ANATOMY OF THE SHIP

THE BATTLESHIP *SCHARNHORST*

Complete with more than **600 scale drawings** and **400 colour 3D views**

Stefan Dramiński

ANATOMY OF THE SHIP

THE BATTLESHIP *SCHARNHORST*

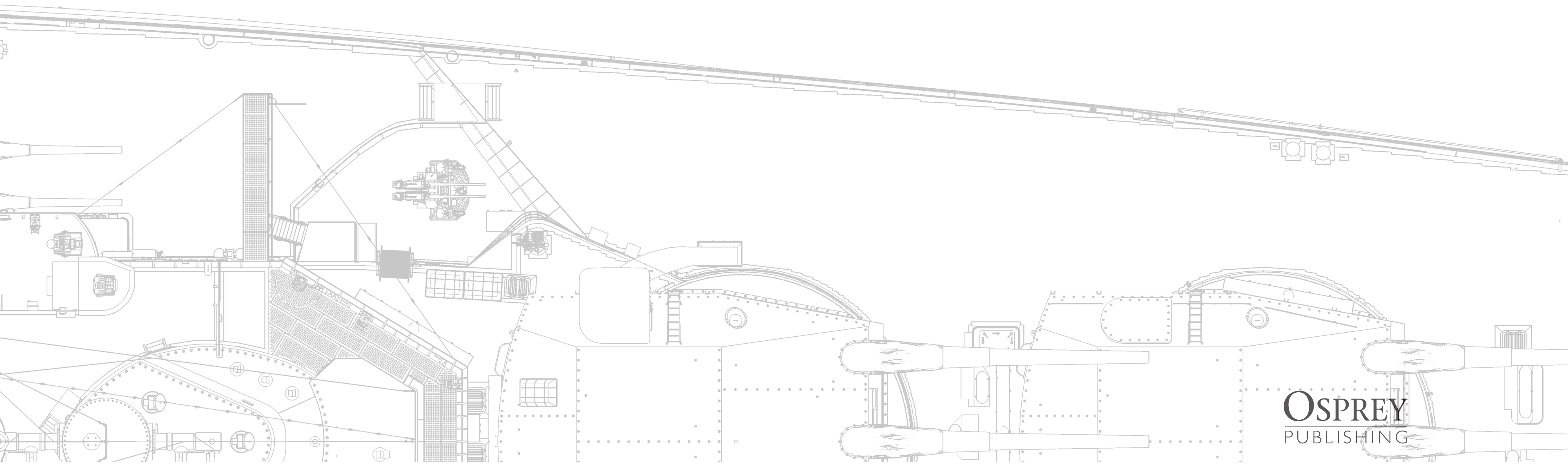

OSPREY PUBLISHING

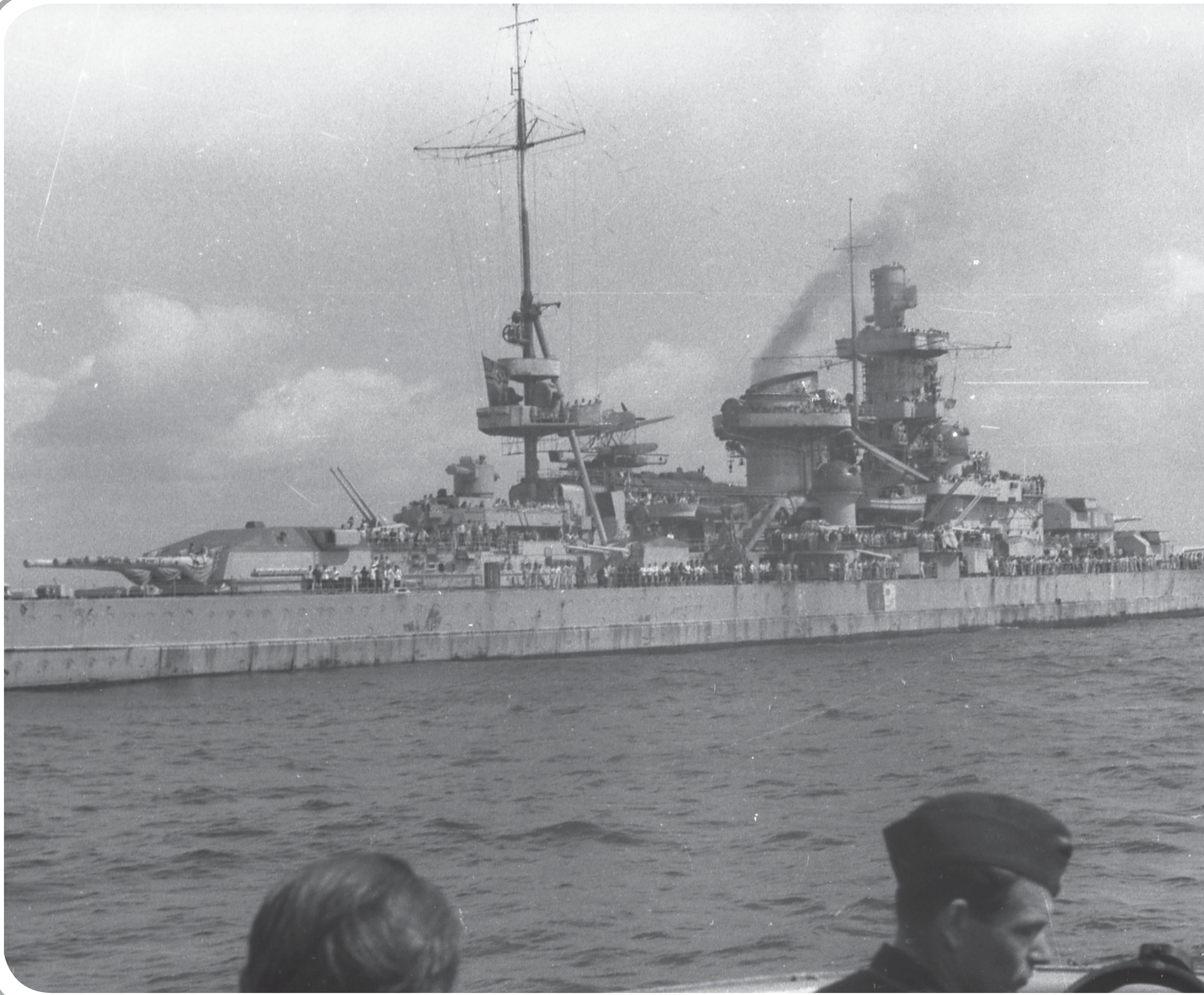

ANATOMY OF THE SHIP

THE BATTLESHIP *SCHARNHORST*

Stefan Dramiński

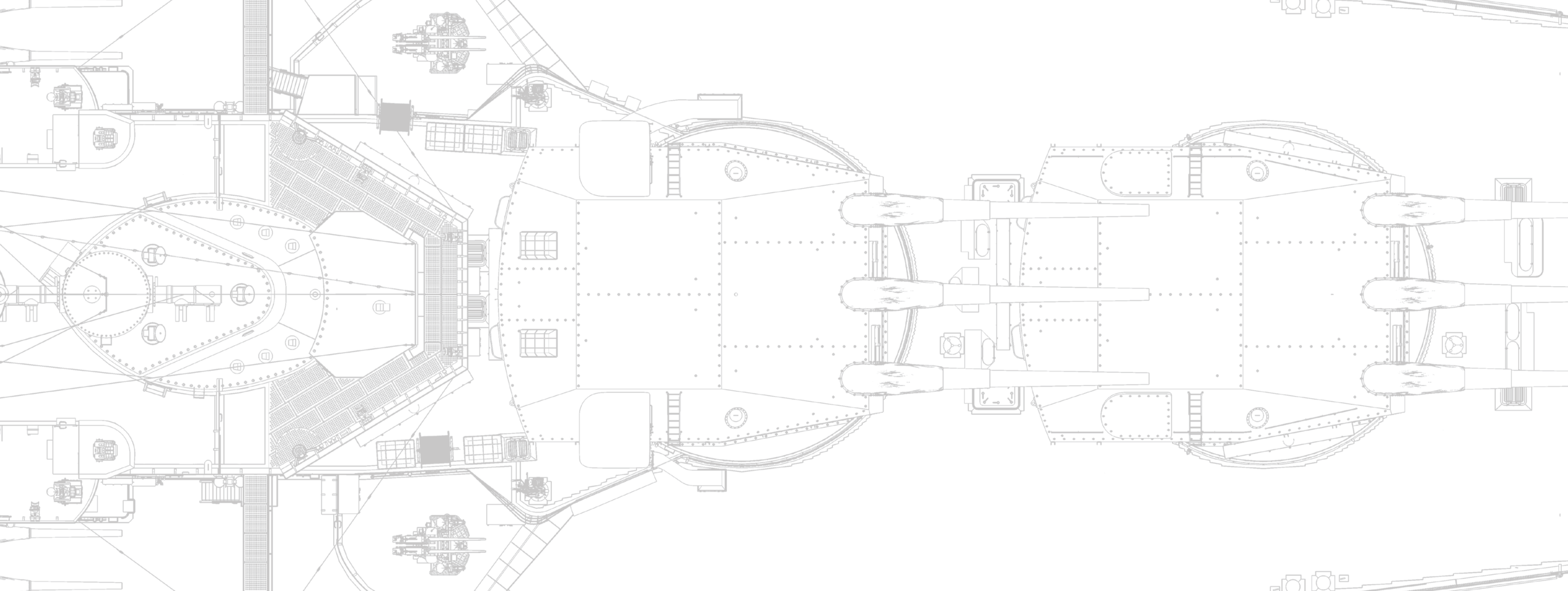

OSPREY PUBLISHING
Bloomsbury Publishing Plc
Kemp House, Chawley Park, Cumnor Hill, Oxford OX2 9PH, UK
1385 Broadway, 5th Floor, New York, NY 10018, USA
29 Earlsfort Terrace, Dublin 2, Ireland
E-mail: info@ospreypublishing.com
www.ospreypublishing.com

OSPREY is a trademark of Osprey Publishing Ltd

First published in Great Britain in 2021

This electronic edition published in 2021 by Bloomsbury Publishing Plc

© Stefan Dramiński, 2021

Stefan Dramiński has asserted his right under the Copyright, Designs and Patents Act, 1988, to be identified as Author of this work.

For legal purposes the Acknowledgements on p. 7 constitute an extension of this copyright page.

All rights reserved. No part of this publication may be reproduced or transmitted in any form or by any means, electronic or mechanical, including photocopying, recording, or any information storage or retrieval system, without prior permission in writing from the publishers.

A catalogue record for this book is available from the British Library.

ISBN: HB 9781472840233; eBook 9781472848420; ePDF 9781472840226; XML 9781472840219

Front cover: illustration © Iwona Paszkowska-Dramińska

Osprey Publishing supports the Woodland Trust, the UK's leading woodland conservation charity.

To find out more about our authors and books visit www.ospreypublishing.com. Here you will find extracts, author interviews, details of forthcoming events and the option to sign up for our newsletter.

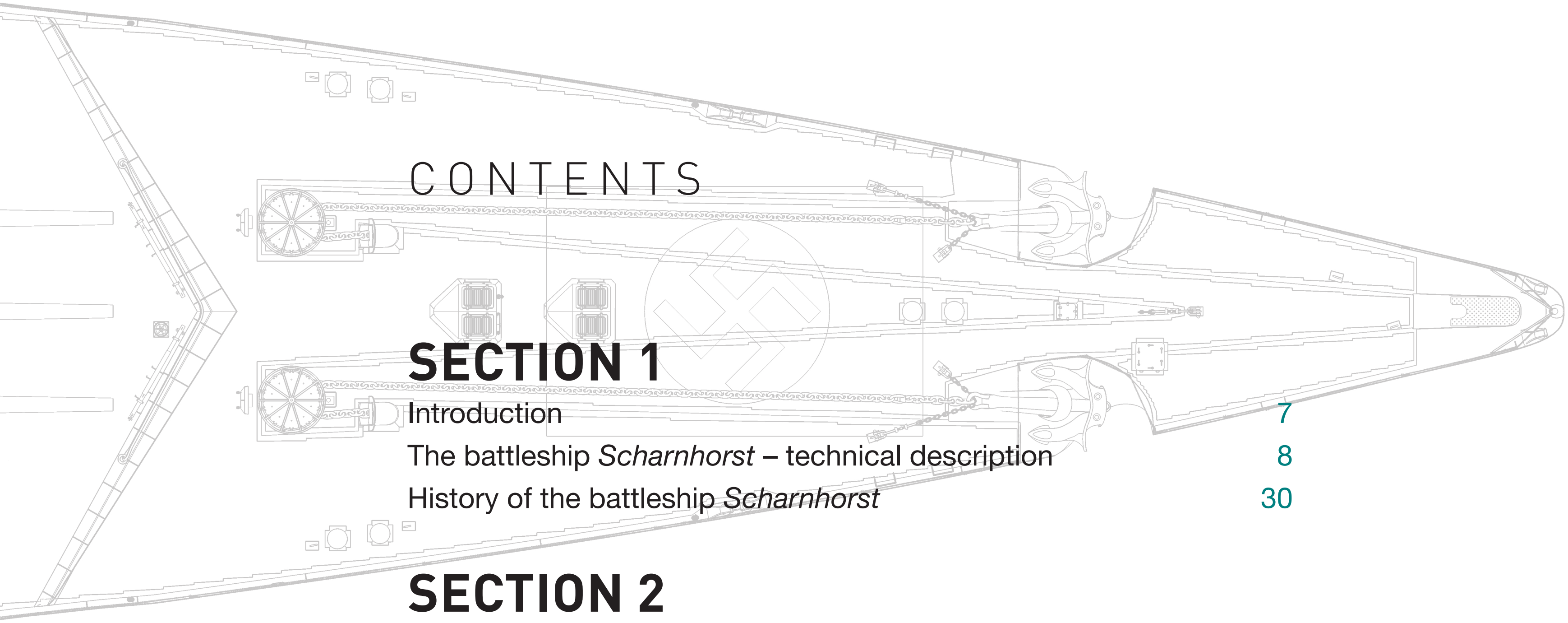

CONTENTS

SECTION 1

Introduction 7

The battleship *Scharnhorst* – technical description 8

History of the battleship *Scharnhorst* 30

SECTION 2

Primary views 48

SECTION 3

The drawings 78

- A General arrangements 78
- B Hull structure 96
- C Superstructure 122
- D Rig 174
- E Armament 194
- F Fire control 256
- G Fittings 278
- H Aircraft 318
- I Boats 328

Bibliography 336

INTRODUCTION

The battleship *Scharnhorst* was one of the most famous German ships that served in World War II. Her construction, which started in 1936, was an important step of the effort to rebuild Germany's surface fleet following the Treaty of Versailles. *Scharnhorst*'s design incorporated strong propulsion and adequate armour protection. However, the calibre of her main armament was not big enough, which proved to be a serious limitation.

Scharnhorst turned out to be the vessel with the richest service record out of all German capital ships of World War II. For the most part of her career, she operated with her sister ship *Gneisenau*. The *Ugly Twins*, as nicknamed by the British, earned their fame in numerous combat actions in the early stages of the war. These included the sinking of the auxiliary cruiser HMS *Rawalpindi* (November 1939), an inconclusive artillery duel with the battlecruiser HMS *Renown* during the German invasion of Norway (April 1940), and the sinking of the aircraft carrier HMS *Glorious* together with her escorting destroyers HMS *Ardent* and HMS *Acasta* (June 1940). Between January and March 1941, *Scharnhorst* and *Gneisenau* conducted a merchant raiding mission in the Atlantic. They managed to sink or capture 22 ships and successfully avoided encounters with overwhelming forces of the Royal Navy. In February 1942 the two German battleships, accompanied by the heavy cruiser *Prinz Eugen* and some escorts, succeeded in escaping home to Germany through the narrow English Channel in the immediate vicinity of British bases. This was an embarrassing blow to the Royal Navy and its prestige suffered greatly.

After *Gneisenau* received lethal damage during an air raid, *Scharnhorst* was relocated to Norway. She met her end during the Battle of the North Cape (December 1943), when she fell victim to the shells and torpedoes of a vastly superior British force. *Scharnhorst* sank in icy Arctic waters with a great loss of life. Only 36 of her 1,968-strong crew survived.

I would like to express my gratitude towards the following people who kindly helped me with my research for this book: Jan Dohmen, Shawn Pringle, Marek J. Murawski. Special thanks goes to my friend Antonio Bonomi who not only provided valuable source materials but also shared his knowledge and gave advice on several occasions. As with every major project, I received a lot of assistance from my wife Iwona. She did the meticulous job of designing the layout of the book and prepared the front cover artwork.

It has to be stressed that this book is not intended to promote Nazi ideology in any way. The only purpose of depicting symbols associated with the Third Reich is for maintaining historical accuracy.

Stefan Dramiński
Toruń, Poland, September 2020

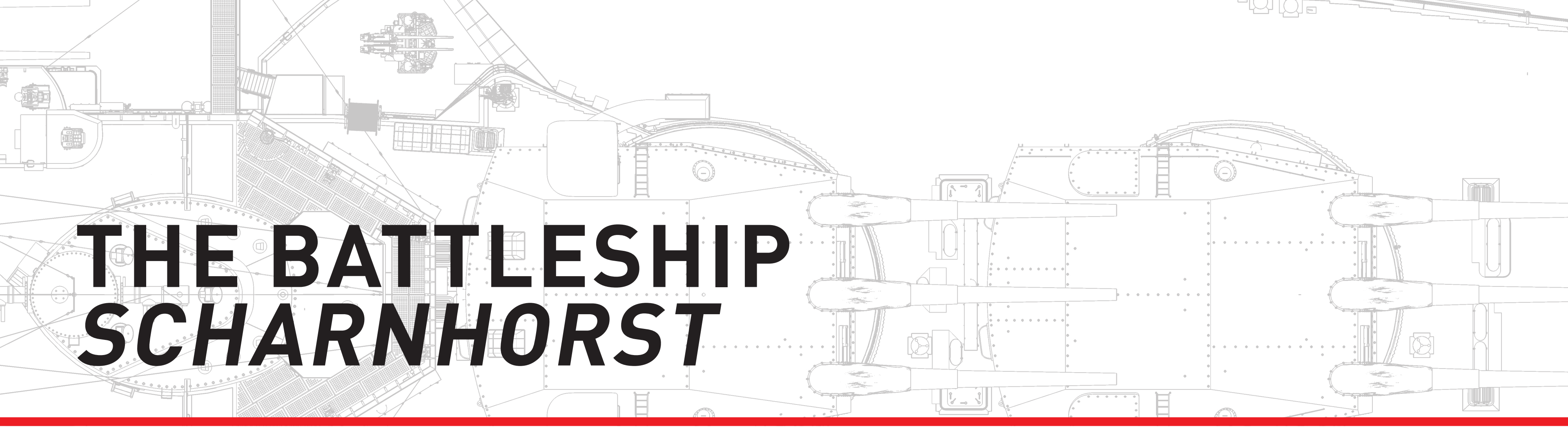

THE BATTLESHIP *SCHARNHORST*

The Treaty of Versailles, signed in 1919, imposed serious limitations on the Reichsmarine (German Navy). It was only allowed to retain a handful of obsolete ships, and new ones were not to exceed a displacement of 10,000 tons. This did not discourage the Germans, who soon started design work on their first capital ships. The result was the Deutschland class – three vessels with an official displacement within the limit, commissioned from 1933 to 1936. Their design was far from standard, but was successful in fitting six relatively powerful 28cm guns within a small hull.

The French response to the German vessels was the Dunkerque class – two fast battleships armed with eight 33cm guns each. In the meantime, with the rise of Adolf Hitler to power, German plans for fleet expansion became more ambitious. Although officially it was forbidden, from spring 1933 German designers started discussing new ships that could be a match for the *Dunkerque*. The ships with the working names *D* and *E* were supposed to be immune to the French 33cm projectiles at most battle ranges and have a high maximum speed. For the main armament, several gun calibres were considered, including 28cm, 30.5cm and 33cm. The final decision was to arm the ships with six 28cm guns in two triple turrets, a solution far from ideal.

On 25 January 1934 battleship *D* was ordered from Reichsmarinewerft (renamed Kriegsmarinewerft in 1935) in Wilhelmshaven, and battleship *E* was ordered from Deutsche Werke in Kiel. Alternative names of the vessels were *Ersatz Elsass* and *Ersatz Hessen* at this stage, after the old pre-dreadnoughts they were meant to replace. In the meantime, Admiral Erich Raeder, Commander in Chief of the Reichsmarine, was still grossly dissatisfied with the new ships' armament. He arranged a meeting with Hitler on 27 June 1934 and managed to convince the *Führer* to modify the design. As a result, work that had already begun in both shipyards was abandoned. It took some months to agree the new final design. At the beginning of 1935, armament layout was still under discussion, with proposals ranging from nine 28cm to six 38cm guns. It was realized that producing a larger gun would delay the vessels' construction by some considerable time, whereas the 28cm model was ready to be used. Finally, it was decided to mount nine 28cm guns in three triple turrets, but with a possibility to replace them with three twin turrets with guns of a larger calibre. Special arrangements were made to ensure the barbettes' diameters could be matched.

High-pressure steam turbines were chosen as the battleships' propulsion. Diesel engines used in the preceding Deutschland class proved to be problematic: they were plagued with frequent failures and took up more space and weight for the same output power of a turbine. Thus, it was considered better to mount steam turbines in the new larger ships, although they were neither as economic on fuel nor did they have the advantage of a quick start-up.

Battleship *D* was laid down on 15 June 1935 and launched on 3 October 1936, whereas battleship *E* was laid down on 6 May 1935 and launched on 8 December 1936. It was decided to name them

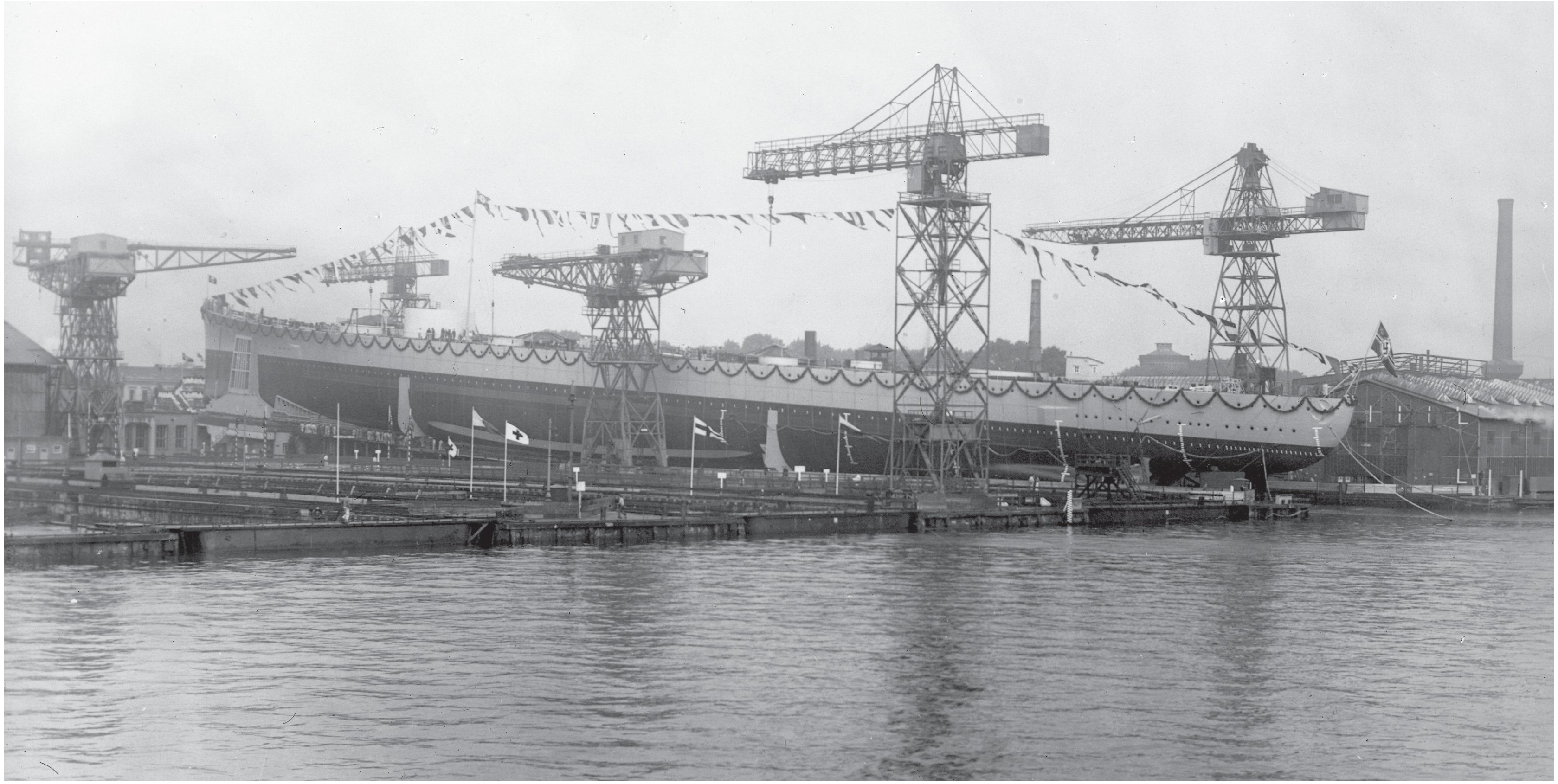

Kriegsmarinewerft shipyard, Wilhelmshaven, 3 October 1936. On this day the hull of *Scharnhorst* was launched. Most of the attendants of the ceremony are gathered around a small tribune near the bow. At this stage of the construction, the only elements visible above the upper deck are the main and secondary artillery barbettes. Note that the main armour belt is not yet fitted, but the fore and aft boundaries of its extent are clearly visible.
(Bundesarchiv, Bild 134-B0845, photo: o.Ang.)

Scharnhorst and *Gneisenau* respectively, in honour of Prussian generals of the Napoleonic wars. Total construction cost of each vessel was over 140 million Reichsmark.

It is often argued that due to their specification, *Scharnhorst* and *Gneisenau* should be classified as battlecruisers rather than battleships. By definition, a battlecruiser is a ship similar to a battleship, with the exception that one of her attributes (most often armour protection) is sacrificed in order to provide high speed. In the case of the *Scharnhorst*, armour layout was no worse than in contemporary foreign battleship designs, but the calibre of her main armament was indeed significantly smaller than any other vessel classified as a battleship at the time. Despite this, in the Kriegsmarine (the Reichsmarine was renamed the Kriegsmarine in 1935) the *Scharnhorst* class ships were referred to as *Schlachtschiffe* (battleships).

HULL STRUCTURE

The empty hull of *Scharnhorst* had the weight of 8,310 metric tonnes (excluding armour plates). Two types of construction steel were used: St 52 and St 42. The hull was almost entirely welded; rivets were only used in the most critical joints between the armour plates. *Scharnhorst* class vessels were one of the first capital ships in the world in whose construction welding was used to such extent. This approach enabled the engineers to save a lot of weight.

Principal Characteristics of *Scharnhorst*	
Displacement (standard)	31,552 tonnes (1935 project) 31,847 tonnes (1943)
Displacement (full load)	37,224 tonnes (1935 project) 38,092 tonnes (1943)
Displacement (maximum)	37,822 tonnes (1935 project) 39,017 tonnes (1943)
Length (overall)	229.8m (01.1939) 235.4m (after mid-1939)
Length (waterline)	226m
Beam (waterline)	30m
Draught (at standard displacement)	8.69m
Draught (at full load displacement)	9.90m
Boilers	12 Wagner-type high-pressure superheated 3-drum boilers (450°C, 58atm)
Turbines	3 Brown-Boveri turbine sets
Machinery output	125,000shp (designed) 160,050shp (maximum)
Speed	31 knots (at designed machinery output) 31.65 knots (at maximum machinery output)
Fuel capacity	6,108 tonnes
Electrical plant output	4,120kW
Range	9,020nm at 15 knots 7,100nm at 19 knots 2,210nm at 31 knots
Armament	9 x 28cm SK C/34 (3 x III) 12 x 15cm SK C/28 (4 x II, 4 x I) 14 x 10.5cm SK C/33 (7 x II) 16 x 3.7cm SK C/30 (8 x II) 10 x 2cm C/30 (10 x I; 1939–1940) 18 x 2cm C/38 (10 x I, 2 x IV; 1941) 34 x 2cm C/38 (10 x I, 6 x IV; 02.1942) 30 x 2cm C/38 (10 x I, 5 x IV; 1942–1943) 6 x 53.3cm torpedo tube (2 x III; 1941–1943) 2 x WBD depth charge rack (1941–1942)
Armour	Armour belt: 320mm tapering to 170mm below Decks: upper deck 50–80mm; main armour deck 80–95mm, main armour deck slopes 105–110mm Torpedo bulkhead: 45mm Fore and aft transverse bulkheads: 150–200mm Main artillery turrets: front 360mm, sides 110–200mm, rear 170mm, roof 100–150mm Main artillery barbettes: 350mm Secondary artillery turrets: front 140mm; sides and rear 60mm, roof 30–50mm Secondary artillery turret barbettes: 150mm Conning tower: sides 350mm, roof 200mm
Aircraft	3 x Arado Ar-196 floatplanes
Complement	1,669 (56 officers and 1,613 men; 1939) 1,968 (60 officers and 1,908 men; 1943)

Transverse bulkheads divided the hull into 21 watertight sections. They were designated with Roman numbers, I at the stern to XXI at the bow. Frame number 0 marked the aftermost point of the waterline, whereas frame 226 was at the extreme bow (several more frames were

Scharnhorst shortly after being commissioned, early 1939. Some features of her original configuration are distinct in this photo: straight stem, side anchor hawses, short-capped funnel with mainmast fitted to its rear, as well as two aircraft catapults, one of them positioned on the roof of main artillery turret C. Note the appearance of the SL-6 AA director just to the rear of the funnel. Its triaxially stabilised spherical shield is tilted to the side, which indicates that the director was not yet in operation at the time. (Bundesarchiv, Bild 134-B0002, photo: o.Ang.)

added when the bow was rebuilt). The battleship's double bottom had the height of 1.7m and stretched between frames 21.5 and 229.5. The spaces inside were used for fuel and water tanks. Overall, the hull had a very dense compartment division, giving *Scharnhorst* a capability of staying afloat with serious battle damage. A pair of bilge keels were fitted to both sides of the hull between frames 75.5 and 143, improving the vessel's stability.

Initially, the ship was built with a low straight bow. Soon after *Scharnhorst* was commissioned, it turned out that even at moderate speed and weather conditions, vast amounts of water were spilling through the forecastle, making the fore main artillery turrets difficult to operate and potentially causing malfunctions. For this reason, during the refit of mid-1939 the bow was rebuilt in a clipper shape, the so-called 'Atlantic stem', increasing the hull's overall length by more than 5m.

ARMOUR

Scharnhorst's designers emphasised providing the vessel with very strong armour protection. The resulting system, consisting of vertical, horizontal and sloped armour plates was aimed at stopping enemy projectiles, bombs and torpedoes from damaging the vitals of the ship. The total weight of the armour was 14,245 tonnes, which was over 45 per cent of *Scharnhorst's* standard displacement.

Depending on a plate's location and purpose, it was built from one of the following types of armour:

- KC (Krupp cementite) – face hardened armour steel. Its outer layer's hardness was extremely high and reached 670 on the Brinnel scale. This decreased through the depth of the plate in order to prevent cracking when hit by a projectile. This type was used for most vertical armour plates: the armour belt, the fore and aft armoured bulkheads, the conning tower, turrets and barbettes;
- Wh (Wotan hart) – homogeneous armour steel, characterized by a tensile strength of 85–95kg/mm^2, strain of 20 per cent and

yield point of 50–55kg/mm^2. This type was used for armoured deck plates and side armour plates fore and aft of the citadel;

- Ww (Wotan weich) – homogeneous armour steel, characterized by tensile strength of 65–75kg/mm^2, strain of 25 per cent and yield point of 38–40kg/mm^2. This type was used for longitudinal torpedo bulkheads.

It was possible to weld both the Wh and Ww plates. These types were used extensively for the first time in a German warship.

A sailing boat passing the battleship moored to a buoy, Kiel, around August 1939. Following the major reconstruction that was carried out during the summer, *Scharnhorst's* appearance changed significantly. The curved stem and new mainmast are most noticeable. Note that fore boat booms and accommodation ladders are rigged. Also, the port side main crane and the small crane serving turret C catapult are in operation.
(Bundesarchiv, DVM 10 Bild-23-63-46, photo: A. Klein)

The key element of *Scharnhorst*'s armour layout was the citadel, an armoured box without a base. It covered the most vital parts of the ship, primarily the ammunition magazines and machinery (hull sections III–XVIII). The concept behind *Scharnhorst*'s design was based on the prediction that artillery duels would likely be fought at relatively short ranges (due to the North Atlantic's typically poor visibility conditions). That is why a great emphasis was put on protection against flat-trajectory projectiles rather than long-distance plunging fire.

Protection of the hull's sides was provided by the 4.5m-high armour belt. This extended from in front of turret A's magazines to the rear of turret C's magazines. The thickness was 320mm for the top 70 per cent of the belt's height, then started tapering to 170mm at the bottom.

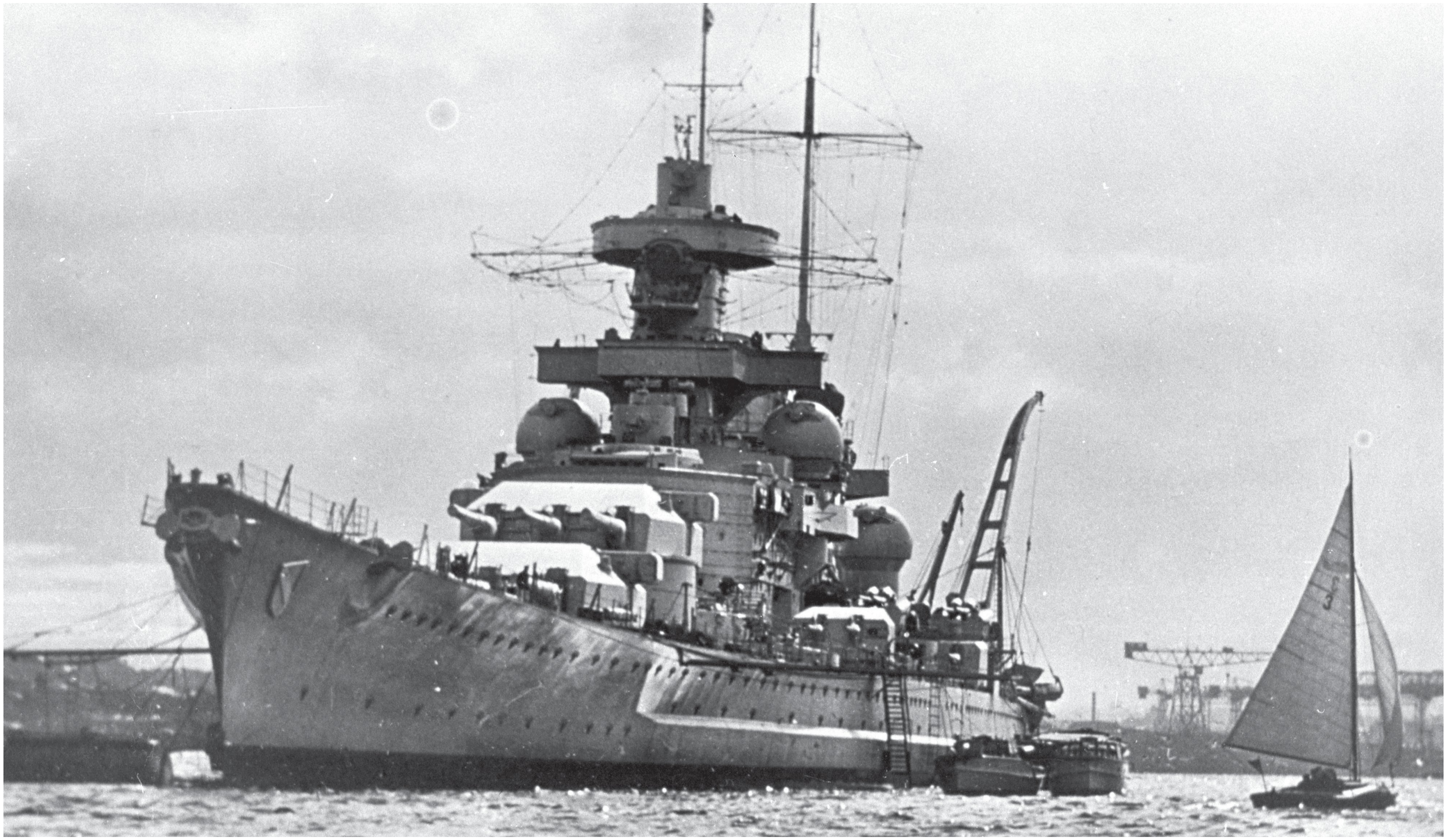

Towards the bow and the stern, the armour belt was inclined outwards, thus increasing its resistance. Between the armour belt and the hull's plating there was a shock-absorbing layer of teak wood. Some side armour was also present outside the citadel. Rudder compartments were protected by 90mm plates, whereas the bow section had 70mm plates.

At the front and the back, the citadel was closed with transverse armoured bulkheads. The fore armoured bulkhead was 150mm thick, whereas the aft armoured bulkhead was 200mm thick. An additional 150mm transverse bulkhead was fitted at the aft boundary of the steering gear compartments.

A photograph taken at approximately the same time as the previous one. Steaming at low speed during post-refit trials, *Scharnhorst* shows her new bow – the so-called Atlantic stem – and her new tall mainmast behind the aircraft hangar. Arado Ar-196 floatplanes are sitting on both catapults. A spare bow anchor and ship's crest are still present in this view, but they were both removed around a month later. (Bundesarchiv, DVM 10 Bild-23-63-12, photo: A. Klein)

Scharnhorst's horizontal protection was divided into two layers. The lighter upper armoured deck was meant to decap and set off the fuse of an incoming projectile before it reached the main armour deck below, thus reducing the risk of the shell exploding inside one of the battleship's vital compartments. This layout was controversial as two separate decks gave less resistance (both to projectiles and bombs) than would be provided by one thicker deck of the combined weight.

The upper armoured deck covered most of the length of the battleship. Its thickness was 50mm, increasing to 60mm around main artillery barbettes and 80mm around secondary artillery barbettes. The main armoured deck, being the upper cover of the citadel, was located two levels below (at the intermediate deck). It had the classic 'turtle back' shape, with flat centreline part and outboard slopes. The slopes were 105mm thick, increasing to 110mm around main artillery turrets.

Similarly, the flat part consisted of 80mm plates above the machinery, and 95mm plates above the magazines. Steering gear was protected by 110mm armour. The height of *Scharnhorst's* boilers created a weak spot in the armour system. In order to fit the boilers below the main armoured deck, a step in this deck had to be created in the boiler room sections. This discontinuity made it easier for incoming steep trajectory shells to penetrate.

Scharnhorst's anti-torpedo system was designed to withstand an explosion of 250kg TNT. Its main elements were the 45mm thick torpedo bulkheads extending along both sides of the citadel. The bulkheads were riveted to the ship's bottom and continued upwards to the riveted joints with the armoured slopes, inclined about 10° outwards. Made of very soft Ww steel, the bulkheads were meant to absorb the force of torpedo warhead's explosion, bend and remain watertight rather than crack and create leaks. The space between the ship's sides and the torpedo bulkheads were divided and used for trim tanks, as well as for fuel and water bunkers. The system's depth was regarded as sufficient amidships. However, it fell significantly towards the fore and aft main artillery turrets, where the hull became narrower.

The conning tower was the best protected compartment on the ship. Its roof was covered with a 220mm thick plate, while the walls were 350mm thick, reducing to 60mm below the level of the bridge deck. The communications shaft's armour thickness was 220mm. The main fire control post, being very high above the waterline, could not have such strong armour. Its roof was only 30mm thick and the walls were 60mm thick. The aft fire control post was much better protected (roof 50mm; walls 150mm; communications shaft 50mm). The three fire control rangefinders also received armour plates. The roofs of the fore, main and aft rangefinders were 100, 30 and 50mm thick respectively, while their walls had thicknesses of 200, 30 and 100mm respectively.

Port side view of the battleship, November 1939 or shortly after. The most distinctive new feature is the FuMO 22 radar. Its 'mattress' antenna is clearly visible attached to a radar hut on the foretop main artillery rangefinder. Note an Ar-196 floatplane being hoisted by the port side crane.
(Bundesarchiv, 101II-MW-5558-22, photo: Zuber)

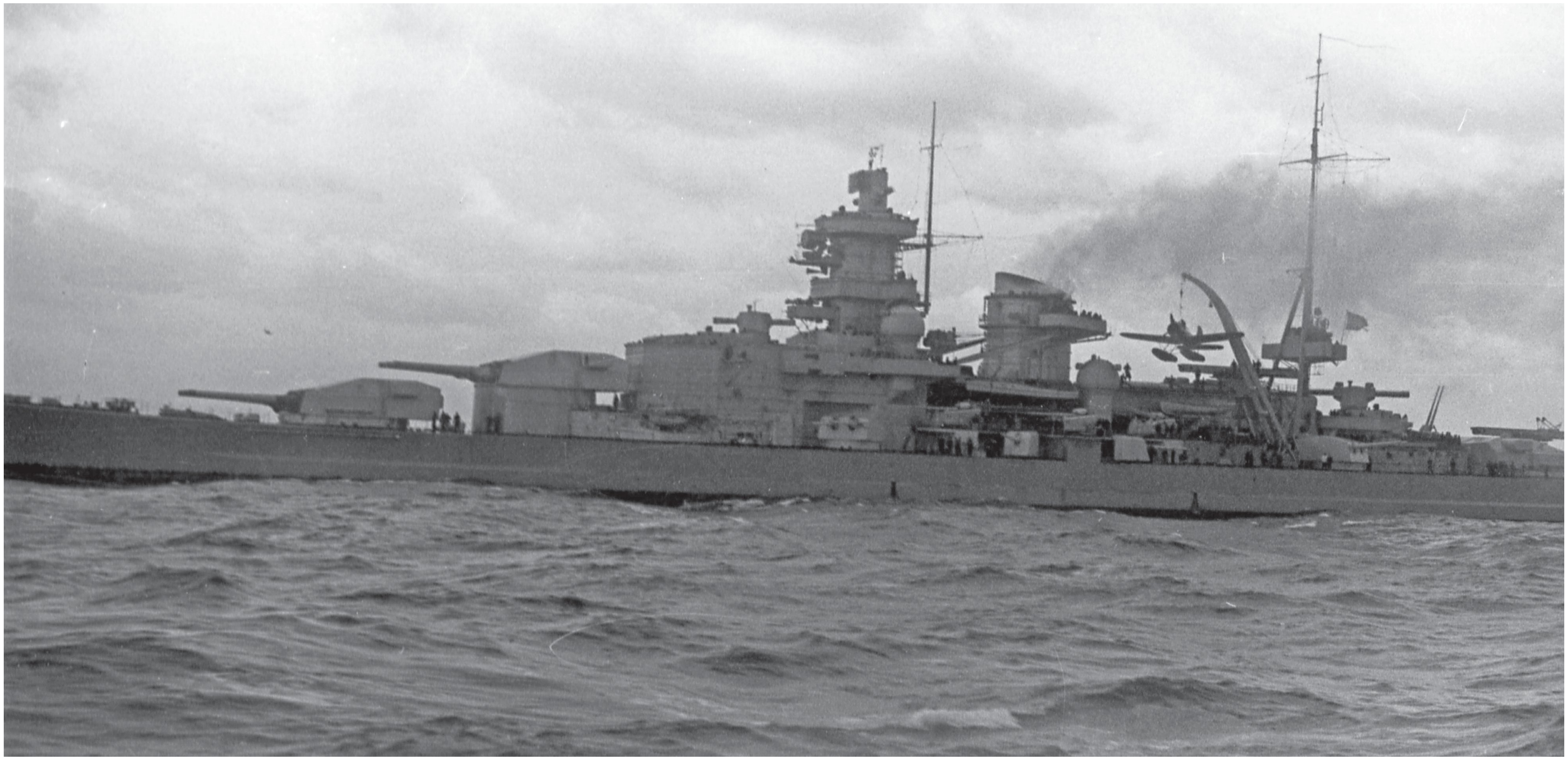

The main artillery turrets were protected very well. Their armour plates had the following thicknesses: front, 360mm; sides, 110–200mm; rear, 170mm; roof, 90–150mm. The conical-shaped barbettes were 350mm thick. The secondary turrets were also armoured; their plates were as follows: front, 140mm; sides and rear, 60mm; roof, 30mm (aft plate) and 50mm (fore plate). The secondary artillery barbettes were 150mm thick.

MACHINERY

It was decided that the propulsion of *Scharnhorst* would consist of three steam turbines, each driving a separate propeller shaft. Although a four-shaft system was preferred in most foreign navies, the German solution meant saving weight and easier distribution of machinery within the hull. However, the three-propeller, twin-rudder layout meant poor manoeuvrability, especially in the case of rudder failure. This was an important flaw.

Steam for the turbines was provided by 12 Wagner-type high-pressure superheated three-drum boilers distributed evenly between three separate boiler rooms (sections IX, XI and XII). Delivered by Deschimag, the boilers were capable of producing 55 tonnes of steam per hour. Each boiler had a height of 6.59m, which forced the designers to raise the boiler rooms' ceiling by more than 50cm and thus produce a discontinuity in the armour system. An auxiliary boiler room, used mostly while the ship was in harbour, was fitted in section XIII.

Three sets of Brown-Boveri turbines were located in three turbine rooms in sections VI (centreline) and VIII (port and starboard). Each set consisted of the following elements:

- high pressure turbine (*Hochdruckturbine* or *HD*, 5,100 turbine revolutions per minute (rpm));
- intermediate pressure turbine (*Mitteldruckturbine* or *MD*, 3,150 turbine rpm);
- low pressure turbine (*Niederdruckturbine* or *ND*, 3,160 turbine rpm);
- high pressure astern turbine (*Hochdruck-Rückwärtsturbine* or *HD-Rw*);
- low pressure astern turbine (*Niederdruck-Rückwärtsturbine* or *ND-Rw*);
- cruising turbine (*Marschturbine* or *MT*, 2,400 turbine rpm).

Each turbine set drove a shaft with a three-bladed propeller at its end (diameter 4.45m). The system was designed to give an output of 125,000shp, but trials showed that the ship was capable of reaching a maximum of 160,050shp, giving a maximum speed of 31.65 knots. Total weight of the turbines was 970 tonnes.

A lot of electrical power was needed to run all the ship's systems, the most important ones being artillery and fire control drives, ammunition hoists, steering, pumps, lighting, communication, and ventilation. A large degree of redundancy was also necessary for the vessel to perform well in battle. That is why a powerful electrical plant was provided (total output of 4,120kW), divided into five rooms:

- Electrical generator room 1 with two steam generators, 240kW output each (section VI, port side);
- Electrical generator room 2 with two steam generators, 460kW output each (section IX, starboard side);

Boilers	
Evaporation heating surface	425m²
Superheater heating surface	130m²
Air pre-heat surface	800m²
Feedwater pre-heating temperature	200°C
Saturated steam temperature	263°C
Superheated steam temperature	480°C
Operating steam pressure	50atm
Safety valves	58atm
Maximum pressure	63atm
Steam production	127kg per m² heating surface, total 55 tonnes per hour
Capacity	132.4 m³
Weight of boiler with water	55 tonnes
Weight of water inside a boiler	4.5 tonnes

Liquids	
Main heating fuel	6,108 tonnes
Fuel for diesel generators	146 tonnes
Aviation fuel	26 tonnes
Drinking water	471 tonnes
Gear oil	154 tonnes

- Electrical generator room 3 with two steam generators, 460kW output each (section XI, port side);
- Electrical generator room 4 with two steam generators, 460kW output each (section XII, starboard side);
- Electrical generator room 5 with two diesel generators, 300kW output each, and two diesel generators, 150kW output each (section XIII, port side).

Steering was provided by two rudders, their drives fitted on both sides, section I. Their total power was 178kW. In case of an emergency, one drive could run both rudders, and it was also possible to switch to manual steering by the crew. *Scharnhorst* was also equipped with a number of pumps. There were four freshwater firefighting pumps, each of an output of 60m^3 per hour and four saltwater pumps with the same capability. Bilge pumping installation included 13 pumps, 900m^3 per hour each, and three further pumps (60m^3 per hour each). In case of a threat to the ammunition magazines, these could be used to quickly flood them.

ARMAMENT

MAIN ARTILLERY

Political, technical and tactical considerations were taken when choosing *Scharnhorst's* main armament. The final selection was to mount nine 28cm guns in three triple turrets. The bow turrets were named 'A' and 'B', whereas the stern turret was named 'C'. Alternative designations were 'Anton', 'Bruno' and 'Cäsar' respectively, in accordance with the Kriegsmarine signal code. The gun model was 28cm SK C/34 (SK = *Schnelladekanone*, quick loading gun; C = *Construktionsjahr*, year of construction). It was an improved version of the earlier 28cm SK C/28 used in the Deutschland class. Like its predecessor, the C/34 gun proved to be reliable and had excellent combat performance. However, it was understood that the chosen calibre was inadequate for a modern battleship.

The guns were installed in the Drh L C/34 triple turrets (Drh L = *Drehscheiben Lafette*, revolving mount). This model was essentially a replica of the Drh L C/28 turret fitted in the Deutschland class, the only major difference being the much stronger armour protection of the new

28cm SK C/34 gun	
Gun weight	53,250kg
Gun length	14.42m
Number of grooves	80
Chamber volume	180dm^3
Gun recoil	120cm
Rate of fire per barrel	3.5 rounds per minute
Barrel life	300 rounds
Weight of projectile	Armour piercing projectile: 330kg High explosive projectile, nose-fused: 315kg High explosive projectile, base-fused: 315kg
Weight of bursting charge	Armour piercing projectile: 7.84kg High explosive projectile, base-fused: 16.0kg High explosive projectile, nose-fused: 21.8kg
Length of projectile	Armour piercing projectile: 124.5cm High explosive projectile, base-fused: 124.5cm High explosive projectile, nose-fused: 127.3cm
Weight of fore propellant charge in silk bag (*Vorkartusche*)	42.5kg
Weight of main propellant charge	76.5kg
Weight of loaded main propellant cartridge (*Hülsenkartusche*)	119kg
Ammunition stowage per gun	150 rounds
Working pressure	3,200kg/cm^2
Muzzle velocity	890m/s
Range	At 2° elevation: 5,000m At 4.3° elevation: 10,000m At 11.3° elevation: 20,000m At 22.0 ° elevation: 30,000m At 40° elevation: 40,930m
Striking velocity	At 2° elevation: 766m/s At 4.3° elevation: 652m/s At 11.3° elevation: 481m/s At 22.0° elevation: 418m/s
Weight of turret	750 tonnes
Loading angle	+2°
Elevation	Turrets A and C: -8/+40° Turret B: -9/+40°
Elevation rate	8°/s
Train	Turrets A and B: 290° (215°–0°–145°) Turret C: 290° (35°–180°–325°)
Train rate	7.2°/s
Distance between gun axes	275cm

model. The turrets sat inside armoured barbettes on roller paths placed on top of support cylinders. The working levels revolving together included: gunhouse, train mechanism level, machinery level, intermediate level (or two in the case of turret B), propellant handling level and shell handling level. The last two were below the main armoured deck.

15cm SK C/28 gun	
Gun weight	9,026–9,080kg
Gun length	8.2m
Number of grooves	44
Chamber volume	21.7dm^3
Rate of fire per barrel	6 rounds per minute
Barrel life	1,100 rounds
Recoil	37cm
Weight of projectile	Armour piercing projectile: 45.3kg High explosive projectile, base-fused: 45.3kg High explosive projectile, nose-fused: 45.3kg Illuminating projectile: 41kg
Weight of bursting charge	Armour piercing projectile: 0.885kg High explosive projectile, base-fused: 3.06kg High explosive projectile, nose-fused: 3.89kg
Length of projectile	Armour piercing projectile: 55.5cm High explosive projectile, base-fused: 67.89cm High explosive projectile, nose-fused: 65.5cm Illuminating projectile: 57.85cm
Weight of propellant charge	14.15kg
Weight of loaded propellant cartridge	23.5kg
Length of propellant cartridge	86.5cm
Ammunition stowage per gun	150 rounds
Working pressure	2,850kg/cm^2
Muzzle velocity	875m/s
Range	At 35° elevation: 22,000m At 40° elevation: 23,000m
Weight of turret/mount	Dopp L C/34 twin turret: 120,000kg MPL/28 single mount: 26,710kg
Loading angle	+3°
Elevation	Dopp L C/34 twin turret: -10/+40° MPL/28 single mount: -10/+35°
Elevation rate	Dopp L C/34 twin turret: 8°/s MPL/28 single mount: 1.04°/s
Train rate	Dopp L C/34 twin turret: 9°/s MPL/28 single mount: 1.09°/s
Distance between gun axes	Dopp L C/34 twin turret: 175cm

Depending on the nature of the target, the loaded projectile could be selected from the following types: *Panzersprenggranate* (armour piercing); *Sprenggranate mit Bodenzünder* (high explosive, base-fused); and *Sprenggranate mit Kopfzünder* (high explosive, nose-fused). The propellant charge was divided into *Vorkartusche* (fore charge in silk bag) and *Hülsenkartusche* (main charge in brass case). Magazines of the propellants (upper platform deck) and projectiles (middle platform deck) were placed next to the turrets' working levels. Shells and propellants were transported in horizontal position in hydraulically (or manually in case of emergency) powered hoists. Auxiliary electric hoists were also provided with an option of manual operation. Telescopic chain rammers loaded shells and propellants into the guns. Again, these could be hand-operated too.

When a full three-gun salvo from a turret was fired, the middle gun was delayed by 10 to 20 milliseconds in order to minimize the effect of the gun blast on neighbouring barrels and thus maintain a low dispersion. Empty propellant cases were ejected from the turret through openings in the gunhouse floor at the back. Electric fans extracted gases and smoke via ducts to the exhausts in the rear plate.

The main and auxiliary train drives, as well as the auxiliary gun elevation drive were electric. Power for the main gun elevation drive was provided by electric-driven hydraulic pumps. Each gun had its own cradle and could be elevated independently.

Each turret was equipped with a 10.5m rangefinder for local fire control. When it turned out that the rangefinder in turret A could not be effectively used due to seawater and spray, it was removed and openings in the turret were sealed (December 1941–January 1942). The turrets also featured observation periscopes on their side slopes and sights with sliding shields in their front plates.

SECONDARY ARTILLERY

The design of *Scharnhorst* allowed for a strong battery of secondary guns. Their sole purpose was to provide a measure of defence against enemy light forces, like destroyers or torpedo boats. It was decided to use the successful 15cm SK C/28 guns, earlier fitted in the Deutschland

class. Their primary drawback was that they were not designed to serve as an anti-aircraft weapon. As World War II progressed, aircraft rapidly became the primary threat to warships and implementing a dual-purpose gun, as did the Royal Navy and US Navy, would have been a wiser idea.

The 12 15cm guns on board *Scharnhorst* were fitted into two completely different types of mountings. Eight of the guns were installed inside four well-armoured Dopp L C/34 twin turrets, positioned on both sides of fore and aft superstructures. The remaining four guns had much simpler lightly armoured MPL/28 single pedestal mounts. They were placed near the upper deck edges amidships.

The armoured barbette of the Dopp L C/34 twin turret stood directly on the main armoured deck, with several working levels revolving together inside. These included the gunhouse platform, the train mechanism level,

Wilhelmshaven base, Einfahrt III, 27 February 1940. Because of the extremely low temperatures, German warships performed hardly any movement or training in the winter of 1939/1940. The mainmast of a destroyer is visible above *Scharnhorst's* turret C.
(Bundesarchiv, 101II-MW-0269-05, photo: Schieck)

the machinery level, the workshop level and the ammunition handling level, the last one positioned below the main armoured deck. The train drive of the turrets was electric, and the gun elevation was hydraulic with the possibility of operating it by hand in emergencies.

The MPL/28 mount had a much lighter armour than the turrets, and it was open at the rear. The crew was partially exposed to enemy fire, and the mount itself was prone to failures since it was not waterproof.

Wilhelmshaven base, March 1940. Moored to a pier, *Scharnhorst* is about to undergo a minor refit. Turret C barrels are elevated to the maximum of +40°. Muzzle plugs can be very clearly seen. Note the presence of a destroyer in the lower left corner of the photograph.
(Bundesarchiv, 101II-MW-5570-03, photo: Kreis)

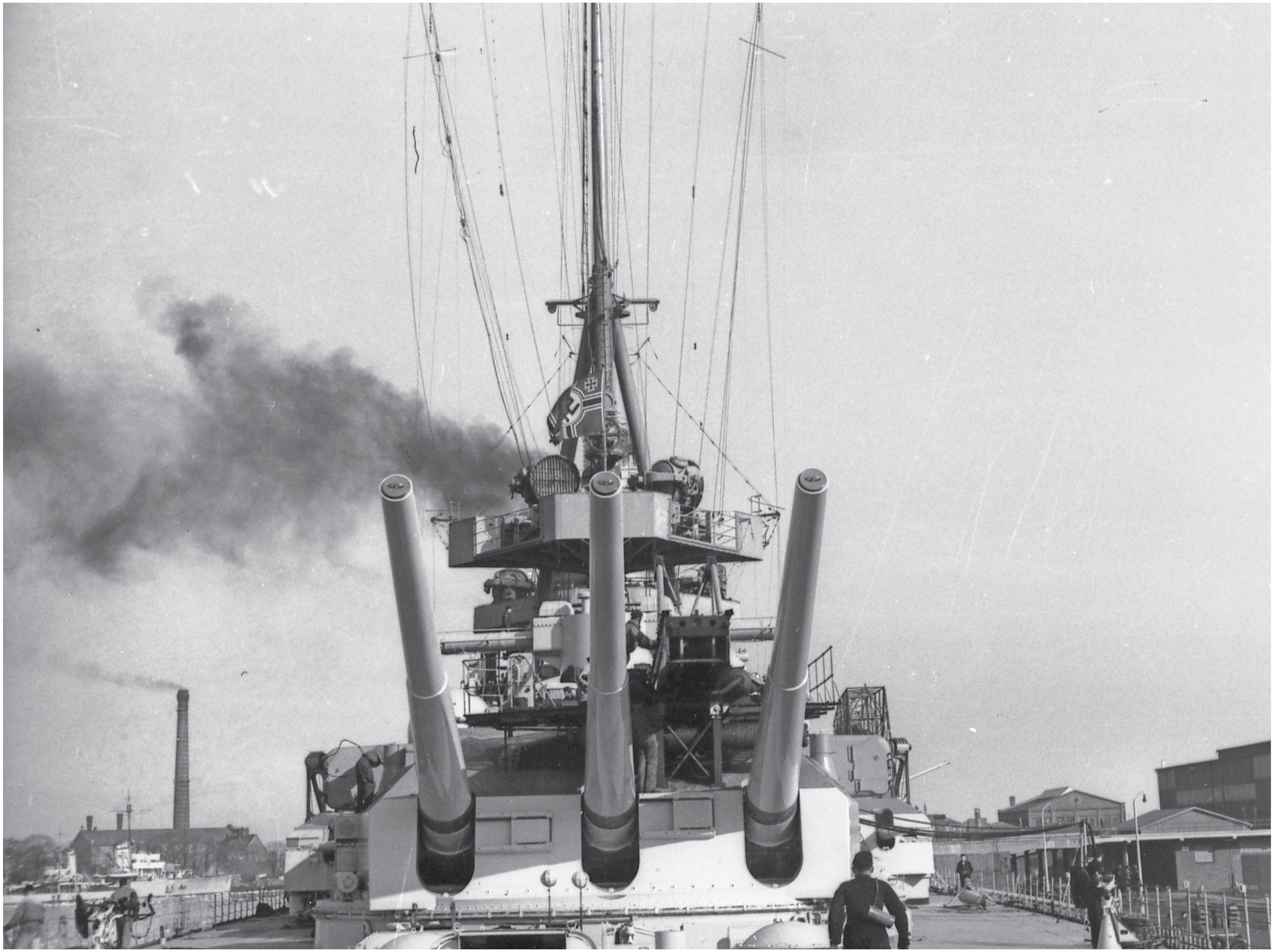

The manually-operated elevation and train were much slower than in the case of the twin turrets, and reloading times also varied. For these reasons, it was difficult to coordinate fire from the twin turrets and the single mounts using a centralised fire control system.

Ammunition for the 15cm guns included several types of projectiles: *Panzersprenggranate* (armour piercing); *Sprenggranate mit Bodenzünder* (high explosive base-fused); *Sprenggranate mit Kopfzünder* (high explosive nose-fused); *Leuchtgeschoß* (illumination). The propellant cartridge was separate. Ammunition magazines were placed below the main armoured deck, in sections VII, X and XIII. Ammunition hoists were an integral part of the twin turret, whereas in the case of the single mounts, 15cm rounds had to be carried manually from the hoists near the ship's centreline.

10.5cm SK C/33 gun	
Gun weight	4,560kg
Gun length	6.84m
Number of grooves	36
Chamber volume	7.31dm^3
Rate of fire per barrel	15–18 rounds per minute
Barrel life	2,950 rounds
Weight of projectile	15.1kg
Weight of bursting charge	5.2kg
Length of projectile	45.9cm
Weight of complete round	26.5kg
Weight of propellant charge	5.2kg
Length of complete round	116.3cm
Ammunition stowage per gun	450 rounds
Working pressure	2,850kg/cm^2
Muzzle velocity	900m/s
Range	At 0° elevation: 17,700m At 80° elevation: 12,500m
Weight of mount	27,350kg
Elevation	-8/+80°
Elevation rate	10°/s
Train	360°
Train rate	8°/s
Cross levelling	-17/+17°
Cross levelling rate	5°/s
Distance between gun axes	68cm

HEAVY ANTI-AIRCRAFT ARTILLERY

Scharnhorst's heavy *Flak* (*Fliegerabwehrkanone*, anti-aircraft gun) battery consisted of 14 10.5cm SK C/33 guns in seven twin mounts. They were all placed on the superstructure deck, six of them symmetrically around the funnel, and the last one on the centreline in front of turret C. The designers succeeded in providing them with very good arcs of fire. The only sector with somewhat poorer coverage was the area right in front of the ship.

The guns were carried in Dopp L C/31 gE mounts. These were originally designed for the earlier 8.8cm guns and adapted for the new kind of armament. The mounts featured triaxial stabilisation to compensate for the ship's roll and pitch. Fuse setters for time-fused AA projectiles were fitted to the sides at the rear of the mounts. For an unknown reason, the centerline aft mount was removed in mid-1939 and replaced with a slightly newer model (Dopp L C/31 d).

3.7cm C/30 gun	
Gun weight	243kg
Gun length	3.074m
Number of grooves	16
Chamber volume	0.5dm^3
Rate of fire per barrel	80 rounds per minute theoretical 30 rounds per minute practical
Barrel life	7,500 rounds
Weight of projectile	0.742kg
Weight of bursting charge	0.365kg
Length of projectile	16.2cm
Weight of complete round	2.1kg
Weight of propellant charge	0.365kg
Length of complete round	51.65cm
Ammunition stowage per gun	2,000 rounds
Working pressure	2,950kg/cm^2
Muzzle velocity	1,000m/s
Range	At 35.7° elevation: 8,500m At 85° elevation: 6,800m
Weight of Dopp L C/30 twin mount	3,670kg
Elevation	-10/+85°
Train	360°
Cross levelling	-19.5/+19.5°

The battleship's 10.5cm mounts were relatively heavy, and their speed of train and elevation was not high enough to effectively follow the ever-faster aircraft of the early 1940s. Remote power control was applied only to a limited extent, and the mounts also lacked sufficient protection, especially to the loaders standing near the breeches. In addition, the crews had to deal with frequent electrical failures caused by seawater pouring into the mount's internal installations.

Ammunition hoists were located in the superstructures and the 10.5cm rounds were carried manually to the mounts by their crews.

MEDIUM ANTI-AIRCRAFT ARTILLERY

For defence against aircraft at medium ranges, *Scharnhorst* was armed with 16 3.7cm SK C/30 guns in eight twin mounts. Four were placed

Wilhelmshaven base, March 1940. The battleship's orchestra is performing a concert on her quarterdeck. A significant change is noticeable in comparison with the previous photograph. The catapult on top of main artillery turret C has been removed, with the cylindrical compressed air tank and support structure still remaining. (Bundesarchiv, 101II-MW-5570-19, photo: Kreis)

2cm C/30 and 2cm C/38 guns	
Gun weight	C/30: 64kg C/38: 57.5kg
Gun length	2.25m
Number of grooves	8
Chamber volume	0.048dm^3
Rate of fire per barrel	C/30: 280 rounds per minute theoretical C/30: 120 rounds per minute practical C/38: 480 rounds per minute theoretical C/38: 220 rounds per minute practical
Barrel life	About 22,000 rounds
Weight of projectile	0.134kg
Weight of bursting charge	0.0395kg
Length of projectile	7.85cm
Weight of complete round	0.32kg
Weight of propellant charge	0.12kg
Length of complete round	20.3cm
Ammunition stowage	At least 22,000 rounds in total
Working pressure	2,800kg/cm^2
Muzzle velocity	835m/s
Range	At 0° elevation: 4,900m At 85° elevation: 3,700m
Weight of mount	SL C/30 single mount: 420kg Vierling L C/38 quadruple mount: 2,150kg
Elevation	SL C/30 single mount: -11/+85° Vierling L C/38 quadruple mount: -10/+90°
Train	360°

on both sides of the aft superstructure (aft night control post level and superstructure deck level). Two were fitted on the lower mast deck level of the fore superstructure. This pair suffered from poor firing arcs. The most unfortunate placement was for the last pair of mounts – on the upper deck on both sides of the fore superstructure. With water regularly pouring onto that deck in heavy seas, operating these mounts must have been very troublesome. This situation was improved in autumn 1940 with the addition of new breakwaters just in front of these positions.

Produced by Rheinmetall, the Dopp L C/30 triaxially-stabilised twin mount was essentially a smaller version of the 10.5cm gun mount, minus its shield. The 3.7cm ammunition had good ballistics but the guns suffered from a very low rate of fire. This was caused by

G7a TI torpedo	
Diameter	53.3cm
Length	7.163m
Weight (including warhead)	1,538kg
Explosive charge	280kg Hexanite
Booster charge	300g Pentrite
Arming distance	150m
Running depth	1–12m
Propulsion	4-cylinder steam engine
Fuel	14.5l Decaline
Air tank capacity	676l
Air tank pressure	200kg/cm^2
Freshwater capacity	57l
Running speed	30 knots / 40 knots
Engine power output	187hp/257hp
Engine revolutions	1,170rpm/1,280rpm
Range	12,000m/7,500m

the semi-automatic loading mechanism. Effective fire against modern aircraft required fully automatic loading, a feature introduced by the Germans in their 3.7cm M42 gun (in service from 1944). Thus, although the C/30 guns were obsolete from the early stages of the war, they were never removed from *Scharnhorst*.

LIGHT ANTI-AIRCRAFT ARTILLERY

For close-up defence, a number of 2cm automatic guns were provided. Initially, these were ten C/30 guns on single pedestal mounts on the upper deck and superstructures. Ammunition was fed from 20-round magazines. As these guns had an inadequate rate of fire, all were later replaced with new C/38 guns (January 1941). The improved model had almost twice the rate of fire.

Additionally, new quadruple 2cm mounts became available. They came in two variants: triaxially stabilised L C/38 mount (designed especially for service on board ships) and biaxially stabilised L C/38 mount (standard mount used by the Wehrmacht). They were nicknamed *Verlinge* (quadruplets), and gave the battleship a much-improved AA fire capability. The amount of 2cm mounts was systematically increased during wartime. Details on how and when these numbers changed can be found in diagrams on page 251.

TORPEDO TUBES

After the termination of Operation *Berlin* (March 1941), Admiral Lütjens recommended that *Scharnhorst* and *Gneisenau* should have torpedo armament fitted. In his view too much time was often wasted sending boarding parties or using artillery to sink merchant ships, putting both vessels under his command in jeopardy. A single torpedo fired from point-blank distance would be a very quick and effective solution. *Scharnhorst* received two triple torpedo tube mounts during her stay in Brest in the summer of 1941. Both these mounts were taken from the light cruiser *Nürnberg*. They fired G7a TI wet-heater torpedoes which were a standard for German surface vessels throughout the war. Torpedo stowage was 14: six torpedoes in the tubes and eight torpedoes in two quadruple containers fitted on the upper deck just behind the torpedo mounts.

Wilhelmshaven base, March 1940. A view of *Scharnhorst's* aft superstructure from the pier. The aft main artillery rangefinder is trained to starboard, its optics facing towards the camera. The barrels of the starboard aft 15cm turret are at maximum depression (-10°). In the upper right corner, an Ar-196 floatplane is visible (T3+NH). With its wings folded, it's in a position ready to be lowered down to the hangar. Crew technical training is being carried out in the foreground. (Bundesarchiv, 101II-MW-5570-16, photo: Kreis)

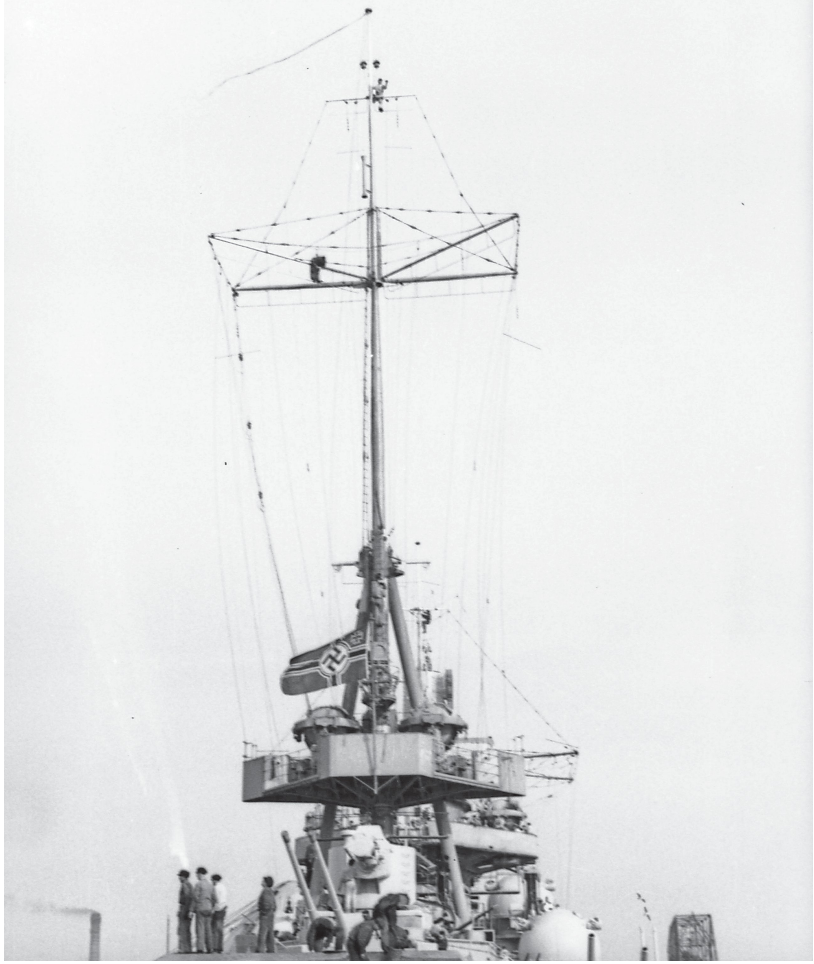

Wilhelmshaven base, March 1940. This view from the quarterdeck shows *Scharnhorst's* mainmast. Its construction was telescopic, and as a result the upper part could be lowered when passing under bridges (like those on the Kiel Canal). A crewman is visible on the upper yard, just below a pair of lights. A pennant is flying from the top, and the Kriegsmarine ensign is flying from its rod slightly above the searchlight platform. (Bundesarchiv, 101II-MW-5570-24, photo: Kreis)

DEPTH CHARGES

In early 1941, shortly before departing for Operation *Berlin*, *Scharnhorst* was equipped with two depth charge racks, each carrying three WBD depth charges. They were placed on the upper deck, a short distance from the stern. Effective use of these weapons was very difficult due to the battleship's limited manoeuvrability. Perhaps it was for this reason that the racks were removed in early 1942.

FIRE CONTROL

There were two separate fire control systems provided for *Scharnhorst*: one for the main and secondary artillery, and the other for the heavy anti-aircraft artillery.

MAIN AND SECONDARY ARTILLERY

Redundancy in fire control was very important when the ship was in battle, which is why each fire control compartment and piece of equipment was provided with a reserve. *Scharnhorst* was fitted with three fire control posts:

- main fire control post on the foretop with a 10.5m rangefinder cupola and three target givers on top;
- reserve fore fire control post in the conning tower with a 7m rangefinder cupola and three target givers on top;
- reserve aft fire control post on top of aft superstructure with a 10.5m rangefinder cupola and two target givers on top.

The rangefinders were of stereoscopic type that was preferred by the Kriegsmarine. In contrast with coincidence rangefinders used by the Royal Navy, they required more skill from the operator but in turn produced more precise results. They were supplemented by radars when these became available. The optical target givers (*Zielgeber C/38 S*) were used to observe enemy vessels and determine their exact bearings. The battleship was also fitted with free-standing similar pieces of equipment (*Zielsäule C/38 S*) – one on each side of the conning tower and aft fire control post.

Data about the target were sent through cables inside armoured communication shafts down to plotting rooms under the main armoured deck. Main plotting room was in section XIV, whereas the auxiliary one was located in section V. Mechanical calculators then worked out the firing solution (elevation and train), using the data from the fire control posts and taking into account other factors like wind, humidity, temperature, own roll and pitch. The information was then sent back to the turrets and a salvo was fired.

In case of a malfunction or battle damage, each main artillery turret could be fired under local control. For this purpose, they were fitted with 10.5m rangefinders (the equipment was later removed from turret A).

For night combat, *Scharnhorst* was equipped with a small 3m rangefinder 3u, located on a centreline platform below the admiral's bridge.

Wilhelmshaven base, March 1940. Crewmen are seen washing the battleship's teak deck abaft main artillery turret C, port side. Fittings visible to the right include vents, skylights and a cylindrical sub-calibre barrel container. Another container is stowed on the turret's side in the background.
(Bundesarchiv, 101II-MW-5570-33, photo: Kreis)

ANTI-AIRCRAFT ARTILLERY

The function of the main anti-aircraft control post on the foretop gallery was to detect and observe air targets, and also spot the accuracy of fire once it was opened. For this purpose, it was planned to fit the platform with four pieces of the ZAG (*Zielanweisegerät* – anti-aircraft artillery target giver). However, it seems that this equipment was not available when *Scharnhorst* was commissioned and at first, she

only carried binocular columns, later replaced with ZAGs (late 1939 and mid-1942).

The information about spotted enemy aircraft was passed to the four AA fire control posts, located on both sides of the fore superstructure and the funnel. Each of them was equipped with an SL-6 director (*Stabilisierter Leitstand* – stabilised director). Range was determined by the means of a 4m rangefinder. The triaxially stabilised director had the form of a spherical dome, hence the nickname '*Wäckeltopf*' ('tilting pot').

In the same way as the main and secondary artillery, the data was sent to main and auxiliary AA plotting rooms under the main armoured deck (sections XIV and V respectively). After the calculators reached a firing solution, it was forwarded directly to the 10.5cm gun mounts.

There was no centralised fire control system for the 3.7cm and 2cm guns. Their crews fired the guns using their own aiming instruments and portable 1m rangefinders.

RADAR EQUIPMENT

Naval radar was among the newest and most secret achievements of German engineers in the second half of the 1930s. The first operational set, called *Seetakt*, was introduced in 1936. It worked on the 386MHz frequency (81.5cm wavelength). *Scharnhorst* received an improved version of the *Seetakt* in November 1939. Its designation was FuMO 22 (*Funkmess Ortungsgerät* – radio range and direction finder). The 4 x 2m mattress-shaped antenna was fitted to a radar hut on top of the main fire control post rangefinder, allowing it to be trained to any angle. Further developments included replacing the set with more advanced apparatus (FuMO 27 and later FuMO 26), as well as adding another set to the aft fire control post rangefinder. FuMO 27 and FuMO 26 worked on the same frequency as their predecessor (386MHz), but offered higher peak output power, greater accuracy (up to 0.25°) and longer range (up to 25,000m). In spite of these advancements, *Scharnhorst's* radars were never fully reliable and did not give the ship an actual blindfire capability.

In addition to active radar, the Germans also developed passive radar detection devices, whose purpose was to warn of approaching enemy vessels and provide information on their distance and bearing. *Scharnhorst's* first detection set was the FuMB 4 *Samos* (*Funkmess Beobachtungsgerät* – radar monitoring device). It was fitted in early 1942 and worked with two types of antennas: FuMB Ant 4 *Sumatra* and FuMB Ant 7 *Timor*. A newer type of antenna (FuMB Ant 6 *Palau*) was introduced in 1943. It was also most probably late in this year that the FuMB 7 *Naxos* detection set was also fitted. It gave the capability to detect radar waves in the centimetre length spectrum and worked with the FuMB Ant 4 *Bali*. However, these devices were not reliable enough to give the *Scharnhorst* adequate warning during her last battle.

SEARCHLIGHTS

The battleship had five 150cm-diameter searchlights fitted, their purpose being illuminating targets at night or in bad weather. They were delivered by Siemens-Schuckertwerke. One searchlight was placed on a platform in front of the ship's foretop, two on the funnel's platform and two on platforms on either side of the aircraft hangar. This last pair

Radars and radar detectors

Antenna designation	Period of service aboard *Scharnhorst*	Purpose	Antenna form	Wavelength
FuMO 22	11.1939–01.1942	Main artillery fire direction active radar	'Mattress' 4 x 2m	81.5cm
FuMO 27	01.1942–11.1943	Main artillery fire direction active radar	'Mattress' 4 x 2m	81.5cm
FuMB Ant 4 Sumatra	01.1942–1943	Passive radar detector	Single tilted dipole on a frame	150-330cm
FuMB Ant 7 Timor	01.1942–11.1943	Passive radar detector	Two rows of vertical and horizontal dipoles on a frame	150-330cm
FuMB Ant 6 Palau	1942–1943	Passive radar detector	A pair of tilted dipoles on a frame	90–250cm
FuMB Ant 3 Bali	1943	Passive radar detector	Small ring with two whips	75–300cm
FuMO 26	11.1943–12.1943	Main artillery fire direction active radar	'Mattress' 6 x 3m, 'Mattress' 6 x 2m	81.5cm

Wilhelmshaven base, March 1940. Another photograph taken on the same occasion. The cameraman moved to the starboard side, just abaft the secondary artillery twin turret. The base of the main crane is visible in the background. Note the large rectangular portholes in the aft superstructure to the left of the photograph. The officers' mess, conference room, commander's cabin and admiral's cabin were the only compartments that were equipped with portholes of this design. (Bundesarchiv, 101II-MW-5570-38, photo: Kreis)

was moved to the mainmast's platform when *Scharnhorst* was refitted in mid-1939.

For an effective remote control, searchlights needed optical directors. Six pieces of this equipment were fitted on the ship: four on the fore superstructure (bridge deck level) and two on the aft superstructure (aft night control post level). This was supplemented with three manually operated signal lamps: two on the wings of admiral's bridge and one on the mainmast's platform.

AIRCRAFT, CATAPULTS AND CRANES

German naval doctrine called for the fleet's heavy units to operate several reconnaissance floatplanes. They would be essential in successful merchant raiding missions, providing information on nearby convoys and enemy warships. Observing the fall of shot from their mother ship, driving off enemy reconnaissance aircraft or bombing the enemy's vessels were additional tasks to perform. Aircraft facilities (catapults, hangars and cranes) took a lot of valuable space on board ships but this sacrifice was accepted.

Initially, tests with the Heinkel He-60 were conducted on *Scharnhorst* in the summer of 1939, but soon afterwards a more modern aircraft type became available – Arado Ar-196 A. It was a fast and well-armed low-wing monoplane, capable of conducting long-range patrols in the open ocean. It remained the standard shipboard aircraft of German heavy ships until the end of the war.

The shipboard aircraft took off with the help of a 14m catapult. Initially, two such catapults were fitted on board. One was resting on a cylindrical support in front of the aft superstructure. It had its own train drive. The other one was placed directly on the roof of main artillery turret C and it could only train with the turret. This latter installation proved to be problematic from the very start. In fact, neither the turret nor the catapult could be operated effectively. The guns' blast was very dangerous to the delicate floatplane, and it was also difficult to manipulate an aircraft in this area using a crane. On the other hand, the weight of catapult and aircraft on the turret roof had a negative effect on its train speed. Under combat conditions, the presence of highly flammable aviation gasoline also posed a threat to the turret itself. For all these reasons, it was decided to permanently remove the catapult from turret C. This was done in March 1940.

To protect aircraft from atmospheric conditions and battle damage, an aircraft hangar was provided. It was placed amidships just behind the funnel. The aircraft was lowered through the roof, which consisted

Specifications of the Arado Ar-196 A-2 two-seat floatplane	
Wingspan	12.4m
Length (overall)	11.0m
Height	4.45m
Power plant	BMW 132K (9 cylinders, 960hp)
Maximum speed	310km/h @ 4,000m
Ceiling	7,000m
Range	1,070km (580 miles)
Empty weight	2,335kg
Loaded weight	3,300kg
Armament	2 x 20mm MG FF in the wings 1 x 7.92mm MG 17 in the fuselage 1 x 7.92mm MG 15 in the rear cockpit (flexible mount) 2 x 50kg bombs in racks under the wings (either SC 50, SD 50 or LC 50F)

of three sliding overlapping sections. Initially, the hangar could accommodate only one Arado floatplane, but this was changed during the mid-1939 refit. The hangar was extended towards the stern. The catapult was moved slightly towards the bow and its cylindrical support removed. From now on, it rested on new diagonal supports constructed in such a way that an additional aircraft could be stored directly under the catapult. Furthermore, the sliding mechanism of the hangar's roof was reversed. Thus, the maximum number of floatplanes that could be carried was increased to three: two in the hangar and one on the catapult.

Once the floatplane's mission was over, it landed in the vicinity of the battleship and was hoisted aboard using one of the two long-arm cranes located on the upper deck below the catapult.

For lowering and hoisting of the ship's boats stowed around the funnel, there were two smaller cranes, one on each side of the fore superstructure, lower mast deck level. Initially, there was also a fifth crane. This was a collapsible construction on the port side of the aft superstructure used to manipulate the aircraft on the roof of turret C. It was removed once that role became redundant (March 1940).

All the aircraft and their crews aboard *Scharnhorst* belonged to the Luftwaffe – 1. Staffel, Bordfliegergruppe 196. Throughout her career, the battleship's aircraft roster changed multiple times. It was quite usual that after the loss of a certain aircraft, the replacement floatplane received the same markings. A compilation of markings used on *Scharnhorst's* shipboard aircraft can be found on page 318.

BOATS

Scharnhorst was equipped with a large number of various boats. These included:

- one admiral's boat (*Admiralsboot*, 11.52m long, weight 8,287kg) for the commander and his staff. It was stowed on the inner cradles on the starboard side of the funnel;
- three transportation boats (*Verkehrsboote*, 11.52m, 7,600kg) for the moving of men and provisions between the ship and the mainland. They were stowed on the outer cradles on both sides of the funnel and on a cradle in front of it;
- one motor pinnace (*Motorpinasse*, 9.2m, 5,600kg). It was stowed on the inner cradles on the port side of the funnel;
- two motor yawls (*Motorjollen*, 7.7m, 3,515kg). They were stowed on cradles on the upper deck below the aircraft hangar. Not kept on board from mid-1939;
- four row cutters, 2nd class (*Kutter Klasse II*, 8.5m, 1,974kg), used for sports and recreation purposes, but also for emergencies. Two were stowed on cradles attached to both sides of the aircraft hangar. A further two were stowed in a ready-to-use position in davits on the upper deck, in front of the forward pair of 15cm turrets. They were removed together with their davits in September 1939;
- two row yawls, 1st class (*Jollen Klasse I*, 6.0m, 1,002kg). They were stowed inside the row cutters on both sides of the aircraft hangar. Not kept on board from around late 1940;
- two row dinghies (*Dingis*, 3.84m, 220kg). They were stowed on cradles on both sides of the aircraft hangar;
- some life rafts and inflatable boats in containers, stowed in various locations on the superstructure. Their number grew systematically during the battleship's service.

OTHER EQUIPMENT

The Germans attached great importance to underwater passive sound detection systems. *Scharnhorst* received two types of such devices. The GHG (*Gruppenhorchgerät*) was an array of 60 microphones on each side of the ship. It detected large ships' propellers from an approximate range of 26,000m. The NHG (*Nahbereichshorchgerät*) was a single microphone for detecting torpedo propellers on each side. Both of these systems were delivered by Atlas Werken and were installed in the fore section of the hull, where the interaction with the ship's own propeller noises was least. Additionally, active sonar oscillators were fitted at the foot of the stem. This device, called *Schallanlage* or *S-Anlage*, had a range of around 15,000m.

Scharnhorst's minesweeping equipment consisted of several paravanes (*Ottergeräte*) stowed in a few locations around the funnel. When deployed, they were towed along the ship's sides from an underwater extendable rod at the stem and small collapsible derricks

on the upper deck. The function of the paravanes was to drag mines' anchor lines and cut them.

Starting from mid-1940, the battleship was equipped with a degaussing cable (designated MES standing for *Magnetischer Eigenschutz* – magnetic self-protection). Running along most of the length of the hull above the waterline, it neutralised the magnetic field of the ship and thus deceived the fuses of magnetic mines.

COMPLEMENT

Each crewmember of *Scharnhorst* was assigned to one of eleven divisions, numbered I to XI:

- Divisions I–IV: artillery crews;
- Division V: craftsmen, cooks, administration workers, etc.;
- Division VI: artillery technicians, ammunition handling crews;
- Divisions VII–X: machinery engineers, technicians, etc.
- Division XI: helmsmen, signal men and radio operators.

When the battleship was commissioned, its complement comprised 56 officers and 1,613 men, totalling 1,669. During the war this number systematically rose due to the need to man the newly fitted AA guns, torpedo tubes and radars. In the last year of her service, *Scharnhorst* had 60 officers and 1,908 men on board, for a total of 1,968.

CAMOUFLAGE

In similar fashion to other heavy vessels of the Kriegsmarine, *Scharnhorst* wore a number of camouflage schemes during her service, some of them unique to this battleship. The colours used were as follows:

- light grey (RAL 7001) – superstructures, armament, etc.;
- medium grey (RAL 7000) – hull above the waterline;
- anthracite grey (RAL 7016) – boot topping, steel decks;
- reddish brown (RAL 8013) – underwater part of the hull;
- natural teak – wooden decks;
- dark grey (RAL 7024) – elements of camouflage, some horizontal surfaces other than decks;
- black – stripes of the camouflage on the hull, swastikas on the deck;
- white – stripes of the camouflage on the hull, circles below the swastikas on the upper deck;
- yellow (RAL 1003) – turret tops;
- carmine red (RAL 3010) – turret tops, banners below the swastikas on the upper deck;
- blue – turret tops.

See the illustrations on pages 48–77 showing the exact appearance of *Scharnhorst's* paint schemes in specific periods of her career.

THE WRECK OF *SCHARNHORST*

Until the late 1990s, there was little interest in the wreck of *Scharnhorst*. The first attempts to locate the sunken battleship were unsuccessful. In autumn 2000 a joint expedition sponsored by the Royal Norwegian Navy and national television broadcasters from Britain and Norway (BBC and NRK respectively) conducted a search in a newly calculated position, some 20 miles north of the area originally reported by the Royal Navy. Norwegian research vessel HU *Svedrup II* managed to locate a large wreck using her multibeam sonar on 3 October. Underwater recovery vessel HNoMS *Tyr* then took over to inspect the site visually using her underwater ROV (Remotely Operated Vehicle). It was soon confirmed without a doubt that the wreck was indeed the *Scharnhorst*.

The battleship lies upside down at a depth of around 300m. The hull is split into two parts lying at some distance from each other. This state was most probably caused by an explosion in the magazines of turret B. The bow part (around 70m long) is completely destroyed, whereas the stern part (some 170m long) shows evidence of multiple projectile and torpedo hits, a result of the severe punishment that *Scharnhorst* received from British ships. A debris field is present around the hull, consisting of objects of various size that detached from the ship during sinking.

The discovery of *Scharnhorst's* wreck did not receive much publicity, at least when compared with the discovery of the *Bismarck*. It seems that mounting a further expedition would be necessary in order to document all the parts of the wreck site in detail and provide information that would enable a better reconstruction of the battleship's last moments on the surface and her sinking.

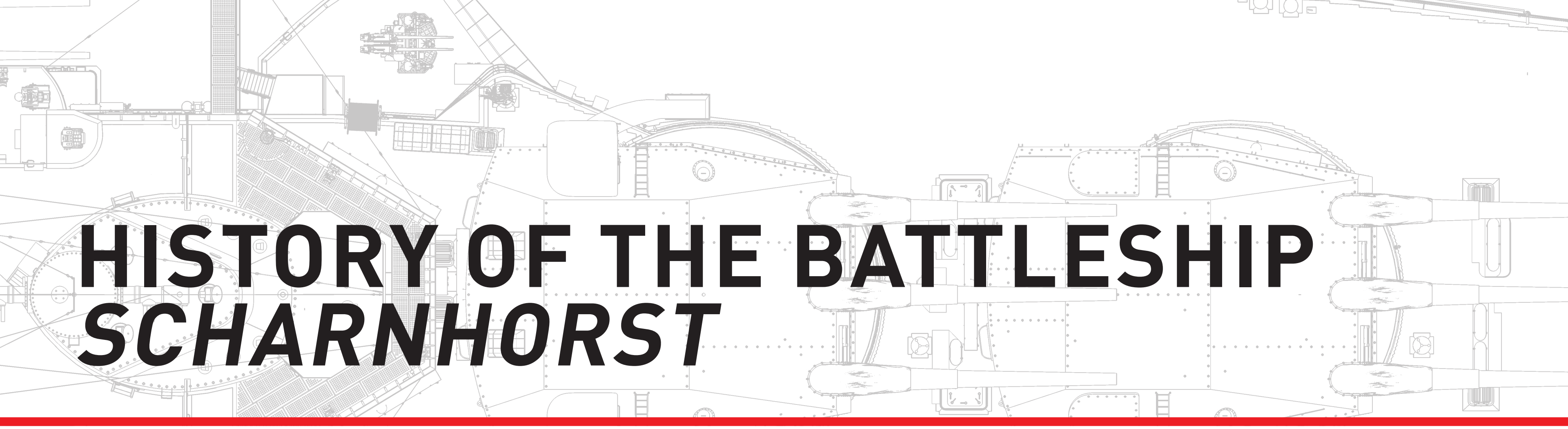

HISTORY OF THE BATTLESHIP *SCHARNHORST*

25 January 1934: Marinewerft Wilhelmshaven (from 1935 named Kriegsmarinewerft) was awarded the contract to build battleship *D*, or *Ersatz Elsass*.

14 February 1934: The keel was laid down on Slip 2.

5 July 1934: Construction work was stopped and material on the slipway scrapped. A new revised design was ordered to be prepared.

15 June 1935: The keel of a new vessel was laid down (build number 125).

3 October 1936: The hull was launched. It was announced during the ceremony that the name of the battleship would be *Scharnhorst*. A speech was delivered by the War Minister, General Field Marshal Werner von Blomberg. The hull was christened by the widow of Captain Felix Schultz, who was killed aboard the armoured cruiser *Scharnhorst*, sunk during the Battle of the Falkland Islands (1914).

7 January 1939: Commissioning day of the battleship.
The crew was addressed by the battleship's commander (Captain Otto Ciliax) on the quarterdeck, followed by hoisting of the battle flag from the ensign staff.

January–March 1939: *Scharnhorst* conducted trials in the Baltic, visiting several harbours: Pillau, Memel, Sassnitz and Kiel.

1 April 1939: The ceremony of launching the hull of the battleship *Tirpitz* at Wilhelmshaven. *Scharnhorst* hosted high-ranked officers and state officials on board, including the chancellor Adolf Hitler. On this occasion Erich Raeder received his promotion to Grand Admiral.

June–August 1939: Extensive refit of the battleship at Wilhelmshaven. The work included, amongst others, rebuilding the bow, enlargement of the aircraft hangar, removal of the funnel mainmast and construction of a new tripod mainmast aft.

4 September 1939: Shortly after war had been declared between Britain and Germany, RAF bombers conducted an attack on *Scharnhorst* and *Gneisenau* anchored at Brunsbüttel (near the eastern entrance to the Kiel Canal). No hits were scored.

September 1939: Both ships conducted a series of artillery firings in the Baltic. Target ship *Hessen* participated in the training.

1 October 1939: Captain Kurt Caesar Hoffmann relieved Captain Otto Ciliax as the commander of *Scharnhorst*.

Norwegian Sea, June 1940. *Scharnhorst* steaming through heavy seas with her sister ship *Gneisenau* (visible in distance) during Operation *Juno*. The port side fore 15cm turret is in the foreground, the bolts in its armour plates standing out. The fore superstructure's bridge wing is in its stowed position (upper right corner). Main artillery turrets A and B are in the background. Turret A has its rangefinder still fitted. It was removed in late 1941, as a result of experiences gained during Operation *Berlin*. (Bundesarchiv, 101II-MW-0905-15, photo: Sander)

Norwegian Sea, June 1940. A photograph probably taken immediately after the previous one. The port side aft twin 15cm turret is in the foreground, with a single 15cm mount and a twin 10.5cm mount visible behind. All are trained to the side, indicating a state of combat readiness, though their muzzles have their protective covers in place. As evident in this photograph, *Scharnhorst* class vessels were wet ships, with water pouring onto the upper deck most of the time. (Bundesarchiv, 101II-MW-0905-28, photo: Sander)

7–9 October 1939: *Scharnhorst*, *Gneisenau*, light cruiser *Köln* and nine destroyers departed Kiel on a merchant-raiding sortie in the North Sea. The purpose was to drag British forces into a trap set by U-boats and to distract the Allied search for pocket battleships *Deutschland* and *Admiral Graf Spee* in the Atlantic.

8 November 1939: Sailed from Kiel to Wilhelmshaven in preparation for another operation.

21 November 1939: Vice Admiral Wilhelm Marschall led his task force (*Scharnhorst*, *Gneisenau*, light cruisers *Köln* and *Leipzig* with three destroyers and four torpedo boats) on a sortie with the intention to attack vessels of the Northern Patrol (the British patrol line between Iceland and the Faroes).

22 November 1939: The light forces detached and returned to bases, with the two battleships now proceeding north-west.

23 November 1939: German task force reached the operating area of the Northern Patrol and started searching for the enemy. Weather was stormy for the rest of the day.

23 November 1939, 1607hrs: lookouts on *Scharnhorst* spotted an unknown vessel. This turned out to be HMS *Rawalpindi*, a British armed merchant cruiser with Captain Edward Coverley Kennedy in command (16,700grt, 8 x 15cm guns). Efforts by the British crew to escape and hide in the fog were unsuccessful.

23 November 1939, 1703hrs: After the German demand to stop the engines was ignored, *Scharnhorst* opened fire. *Gneisenau* joined in shortly afterwards. Captain Kennedy managed to send a message alerting the Admiralty to the presence of the two German raiders. Although hopelessly outmatched, he also decided to return fire.

23 November 1939, 1712hrs: Having sent an avalanche of shells towards *Rawalpindi* and turning her into a floating wreck, the German battleships checked fire. *Scharnhorst* fired 89 28cm shells and 109

15cm shells during the engagement. She also received one 15cm shell hit but damage was only slight.

23 November 1939, 1730hrs: An explosion was seen on *Rawalpindi*. With the armed merchant cruiser apparently sinking, *Scharnhorst* and *Gneisenau* began picking up survivors. Only 38 men of her 276-strong crew were saved. The light cruiser HMS *Newcastle* was spotted and the German battleships quickly retired to the north.

Norwegian Sea, June 1940. Large portions of both superstructures, masts and funnel are visible in this starboard side view taken during Operation *Juno*. An interesting feature to the left is a close-up of turret Cäsar's rangefinder optics. The shield in their protective hood is open in anticipation of action with the enemy. (Bundesarchiv, 101II-MW-0904-21, photo: Sander)

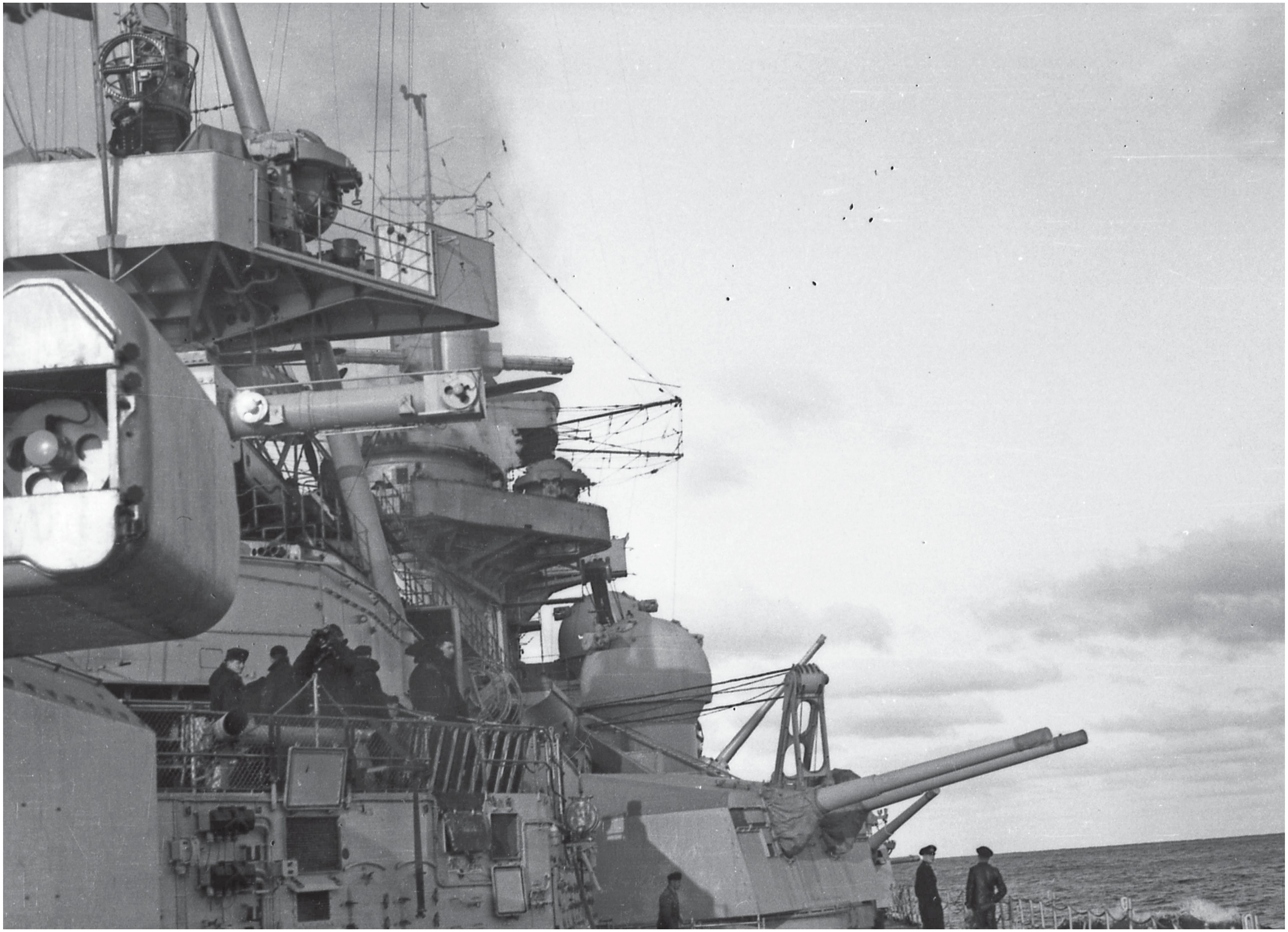

26 November 1939: Having waited until the weather deteriorated again, Vice Admiral Marschall led his force back to Germany, avoiding the Royal Navy's pursuit.

28 November 1939: Returned to Wilhelmshaven.

December 1939: Technical maintenance in Wilhelmshaven. Due to the very harsh winter, it was impossible to sail until almost mid-January.

11 January 1940: *Scharnhorst* passed through the Kiel Canal and arrived at Kiel.

5 February 1940: Sailed back to Wilhelmshaven.

18 February 1940: Operation *Nordmark*. Accompanied by *Gneisenau*, heavy cruiser *Admiral Hipper* and three destroyers, *Scharnhorst* left Wilhelmshaven and sailed north-west. The aim was to attack and destroy merchant shipping between Britain and Norway. However, no enemy vessels were found.

20 February 1940: Arrived at Wilhelmshaven.

6 March 1940: One of *Scharnhorst's* floatplanes crashed during a training flight. Both crew members were killed.

7 April 1940: Operation *Weserübung*. Virtually all surface vessels of the Kriegsmarine were assigned to the task of supporting the occupation of Norway and Denmark. *Scharnhorst* and *Gneisenau*, the most powerful German ships at the time, were ordered to act as distant escorts. They left Wilhelmshaven at 0200hrs under the command of Admiral Günther Lütjens. *Admiral Hipper* and 13 destroyers (nine of them loaded with troops bound for Narvik) joined in the North Sea. The German task force was detected by British reconnaissance soon after dawn. Some Home Fleet ships were ordered to sea, but at this moment German intentions were unknown.

North Atlantic, between January and March 1941. Photograph taken from aboard *Gneisenau*, showing *Scharnhorst* from her port side during the course of Operation *Berlin*. Several remaining stripes of the 'Baltic' camouflage worn back in December 1940 are evident in the midships portion of the hull. Interestingly, the area where the radar antenna is fitted has been obscured with a black spot. This was most probably done by a censor in an effort to hide the newest technical achievements of German engineers.
(Bundesarchiv, 134-C1107A, photo: o.Ang.)

8 April 1940: *Admiral Hipper* was detached to sink the British destroyer HMS *Glowworm* when she encountered the German force. *Scharnhorst* and *Gneisenau* steamed together with the destroyers until the evening. Weather deteriorated and the ships were having trouble sailing through the heavy storm.

9 April 1940, 0430hrs: *Gneisenau's* radar picked up a contact at about 25,000m. This was the battlecruiser HMS *Renown* (36,000 tons, 6 x 15in guns, 20 x 4.5in guns) escorted by destroyers.

9 April 1940, 0507hrs: HMS *Renown* opened fire, *Gneisenau* being her target.

9 April 1940, 0510hrs: *Scharnhorst* returned fire, joined a minute later by her sister ship. Heavy seas and poor visibility seriously affected fire control.

9 April 1940, 0521hrs: Having hit *Gneisenau* three times (a 15in shell damaged main fire control post and two 4.5in hits slightly damaged her turrets), *Renown* shifted fire to *Scharnhorst*.

9 April 1940, 0641hrs: *Scharnhorst* ceased fire and the German force succeeded in breaking off the engagement. Total ammunition expenditure of the battleship: 195 28cm shells, 91 15cm shells. She received no hits, but experienced serious problems with her turbines. Stormy weather caused some minor damage. *Renown*, on the other hand, was hit by two 28cm shells which did little harm.

12 April 1940: *Scharnhorst* and *Gneisenau* rendezvoused with *Admiral Hipper*. British aircraft sent to bomb the German ships failed to find their target. The task force reached Wilhelmshaven in the evening.

5 May 1940: *Gneisenau* hit a mine in the area of Brunsbüttel. She had to undergo repairs for some two weeks before she could take part in another operation with her sister ship.

10 May 1940: *Scharnhorst* arrived at Kiel and received an overhaul to her machinery.

4 June 1940: Operation *Juno*. Kriegsmarine units were ordered to support the troops fighting in Narvik by attacking merchant shipping off Norway. *Scharnhorst*, *Gneisenau*, *Admiral Hipper* and four destroyers left Kiel under the command of Admiral Wilhelm Marschall. In the meantime, unknown to the Germans, the British started evacuating their land forces from Norway.

8 June 1940: German task force succeeded in locating some enemy ships. The empty troopship *Orama*, minesweeping trawler HMT *Juniper* and tanker *Oil Pioneer* were sunk. Marschall then detached *Admiral Hipper* and the destroyers since they needed to refuel in Trondheim. The two battleships proceeded north.

8 June 1940, 1646hrs: smoke spotted by *Scharnhorst* lookouts. The task force increased speed and turned to intercept a possible enemy.

8 June 1940, 1713hrs: An aircraft carrier, initially identified as HMS *Ark Royal*, was confirmed accompanied by two destroyers. This was the carrier HMS *Glorious* with HMS *Ardent* and HMS *Acasta*. They were taken by surprise, having no warning radar, steaming at slow speed, and with no aircraft in the air or ready to take off.

8 June 1940, 1732hrs: *Scharnhorst* opened fire at *Glorious* from the distance of 26,000m. Straddles were quickly achieved. Secondary artillery soon joined, firing at the destroyers. *Ardent* attempted to make a torpedo run towards the battleships.

8 June 1940, 1822hrs: *Ardent*, having been repeatedly hit, capsized and sank. By this time *Glorious* was heavily damaged, burning furiously and developing a heavy list.

8 June 1940, 1839hrs: *Acasta* performed a heroic torpedo attack, managing to hit *Scharnhorst* on her starboard quarter, below turret C. The hole in the hull measured 12m x 4m and around 2,500 tonnes of water rushed into the hull. The ammunition magazines of turret C were completely flooded, as well as the starboard shaft tunnel. There was also some flooding in the centre turbine room but

the pumps managed to get the situation under control. Casualties included 48 dead and 3 wounded.

8 June 1940, 1910hrs: *Glorious* sank. German battleships continued to fire at *Acasta*.

8 June 1940, 1925hrs: With *Acasta* disappearing below the surface, the battle came to a close. *Scharnhorst* fired 210 28cm shells, 850 15cm shells and 136 10.5cm shells. Having sustained damage and not certain whether a strong British task force might be around, the battleships quickly retired to Trondheim. No attempt was made to pick up survivors, although huge numbers of them were in the water. A total of 1,519 British sailors perished, with only 40 being picked up by two Norwegian ships and a German floatplane over the next few days.

9 June 1940: Anchored off Trondheim. Divers inspected the damage to the hull, followed by provisional repairs being made by repair ship

North Atlantic, 6 March 1941. On this day *Scharnhorst* encountered U-124 (U-boat Type IXB). A fragment of the U-boat's conning tower and a few of her crewmembers are visible in the bottom of the photograph. Note the dark stains on the hull of the battleship. Its paintwork is seriously worn after 1.5 months spent in the open ocean. The operation would last until 22 March, when *Scharnhorst* and *Gneisenau* safely reached Brest in German-occupied France. (Bundesarchiv, 101II-MW-4221-04, photo: Dietrich)

Brest, France, March–April 1941. *Scharnhorst*'s sister ship, *Gneisenau*, can be seen sitting in a drydock following Operation *Berlin*. Although *Gneisenau* was built in accordance with the same basic design as the *Scharnhorst*, the two battleships were hardly identical. Differences may be spotted by a careful observer in almost any area of the ship. Some features evident in this photograph include: masts on the funnel platform and aft rangefinder (*Scharnhorst* had hers replaced with a single tall mainmast as early as 1939), skylights near the main artillery barbettes, a catwalk along the barbette of turret B, supports outside the front bulwarks on the bridge deck, the design of the fore SL-6 director's base, design of the main crane, position of the fog horn and shape of the foretop platform. Last but not least, the admiral's bridge is fully enclosed, whereas *Scharnhorst* did not receive this modification until mid-1942.
(Bundesarchiv, 101I-017-1070-34, photo: Harschneck)

Huascaran and salvage ship *Parat*. With her hull patched, *Scharnhorst* was ready for a voyage back to Germany.

13 June 1940: British air raid on ships in the Trondheim area. Initially, it was thought that *Scharnhorst* received no hits, but later a dud bomb was found inside the hull. Damage was minor.

20 June 1940: Accompanied by three destroyers, two (later four) torpedo boats and three minesweepers, *Scharnhorst* slowly sailed south.

In the meantime, *Gneisenau* with *Admiral Hipper* and a destroyer sortied towards the Faroes as a diversion. In the course of this mission, the battleship was hit by a torpedo from submarine HMS *Clyde*.

24 June 1940: *Scharnhorst* entered drydock C in Kiel and a thorough overhaul was started immediately.

21 November 1940: With repair work mostly completed, the battleship moved to Gdynia (then Gotenhafen in occupied Poland).

early December 1940: Conducted practice firings in the Baltic with sister ship *Gneisenau* and target ship *Hessen*.

19 December 1940: Entered drydock B in Kiel for the last portion of overhaul.

23 December 1940: Completion of all repair work. Both *Scharnhorst* and *Gneisenau* were now declared ready to conduct a raiding mission.

28 December 1940: The two battleships sortied with the intention of breaking out into the Atlantic.

30 December 1940: Upon reaching the North Sea, German task force encountered a severe storm. *Gneisenau* sustained some structural damage and flooding to her bow and required repair. Admiral Lütjens took the two ships under his command to Korsfjord and intended to conduct the necessary work at Trondheim. However, he was ordered to turn back.

14 January 1941: After a short stay at Gdynia, *Scharnhorst* moved to Kiel where she received a refit of her light AA artillery.

22 January 1941: Operation *Berlin*. Under the command of Admiral Lütjens aboard *Gneisenau*, both German battleships left Kiel to make a second attempt to break out into the Atlantic. The objective of the mission was to attack merchant shipping, primarily Allied convoys. Intelligence soon informed the Admiralty of the German presence along the Danish coast. Home Fleet was alerted and put to sea.

28 January 1941: While attempting to sail through the Iceland–Faroes gap, the German task force was encountered by the patrolling light cruiser HMS *Naiad*. Lütjens was able to break contact and retired north. The British concluded that this must have been a phantom sighting.

30 January 1941: *Scharnhorst* and *Gneisenau* refuelled from the tanker *Adria* (a total of 3,400 tonnes of oil).

4 February 1941: The German force successfully passed through the Denmark Strait (passage between Iceland and Greenland). It was now able to begin its mission of searching for convoys.

5 February 1941: Refuelling from the tanker *Schlettstadt* (around 1,500 tonnes of fuel). The two battleships temporarily separated in order to widen the scope of their search.

8 February 1941: A convoy (HX-106) was sighted by *Gneisenau*. As the task force prepared for an attack, it was discovered that the convoy was escorted by a battleship. This was HMS *Ramillies*, a slow but strongly armed (8 x 15in guns) and well protected vessel. Instructions for the operation clearly stated that the risk of engaging such an enemy was not to be taken, and Lütjens ordered his ships to retire. Meanwhile, British lookouts reported sighting an Admiral Hipper class cruiser, mistakenly reassuring the Admiralty that *Scharnhorst* and *Gneisenau* were in Germany.

14–15 February 1941: German battleships refuelled from the tankers *Esso Hamburg* and *Schlettstadt*.

22 February 1941: A small convoy was discovered east of Newfoundland. As it turned out, these were empty ships bound for the United States. The two German raiders were identified and the Admiralty was alerted. *Scharnhorst* and *Gneisenau* increased speed and attacked the scattering ships. Five merchantmen were sunk (total 25,784grt).

26–28 February 1941: Met and subsequently refuelled from tankers *Ermland* and *Friedrich Breme*. Meanwhile, Admiral Lütjens decided to move his force to the African coast.

5 March 1941: One of *Scharnhorst's* Arado floatplanes went missing. It was later found afloat, having run out of fuel.

6 March 1941: Meeting with U-124 (Type IXB U-boat). The submarine commander briefed Admiral Lütjens on the situation in his operational area.

7 March 1941: *Scharnhorst's* lookouts spotted an enemy battleship. This turned out to be HMS *Malaya* (8 x 15in guns) escorting the convoy SL-67. As the German surface force was not allowed to engage, U-boats were informed of the sighting so that they could deliver an attack.

8 March 1941: U-124 and U-105 (Type IXB) managed to sink seven ships from the convoy.

9 March 1941: *Scharnhorst* sank the Greek freighter *Marathon* which was steaming unescorted towards Alexandria.

11–12 March 1941: Refuelled and took provisions from supply ships *Ermland* and *Uckermark*. The two vessels then joined *Scharnhorst* and *Gneisenau* and helped in their search for Allied convoys. Spread across many miles, the four ships scanned a vast area of the ocean. It was decided to move to the area east of Newfoundland.

15 March 1941: *Gneisenau* managed to locate six tankers from a scattered convoy. Three were sunk and three taken over by prize crews.

16 March 1941: *Ermland* and *Uckermark* signalled sighting a convoy. *Scharnhorst* and *Gneisenau* moved to intercept. As many as ten merchantmen were found and sunk. In the afternoon, *Gneisenau* was spotted by the battleship HMS *Rodney* (9 x 16in guns). The German force immediately retired, putting its superior speed to use.

18 March 1941: Refuelled yet again from *Ermland* and *Uckermark*.

19 March 1941: In compliance with orders from Group West, *Scharnhorst* and *Gneisenau* set course for German-occupied France.

20 March 1941: The battleships were spotted by aircraft from the carrier HMS *Ark Royal*. However, the British were unable to launch an attack.

22 March 1941: Conclusion of Operation *Berlin*. Escorted by torpedo boats *Jaguar* and *Iltis* during the last stage of their mission, *Scharnhorst* and *Gneisenau* moored in the harbour of Brest, France. Having spent 61 days at sea, the battleships sailed a total 17,800 miles and sank or captured 22 ships (113,690grt). *Scharnhorst* was accountable for eight of these sinkings (47,588grt). The battleship's propulsion caused repeated problems during the operation and was in urgent need of general overhaul.

30–31 March 1941: British night air raid on Brest. Neither *Scharnhorst* nor *Gneisenau* were hit.

6 April 1941: During another air raid *Gneisenau* was hit with a torpedo in the area of turret C, starboard side.

10–11 April 1941: *Gneisenau* sustained more damage – four bomb hits during a night air raid. Repairs would last until the end of the year.

1 June 1941: Heavy cruiser *Prinz Eugen* arrived at Brest after the failure of Operation *Rheinübung*. With this concentration of German heavy ships in Brest, it was considered to move at least some of them to another base.

21 July 1941: After the completion of repairs to *Scharnhorst's* boilers, the battleship, assisted by five destroyers, moved south to La Pallice. This base was considered much safer in terms of risk from an air raid.

24 July 1941: During an air raid on La Pallice, *Scharnhorst* was hit by five bombs, all on starboard side. Two of the bombs penetrated the upper deck and exploded on the main armoured deck, whereas other three bombs penetrated all decks and exited through the double bottom without exploding. Two sailors were killed and 15 wounded. There was some serious flooding of the hull (around 3,000 tonnes), and the ship developed a severe list (8º). This raid was a bitter proof that La Pallice was no safer than the *Scharnhorst's* previous berth.

Brest, France, March–April 1941.A photograph taken from the searchlight platform looking towards the stern. *Scharnhorst's* crew is gathered on the quarterdeck for some kind of ceremony. As evident here, the aft 10.5cm mount had a different, more enclosed shield than the six mounts fitted around the funnel.
(Bundesarchiv, 101I-017-1070-06, photo: Harschneck)

27 July 1941: The battleship had to be drydocked for repairs and set course for Brest, which it reached safely. The overhaul would last almost until the end of the year. The heavy ships in Brest were constantly attacked by the RAF during this time, albeit with little success.

17–18 December 1941: During a night air raid, the gates of the drydock in which *Scharnhorst* was lying were damaged. The battleship was temporarily trapped until necessary repairs could be made.

15 January 1942: After the completion of all work, *Scharnhorst* left the drydock. In the meantime, decisions were made regarding the

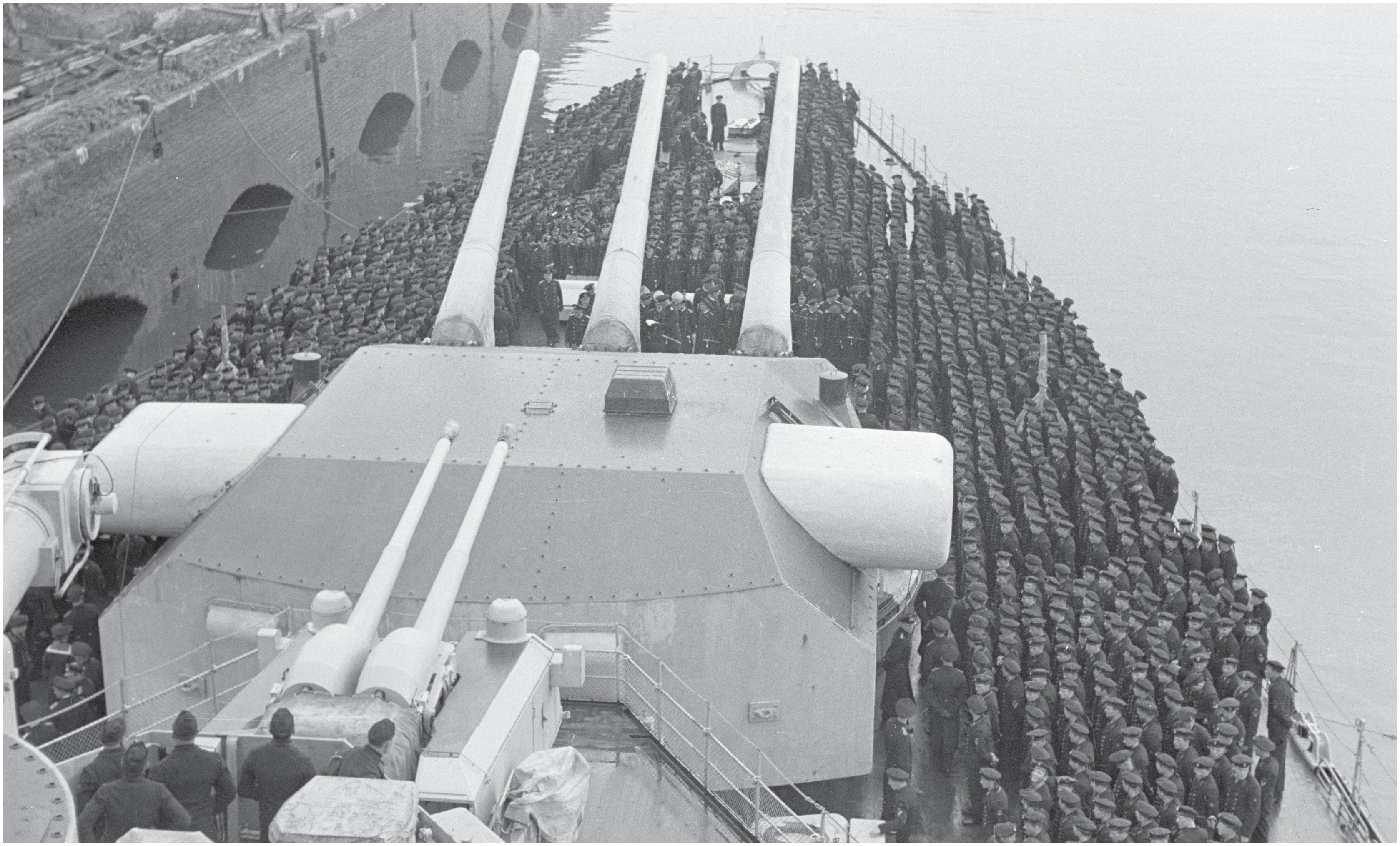

future use of Kriegsmarine ships. With the loss of almost all supply ships in the Atlantic and the US entry to war, commerce raiding in the open ocean seemed to have very little chance of success. In addition, the experiences from Operation *Rheinübung* that resulted in the sinking of the battleship *Bismarck* clearly showed that remaining undetected would be a lot more difficult. The British now had very effective naval radar and their air search capabilities had improved. It was therefore decided to move all heavy units to Norway, from where they could threaten the Artic convoys carrying vital supplies for the USSR. But first, the three ships moored in Brest had to reach German waters.

3 February 1942: *Scharnhorst* conducted sea trials off the French coast together with a destroyer and several torpedo boats.

11 February 1942, 2225hrs: Beginning of Operation *Cerberus*. Immediately after an unsuccessful British air raid, *Scharnhorst* (with task force commander Vice Admiral Ciliax on board), *Gneisenau* and *Prinz Eugen* left Brest and headed for the narrow Strait of Dover in a bold attempt to pass through in daylight. Six destroyers and 19 S-Boats

Brest, France, March–April 1941. View of the aft superstructure during the same ceremony. Note the two twin 3.7cm gun mounts in the foreground, both of them under canvas covers. Ammunition lockers are placed in the vicinity. The port side accommodation ladder can be seen rigged (bottom right corner). (Bundesarchiv, 101I-017-1070-06, photo: Harschneck)

were acting as an escort. Thirteen torpedo boats joined in the morning. The British failed to detect the sortie.

12 February 1942, 1110hrs: The German force was at sea for many hours before being spotted by two reconnaissance Spitfires. The message to headquarters was not sent until 1140hrs, when the aircraft landed.

12 February 1942, 1318hrs: The Germans have already passed the narrowest point of the strait when heavy artillery from the Dover area opened fire at them. None of the 33 salvos hit. Shortly afterwards eight MTBs attempted a torpedo attack, but with no success. Six Fairey Swordfish biplane torpedo bombers also arrived, but they were all shot down.

12 February 1942, 1530hrs: While steaming in the area off Vlissingen, Netherlands, a mine exploded under *Scharnhorst's* hull (section XVI). Several boilers were extinguished, and the ship momentarily lost speed and all power. Vice Admiral Ciliax moved his flag to the destroyer *Z29*. Luckily for the Germans, propulsion was restored very quickly (in a matter of 15 minutes).

Brest, France, March–April 1941. Area around turret C, starboard side. Note the short barriers fitted along the guard rails. They prevented empty 28cm cases from falling overboard. The turret's roof and slopes (minus rangefinder hoods) are painted in a different colour from the rest of the ship. The colour used at the time was most probably yellow.
(Bundesarchiv, 101I-017-1070-23, photo: Harschneck)

12 February 1942, 1645hrs: A coordinated attack by the British ships and aircraft was made. Six old destroyers failed to inflict any damage, and in turn HMS *Worcester* was repeatedly hit by large calibre shells. She later managed to get back to base. The aircraft (Lockheed Hudsons and Bristol Beauforts) were no more lucky – many of them were shot down without achieving any result.

12 February 1942, 2055hrs: *Gneisenau* was damaged by a mine explosion in her aft section, but was stopped only temporarily.

12 February 1942, 2235hrs: Yet another mine detonated, this time damaging one of *Scharnhorst's* propeller shafts. She took on around 1,000 tonnes of water and did not get underway for 45 minutes. She later restored power and proceeded east at a reduced speed of around 15 knots.

13 February 1942, around noon: The limping *Scharnhorst* reached Wilhelmshaven long after *Gneisenau* and the undamaged *Prinz Eugen* had arrived at Brunsbüttel. Operation *Cerberus* came to a close. The British attempts to slow the German ships down during what they called 'the Channel Dash' were a complete failure. This was even more embarrassing due to the fact that the attacks took place so close to British bases. Despite this, the damage that both German battleships sustained from magnetic mines spoiled the outcome of the operation that otherwise would have been a brilliant success.

15 February 1942: *Scharnhorst* entered a drydock in Deutsche Werke Kiel for a lengthy overhaul.

26–27 February 1942: A night air raid resulted in a critical bomb hit on *Gneisenau*. An explosion on her main armoured deck vented down to the magazines and ignited propellants under turret A. The result was a complete destruction of this turret and devastation of the bow part of the hull. *Gneisenau* would never return to service with her sister ship.

12 March 1942: During one of the frequent air raids on Kiel, *Scharnhorst* sustained some minor damage.

1 April 1942: Captain Friedrich Hüffmeier relieved Captain Hoffmann as commanding officer of the battleship.

16 July 1942: Machinery trials were conducted aboard *Scharnhorst*. The results were unsatisfactory. However, she was able to sail under her own power and the decision to move to a safer base was made.

18 August 1942: The battleship arrived at Gdynia for more repairs and crew training.

October 1942: Captain Fritz Hintze assumed command of *Scharnhorst*.

November 1942: More repair work was done in drydock.

22 December 1942: *Scharnhorst* experienced a serious failure in her propulsion system, leaving one of her propeller shafts not working. Despite this, the vessel was declared ready to relocate to Norway where the necessary work would be completed.

9 January 1943: Operation *Frontttheater*. *Scharnhorst* (with commanding Admiral Otto Schniewind on board), *Prinz Eugen* and three destroyers left Gdynia and set course for Norway.

11 January 1943: The German force was sighted by British reconnaissance and an air raid warning was issued. It was decided to turn back and the mission was abandoned.

23 January 1943: Operation *Domino*. In a second attempt to relocate to Norway, *Scharnhorst*, *Prinz Eugen* and two destroyers sortied from Gdynia.

27 January 1943: In similar fashion to *Frontttheater*, their passage was detected and the German ships were forced to return to base. During a refuelling accident, a volume of fuel oil spilled onto *Scharnhorst's* upper deck.

6 March 1943: Operation *Paderborn*. Following trials in the Baltic, *Scharnhorst* headed west escorted by destroyers and torpedo boats.

9 March 1943: On her third attempt, the battleship managed to reach Bogen Bay near Narvik, Norway. The Germans took advantage of the bad weather that greatly hampered British reconnaissance.

13 March 1943: Battleship *Tirpitz* arrived at Bogen Bay. A Kampfgruppe (Combat Task Force) was formed under the command of Admiral Oskar Kummetz. Its core consisted of battleships *Tirpitz, Scharnhorst* and heavy cruiser *Lützow*.

18–21 March 1943: The three heavy ships took part in joint training off the Norwegian coast.

22 March 1943: Operation *Silesia*. The Kampfgruppe, escorted by three destroyers and two torpedo boats, set course north to Altafjord.

Brest, France, March–April 1941. A communication boat can be seen moored alongside the battleship. Note the degaussing cable running along the hull. This gave a measure of passive protection against magnetic mines. Two empty depth charge racks are visible on the stern.
(Bundesarchiv, 101I-017-1070-24, photo: Harschneck)

Brest, France, March–April 1941. Yet another view of the ceremony aboard *Scharnhorst* moored to the pier. The battleship would stay in France for almost a year, until February 1942.
(Bundesarchiv, 101I-017-1070-24, photo: Harschneck)

24 March 1943: After an uneventful voyage, *Scharnhorst* dropped anchor in Langfjord, an inlet of Altafjord. Subsequently, she moved to the nearby Kåfjord. All German ships received the protection of anti-torpedo nets.

8 April 1943: An explosion occurred on board *Scharnhorst*. Some flammable material stored on the armoured deck, section III, caught light. In the crew's quarters one deck above 17 men were killed and 20 injured. The damage to the ship, however, was not serious. The cause of the incident was never established, but sabotage by Polish workers in Gdynia was suspected.

30 April 1943: Joint exercise by the heavy ships. Such events would become very rare in the months to come. Fuel shortages had become a significant concern at this point and oil had to be conserved for combat operations. This had a considerable negative impact on the crew's morale as, stationed in an isolated spot, it had very little to do for long periods of time.

6–9 September 1943: Operation *Sizilien*. The task force consisting of *Tirpitz*, *Scharnhorst* and nine destroyers sailed to destroy the Allied meteorological base on the island of Spitsbergen. After shore bombardment concluded, some troops were landed to complete the demolition of infrastructure. One destroyer (*Z29*) received some minor damage. Apart from that, the operation was a success. Although of very little strategic value, it proved to be a boost to the crews' morale.

22 September 1943: Operation *Source*. British midget submarines managed to enter *Tirpitz's* mooring place undetected and inflicted very serious damage to the battleship. She was under repair for many months. *Scharnhorst*, absent from the fjord at the time, escaped undamaged. With *Lützow* having been sent back to Germany for repairs earlier in the month, this left *Scharnhorst* the only available heavy vessel in Norway.

November 1943: The Allies resumed the Arctic convoys. In the meantime, Admiral Kummetz fell ill and had to return to Germany. Rear Admiral Erich Bey (commander of destroyers) assumed the command of German naval forces in the North.

19 December 1943: During a meeting with Grand Admiral Karl Dönitz (commander-in-chief of the Kriegsmarine), Hitler authorised attacking Arctic convoys with surface forces.

22 December 1943: A convoy was spotted by a German meteorological aircraft. This was the eastbound JW-55B, consisting of

19 merchant ships, ten destroyers, two corvettes and a minesweeper. Unknown to the Germans, a strong distant escort was also provided in the form of Force I (heavy cruiser HMS *Norfolk* with light cruisers HMS *Belfast* and HMS *Sheffield* under the command of Rear Admiral Robert Burnett) and Force II (battleship HMS *Duke of York*, light cruiser HMS *Jamaica* and four destroyers commanded by Admiral Bruce Fraser).

25 December 1943, 1700hrs: Beginning of Operation *Ostfront*. The Kampfgruppe (*Scharnhorst* and five destroyers) left Altafjord with the objective of finding and destroying the convoy. Weather was very poor, with strong winds and stormy seas, in addition to the total darkness of the polar night. Meanwhile, the British were aware of German intentions thanks to intercepted and deciphered German messages. With their overwhelming naval forces in the area, they decided to set a trap for *Scharnhorst*.

26 December 1943, 0730hrs: Having reached the convoy's predicted location, Rear Admiral Bey ordered his ships to spread out and conduct a search in the vast area of the Barents Sea, leaving his ships separated by some distance. In the middle of the Arctic storm, *Scharnhorst* lost the destroyers and was unable to restore contact.

26 December 1943, 0834hrs: Radar aboard *Norfolk* detected *Scharnhorst*. The Germans were unaware of the presence of the British cruisers.

26 December 1943, 0921hrs: *Norfolk*, followed shortly afterwards by *Belfast* and *Sheffield*, illuminated the completely surprised *Scharnhorst* and fired several salvos at her. The battleship received two 8in shell hits. One disabled the foretop rangefinder and radar, while the other one struck the hull in section IX but failed to explode. *Scharnhorst* broke off the engagement after around ten minutes and attempted to circle Force I in order to approach the convoy.

Brest, France, Mid-1941. Members of *Scharnhorst's* crew conducting practice firing. The platform is positioned on the starboard side, below the catapult. Anti-aircraft capabilities were of vital importance to the battleship during her stay in France, as she and *Gneisenau* became targets of concentrated air attacks conducted by the RAF. The mount pictured here is the triaxially stabilised *Vierling* L C/38 quadruple 2cm mount. This was a variant of the biaxially stabilised Army *Vierling* designed especially for service in the Kriegsmarine, and was the best automatic weapon the German Navy had in 1941. Note the operator of a 1m manual rangefinder standing to the left. (Bundesarchiv, 101II-MW-2399-34, photo: Herbert Sprang)

26 December 1943, 1221hrs: The British cruisers, positioned to protect the convoy, regained contact and opened radar-directed fire at *Scharnhorst*. The battleship returned fire and *Norfolk* was hit twice. Her turret X was disabled, as was the fore superstructure radar. *Sheffield* had her outboard propeller shaft damaged by splinters.

26 December 1943, 1241hrs: Rear Admiral Bey decided to return to Norway and *Scharnhorst* turned south. Bey ordered the destroyers to attack the convoy, but they failed to locate it. Meanwhile, Force I

cruisers continued to shadow the battleship with Force II moving to block her way towards the fjords.

26 December 1943, 1617hrs: The *Duke of York's* radar picked up a contact at a distance of over 40,000m. In the minutes that followed, the battleship closed to attack *Scharnhorst*.

26 December 1943, 1647hrs: The British cruisers illuminated the target, while *Duke of York* opened fire with her 14in guns. The range was about 11,000m. *Scharnhorst* immediately turned sharply and increased speed, assuming a north-easterly course.

26 December 1943, 1708hrs: The German battleship received a hit in turret A which disabled it. Due to a fire and the threat to fore ammunition magazines, it was decided to flood them. *Scharnhorst* was also hit in her hull (section XII) and in her superstructure amidships (in the area of her 10.5cm battery). British radar-directed fire was very accurate from the first minutes of the battle, straddling *Scharnhorst* with the first salvos. The German battleship's only hope was now to shake her pursuers using her superior speed.

26 December 1943, 1713hrs: British destroyers received orders to launch a torpedo attack but were unable to execute it due to the sea conditions. Meanwhile, *Scharnhorst* made a turn to open the firing arcs of turret C. *Duke of York* was straddled with 28cm shells which caused some damage to the base of her mainmast, as well as wire antenna and radar cables.

26 December 1943, 1742hrs: *Scharnhorst* managed to increase the range to 16,500m when *Duke of York* scored more hits. The German battleship's turret B was damaged and had to be evacuated. Another shell hit the starboard side forward 15cm turret.

26 December 1943, 1824hrs: The range between the adversaries increased and it appeared that the German battleship would manage to escape. However, a shell from one of the *Duke of York's* final long-range salvos proved fatal for *Scharnhorst*. It is not known whether it actually penetrated the main armoured deck or exploded against it, but it managed to damage boiler room no. 1 (section IX). Steam pipes were ruptured and speed immediately dropped to 10 knots, allowing the pursuers to catch up with *Scharnhorst* and ultimately dooming the battleship. Another hit destroyed the hangar and a floatplane, and killed many sailors serving in unshielded positions.

26 December 1943, 1825hrs: Rear Admiral Bey, realising how desperate the situation had become, sent a message to SKL (*Seekriegsleitung* – Maritime Warfare Command), stating that they would 'fight to the last shell'. Meanwhile, the efforts of *Scharnhorst's* engineers allowed the ship to achieve a speed of 20 knots.

26 December 1943, 1850hrs: Destroyers HMS *Scorpion* and HNoMS *Stord* (serving under Norwegian flag) made a torpedo attack, firing 16 torpedoes in total, and managing to hit *Scharnhorst* once on her port side.

26 December 1943, 1855hrs: Another attack delivered by destroyers HMS *Savage* and HMS *Saumarez* fired 12 torpedoes and resulted in three hits on her side (on the bow, below turret B and amidships). Speed again fell to 10 knots. At this point *Scharnhorst* only had her turret C in action, along with some of the 15cm guns. She managed to hit *Saumarez*, killing 11 of her crew and wounding 11 more.

26 December 1943, 1910–1928hrs: Having closed the range to 9,500m, *Duke of York* fired 25 broadsides at *Scharnhorst*, achieving at least ten hits. *Jamaica* joined with her 6in guns. *Belfast* and *Jamaica* also fired six and three torpedoes respectively, which all missed.

26 December 1943, 1931–1937hrs: Destroyers approached *Scharnhorst* in order to deliver torpedo attacks. First, HMS *Opportune* fired eight torpedoes without success. HMS *Musketeer* was luckier, scoring three hits from a four-torpedo salvo. HMS *Virago* hit *Scharnhorst* with a further two torpedoes, while five others missed. Finally, *Jamaica* fired three torpedoes with two hits.

26 December 1943, 1945hrs: A loud detonation was heard on the British ships. The source was most probably *Scharnhorst's* turret B magazines. When the smoke cleared, the ship was gone. During the engagement, known as the Battle of the North Cape, *Scharnhorst* received numerous hits from 14in, 8in, 6in, 5.25in and 4.7in guns, as well as 11 torpedoes. After sinking rapidly in the freezing waters of the Barents Sea in the middle of a polar night, her crewmembers had very little chance of survival. Although hundreds of men were seen in the water, only 36 were saved out of the crew of 1,968. Rear Admiral Bey and Captain Hintze both perished. The official reason for the British destroyers' early departure and abandonment of rescue action was the threat of a U-boat attack.

3 October 2000: During a joint expedition sponsored by the Royal Norwegian Navy, BBC and NRK, the Norwegian research vessel HU *Svedrup II* located the wreck of *Scharnhorst* using her multibeam sonar. Underwater recovery vessel HNoMS *Tyr* confirmed the identity of the wreck.

COMMANDING OFFICERS

January 1939–September 1939 Captain Otto Ciliax

October 1939–March 1942 Captain Kurt Caesar Hoffmann

April 1942–October 1942 Captain Friedrich Hüffmeier

October 1942–December 1943 Captain Fritz Hintze

English Channel, 12 February 1942. The battleship can be seen steaming at high speed in the middle of Operation *Cerberus*, nicknamed the 'Channel Dash' by the British. On this occasion *Scharnhorst* wore a unique disruptive camouflage scheme consisting of small irregular dark spots painted on the original light grey of her superstructures. Note the clearly visible *Vierling* AA mount on the roof of turret B. It was fitted shortly before the operation in an effort to strengthen the ship's anti-aircraft defence. The mount was removed soon afterwards, perhaps because it obscured the view from the open bridge.
(Bundesarchiv, 101II-MW-3694-14, photo: Schlemmer)

JANUARY 1939, COMMISSIONING, WILHELMSHAVEN

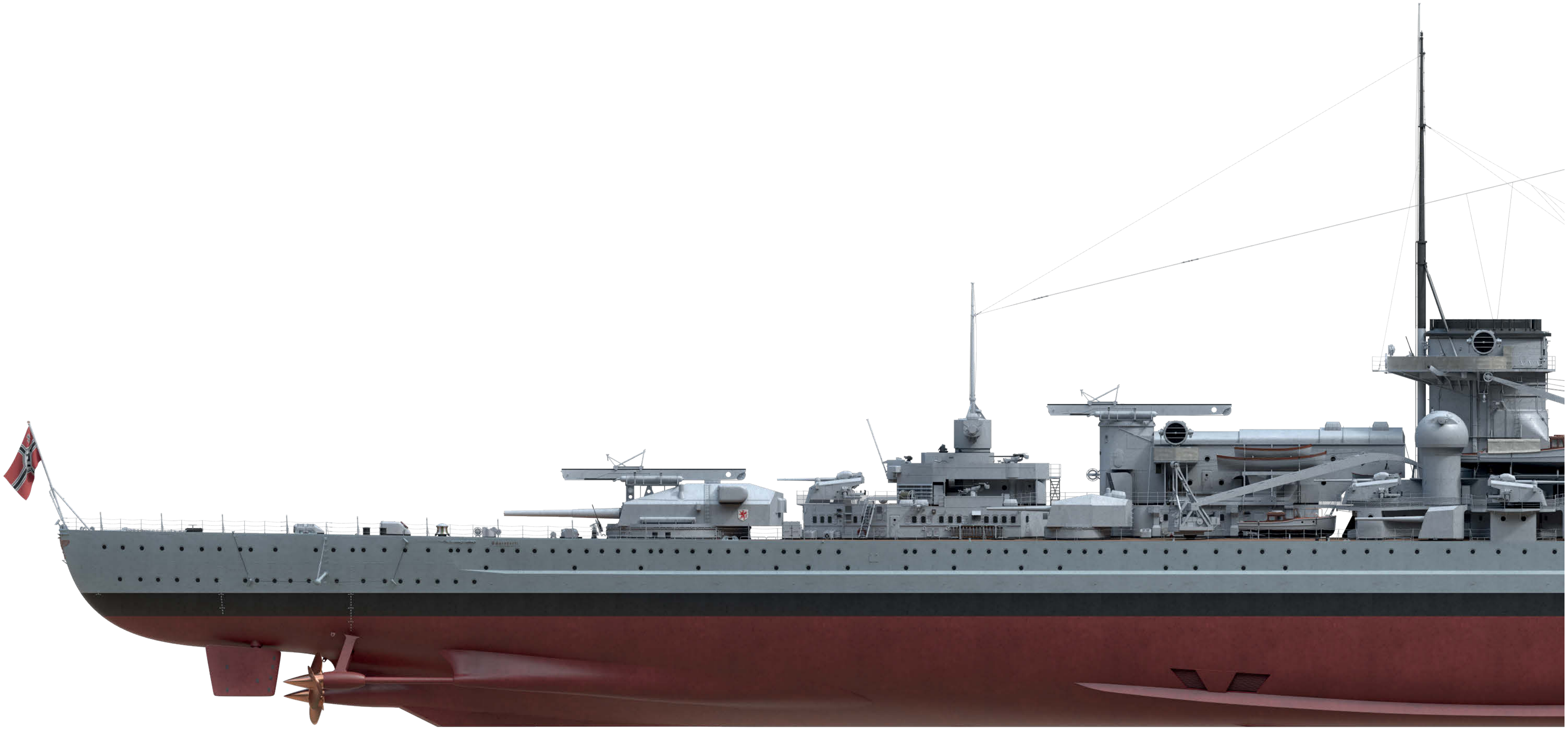

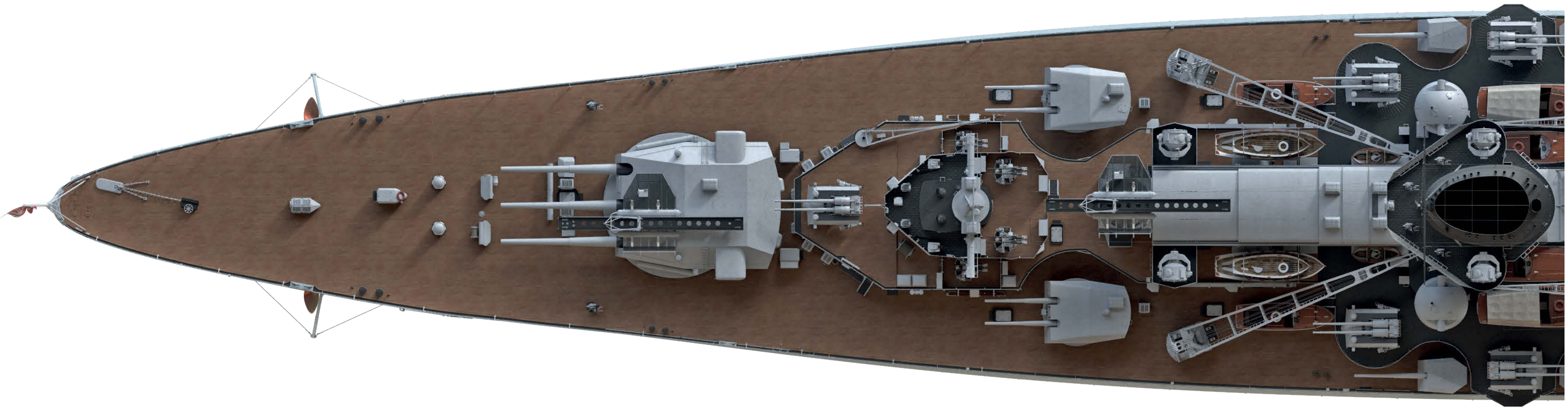

Schlachtschiff Scharnhorst

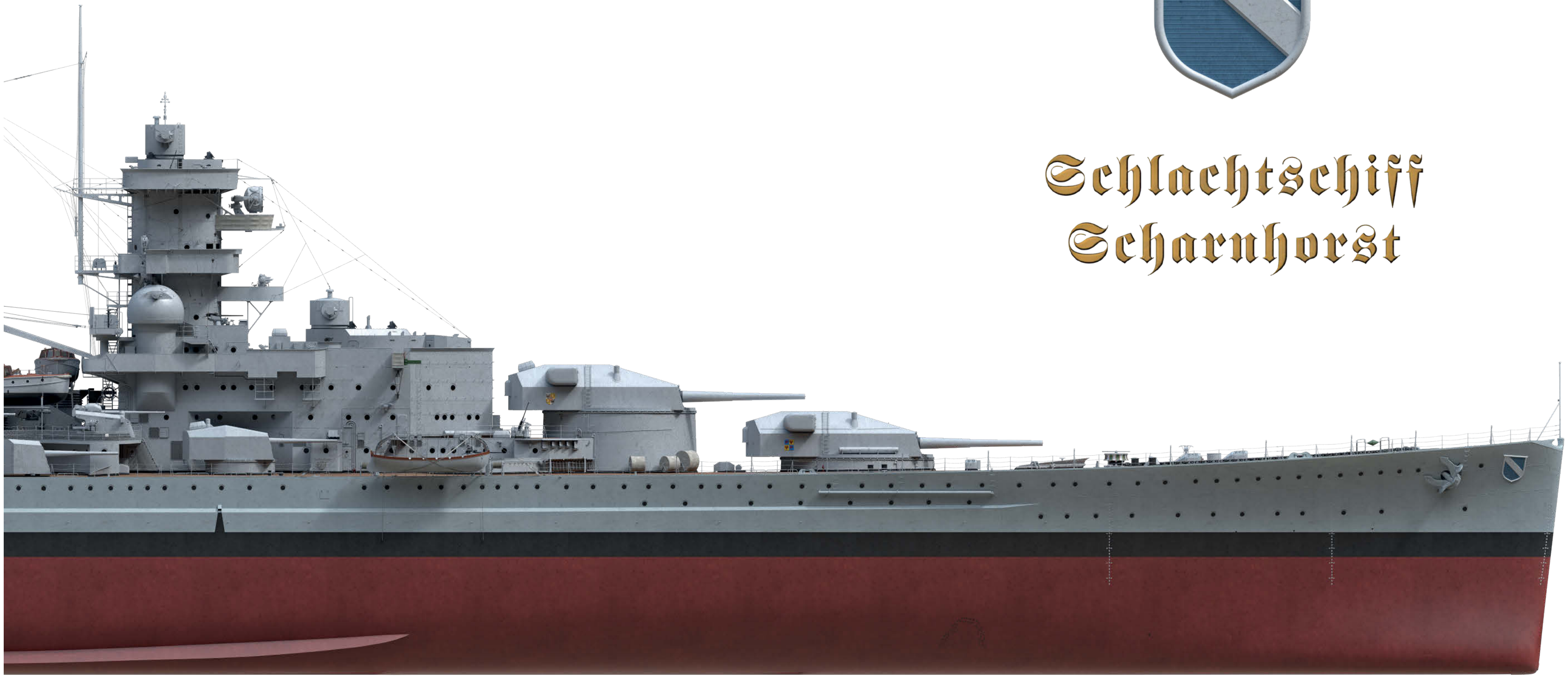

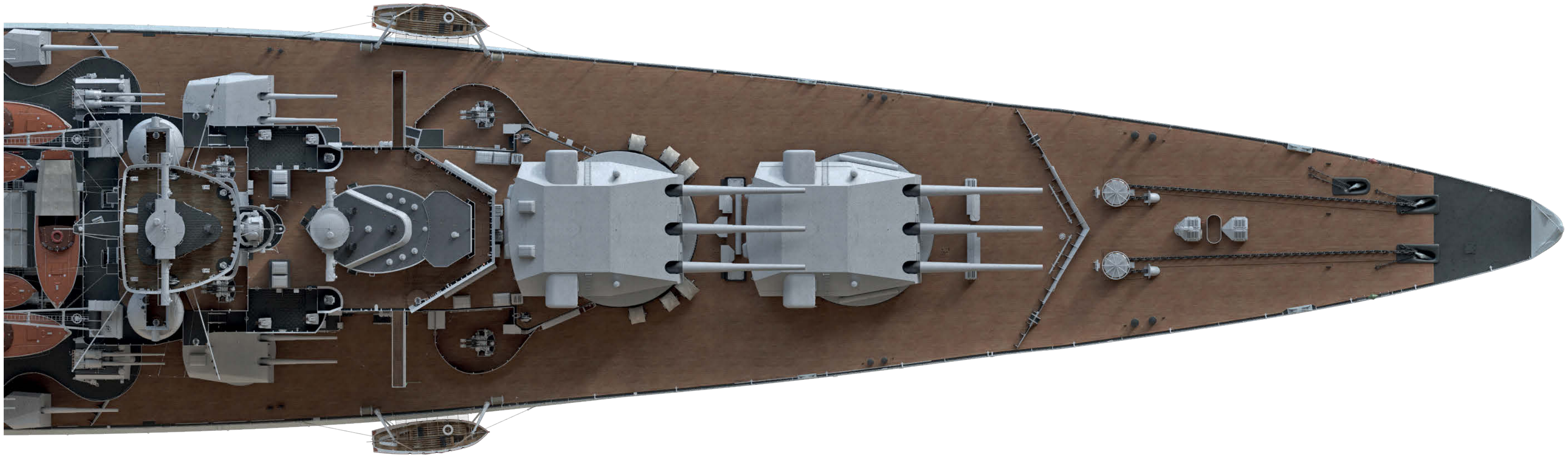

JANUARY 1939, COMMISSIONING, WILHELMSHAVEN

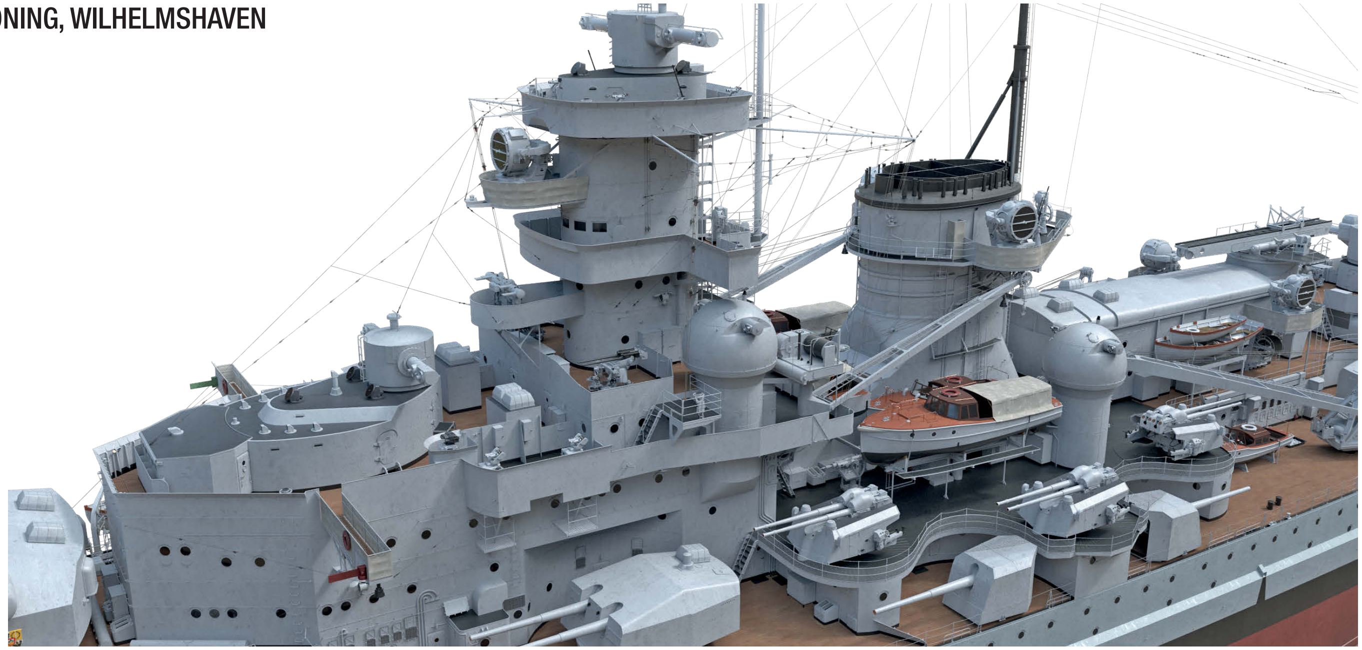

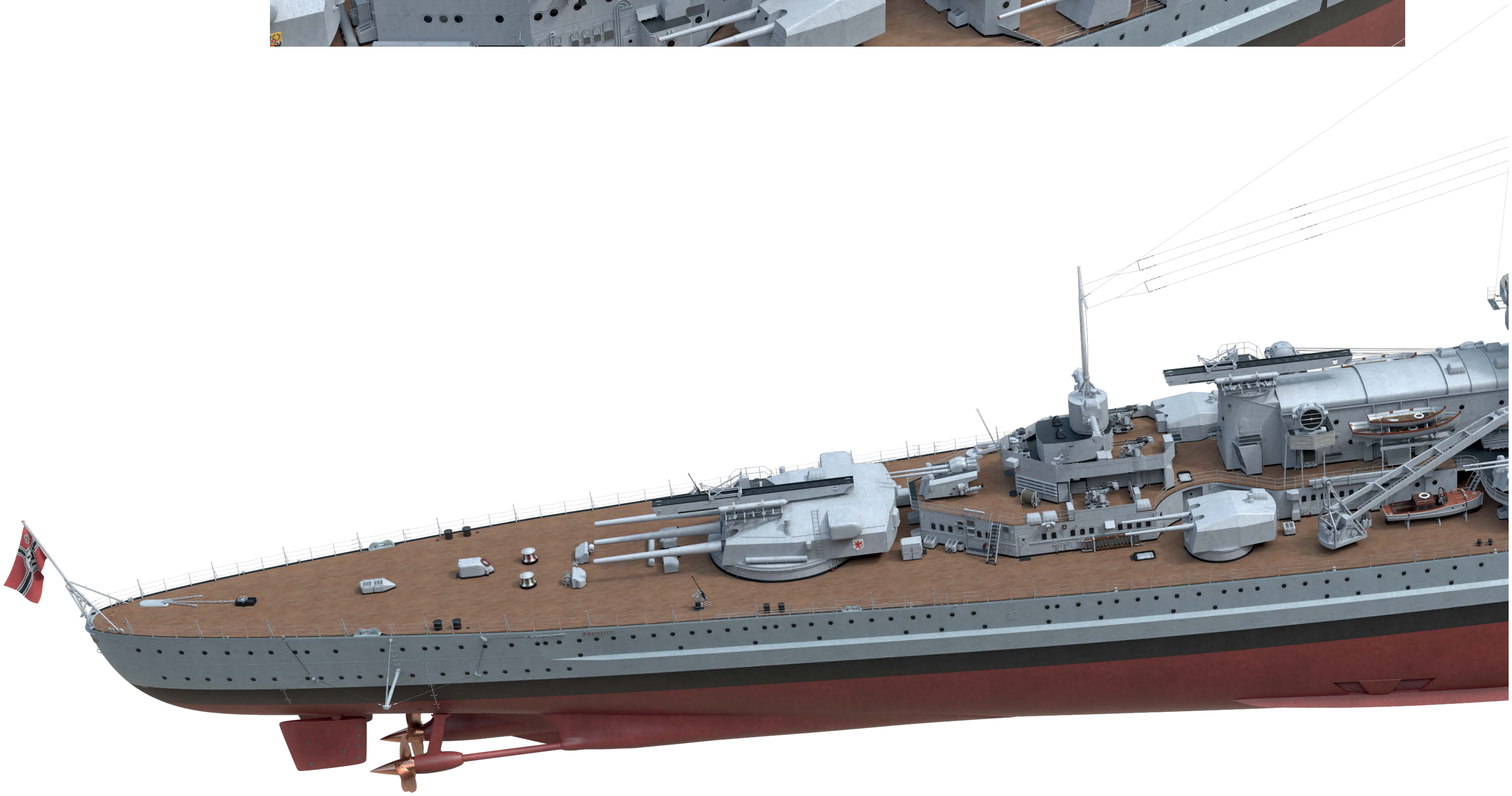

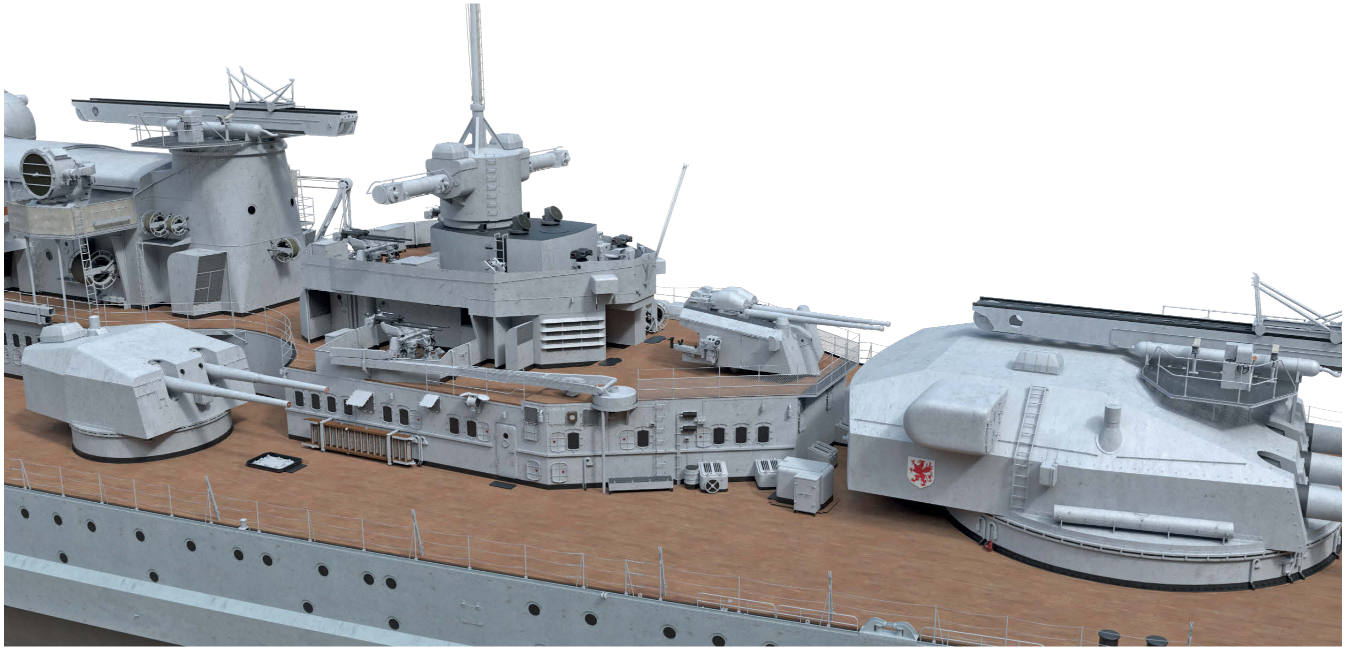

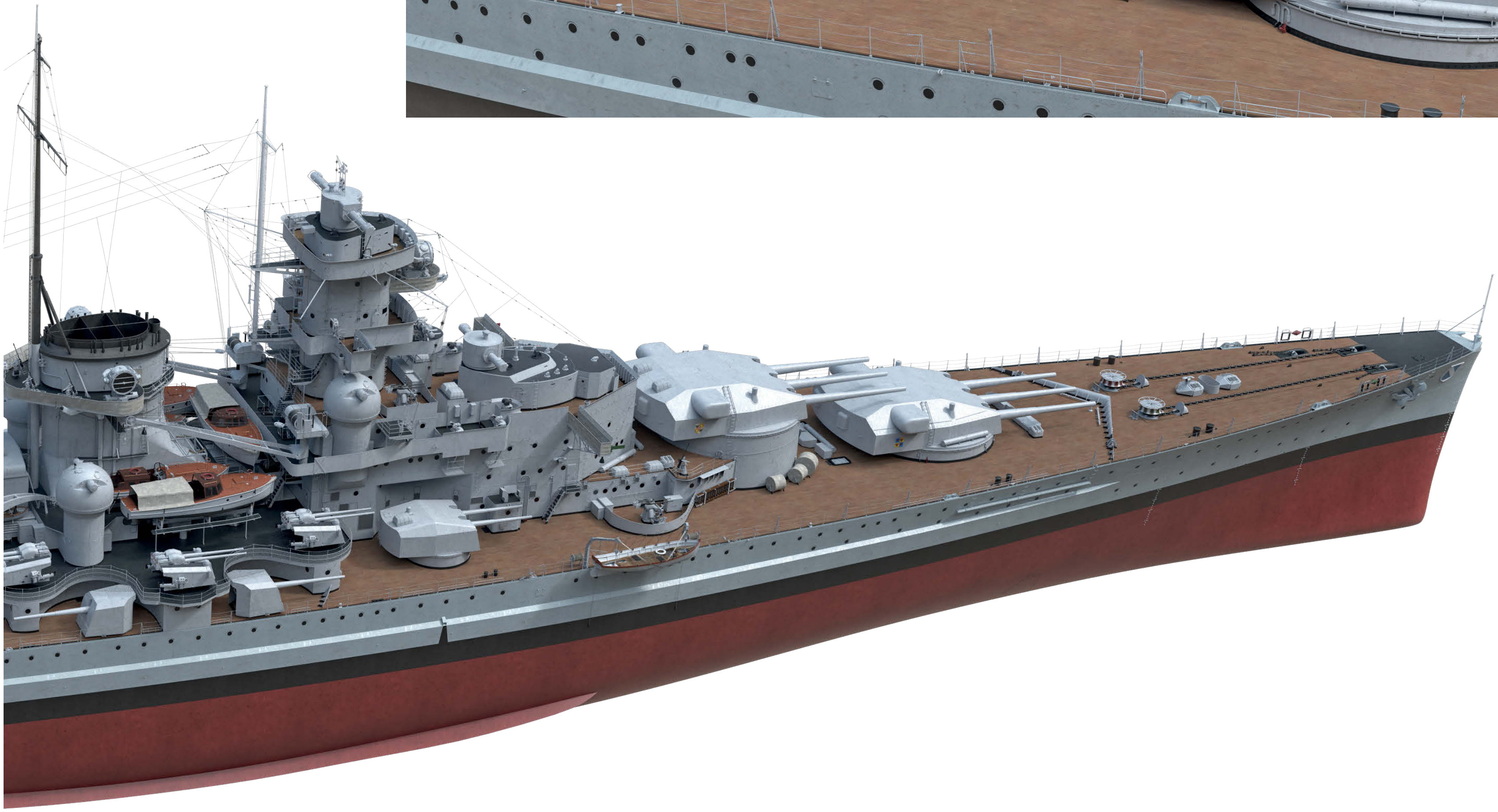

NOVEMBER 1939. Early-war air recognition markings included red main artillery turret tops with a white circle painted on turret B.

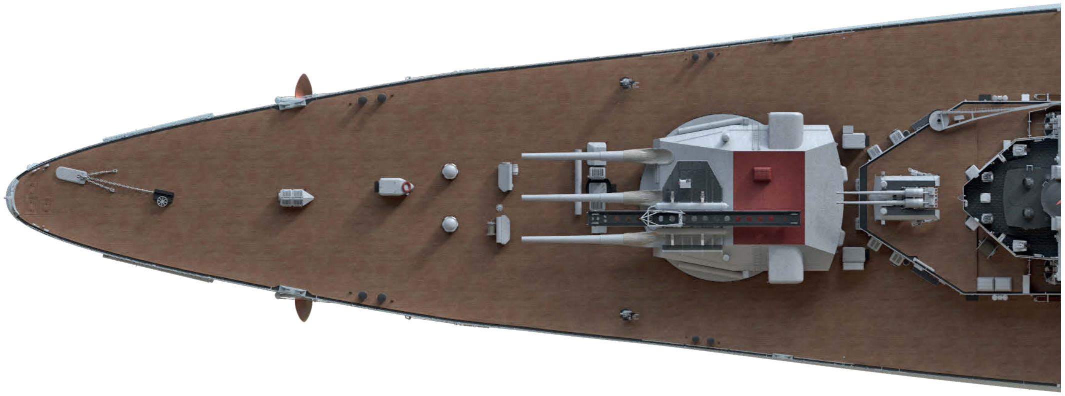

AUGUST 1939, WILHELMSHAVEN. The battleship's silhouette changed significantly following an extensive refit.

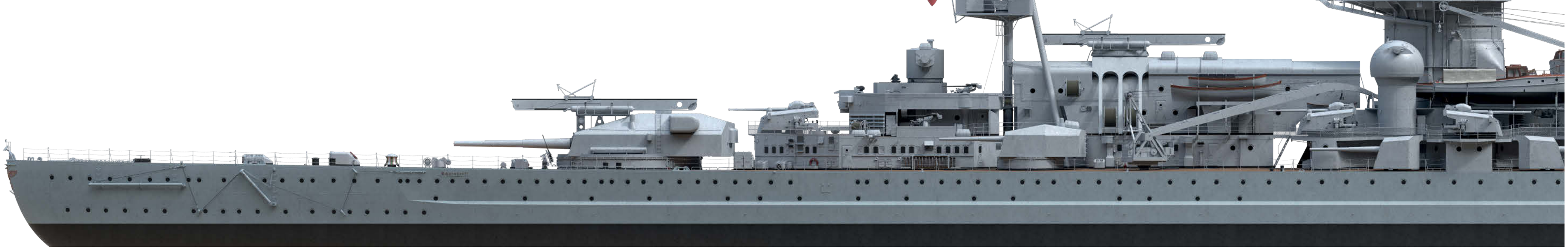

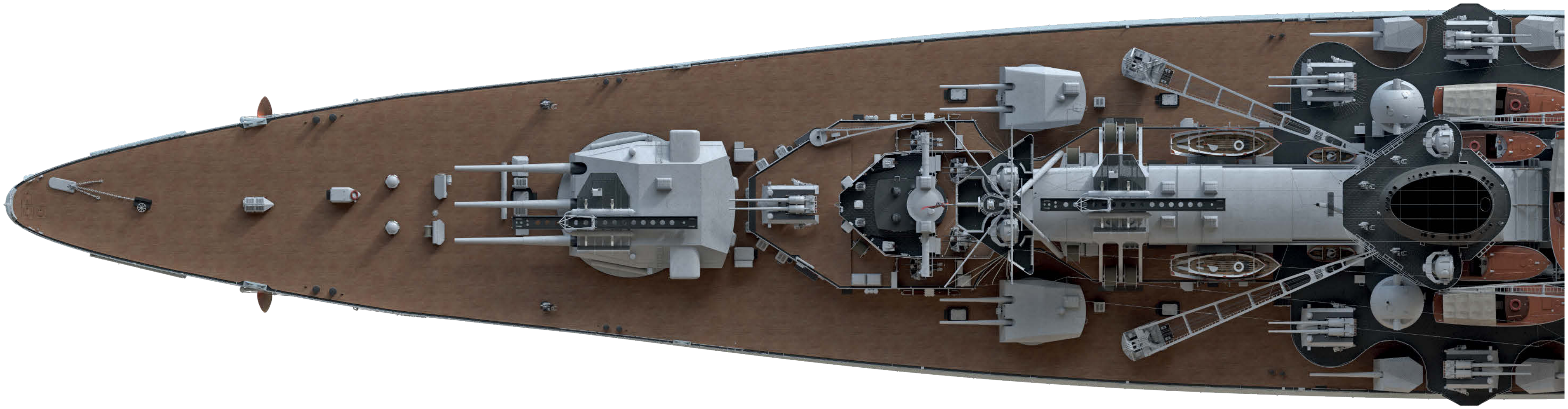

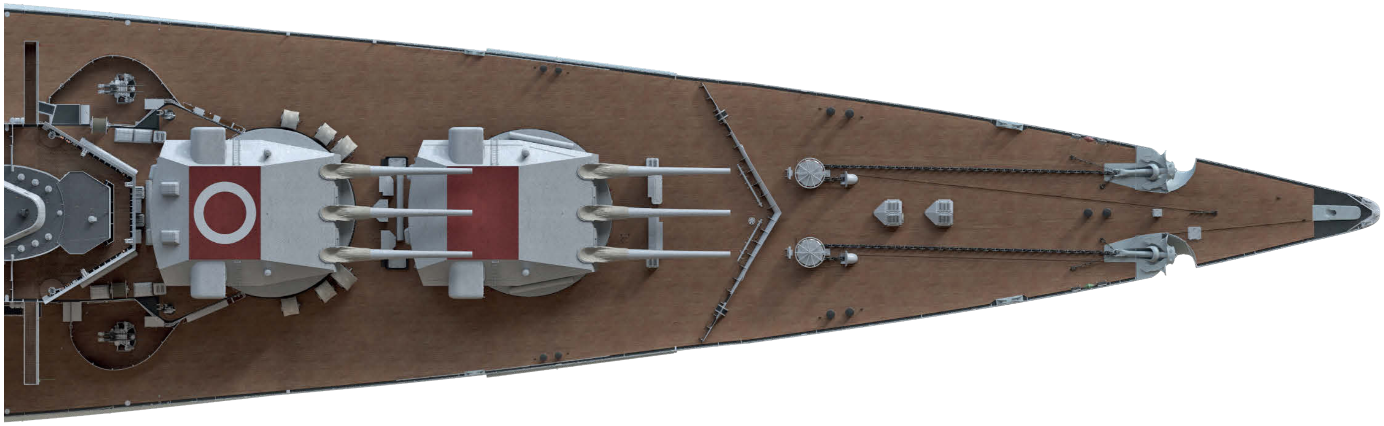

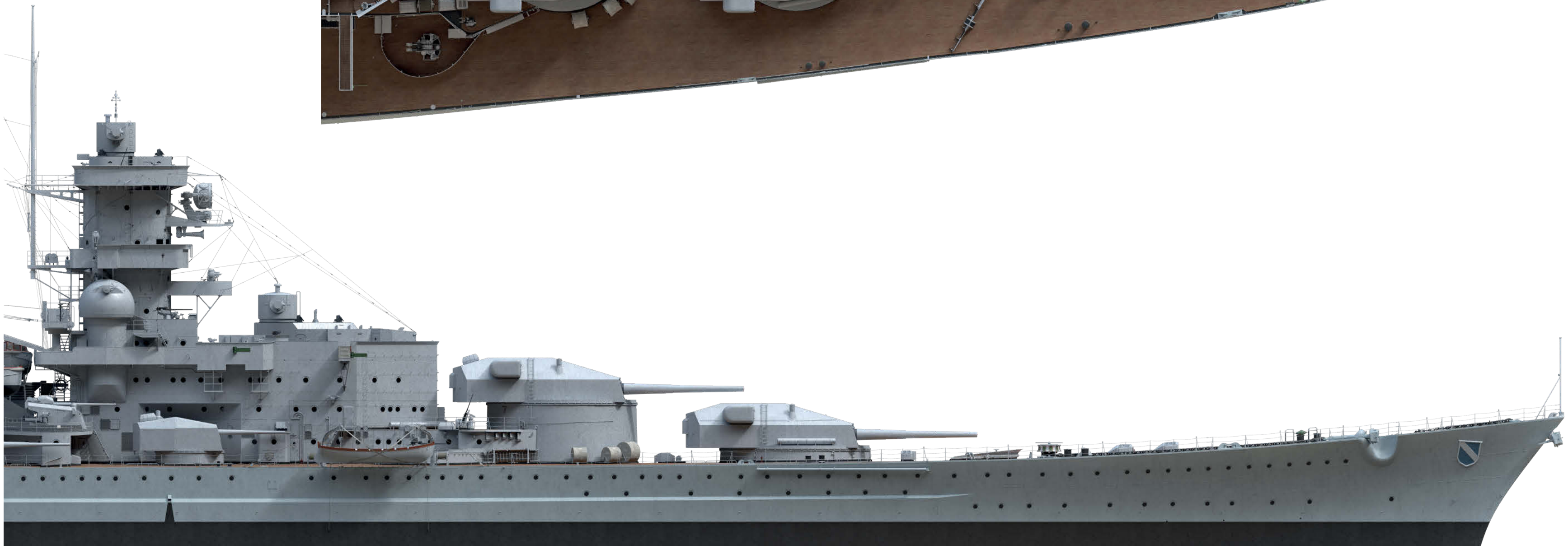

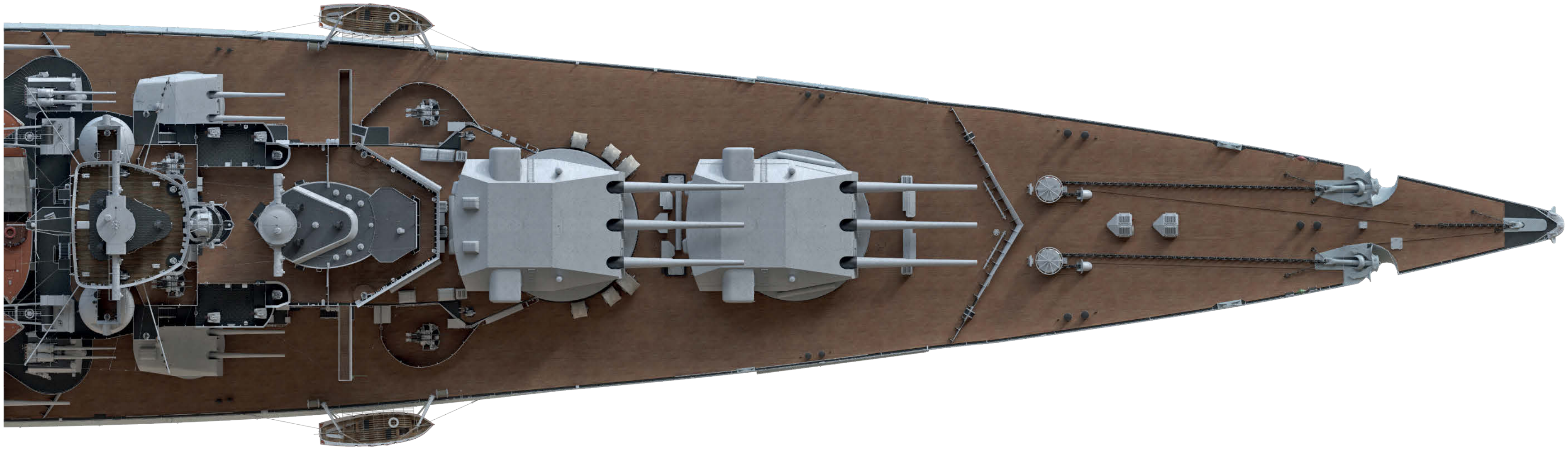

APRIL 1940, OPERATION *WESERÜBUNG*. Painted swastikas have been added on bow and stern, as well as main and secondary artillery turret tops have been painted yellow.

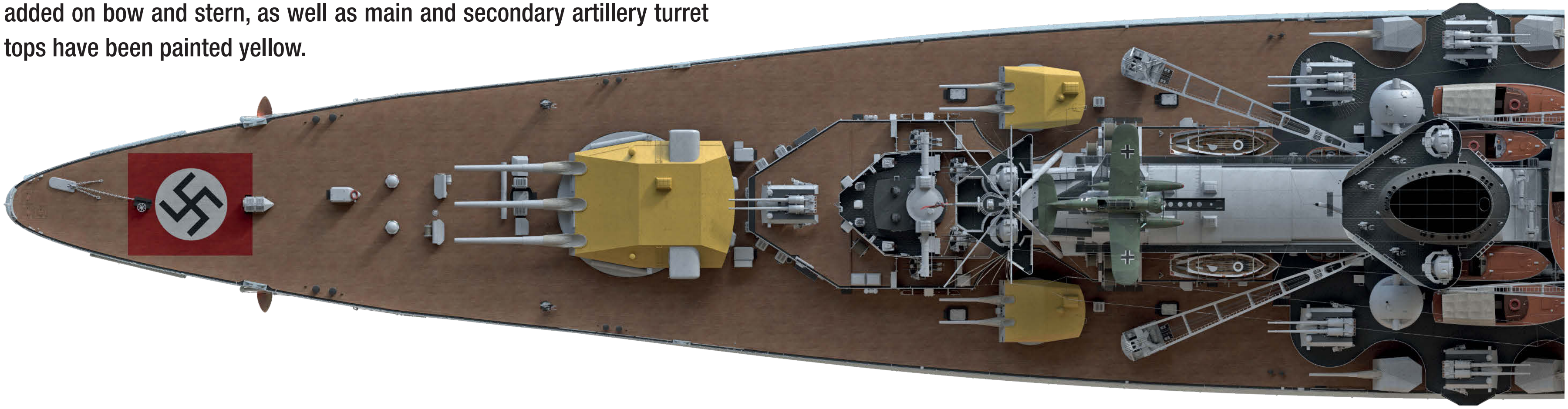

MAY 1940. Turret roofs have been painted red.

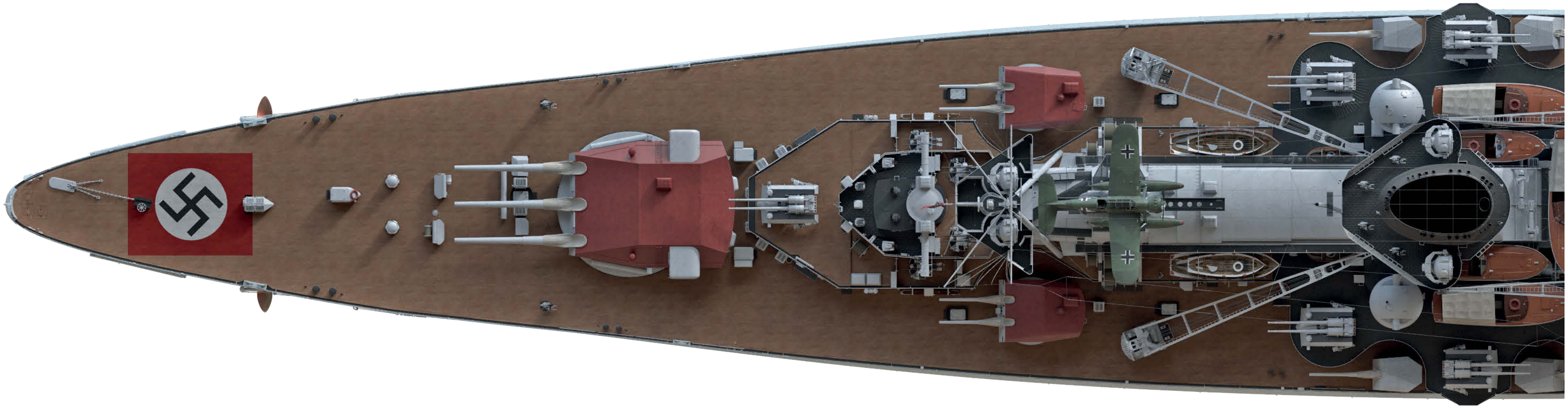

JUNE 1940, OPERATION *JUNO*. Turret roof colour has been changed to dark grey.

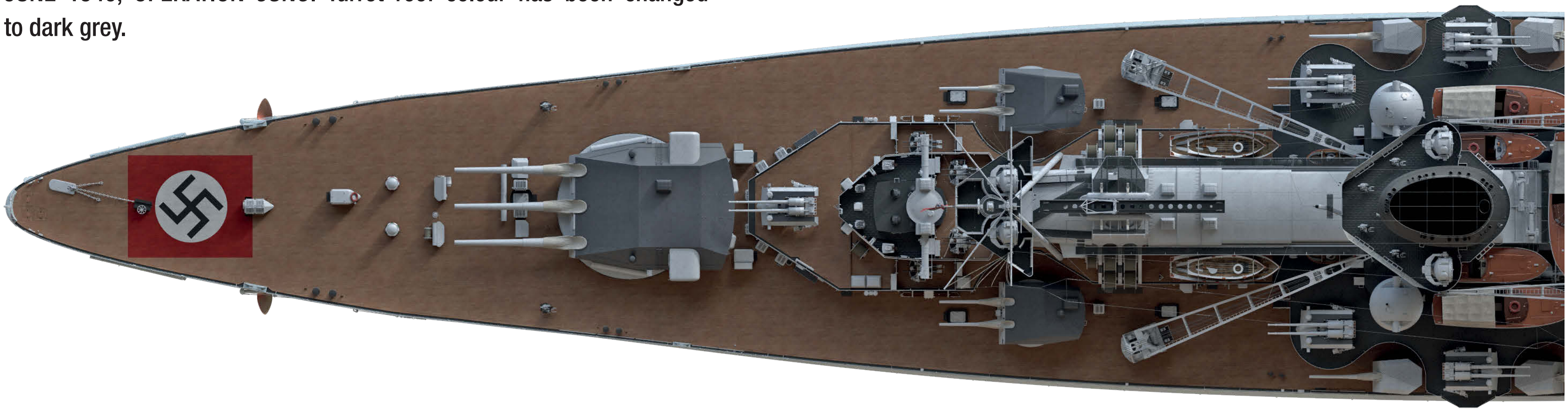

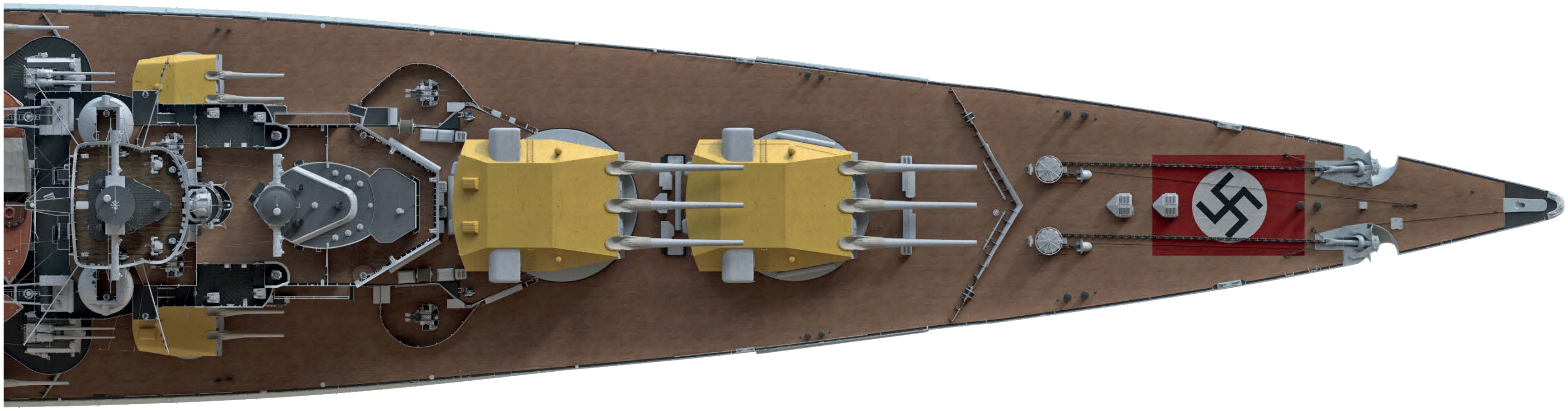

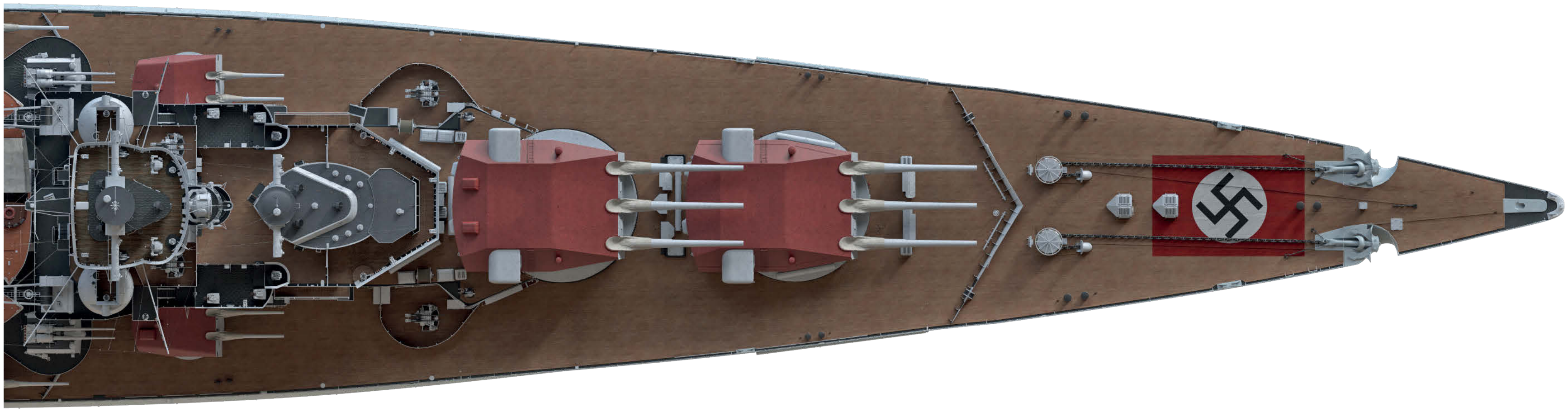

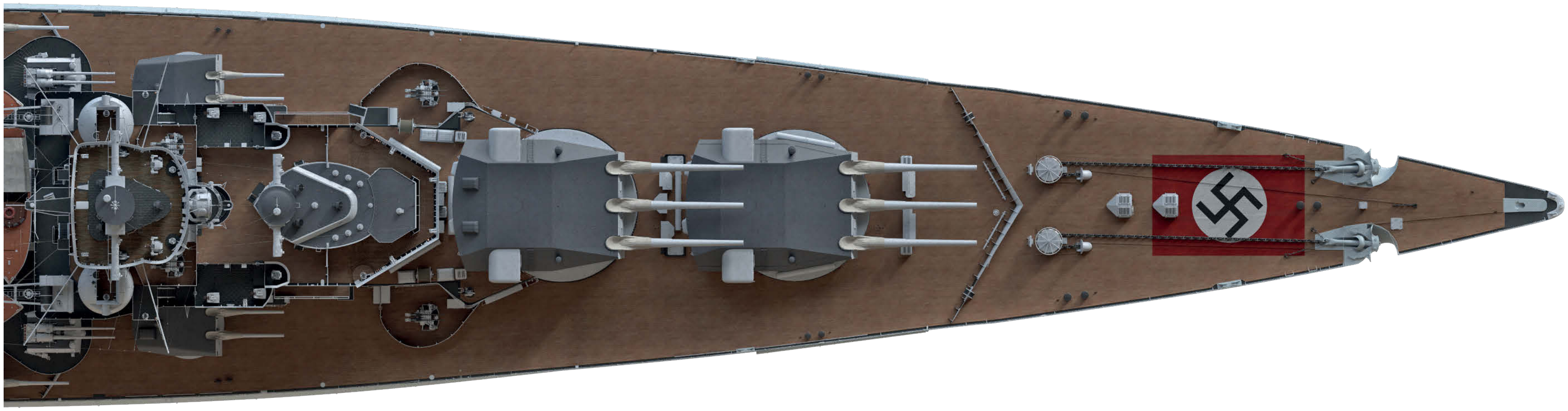

JUNE 1940, OPERATION *JUNO*

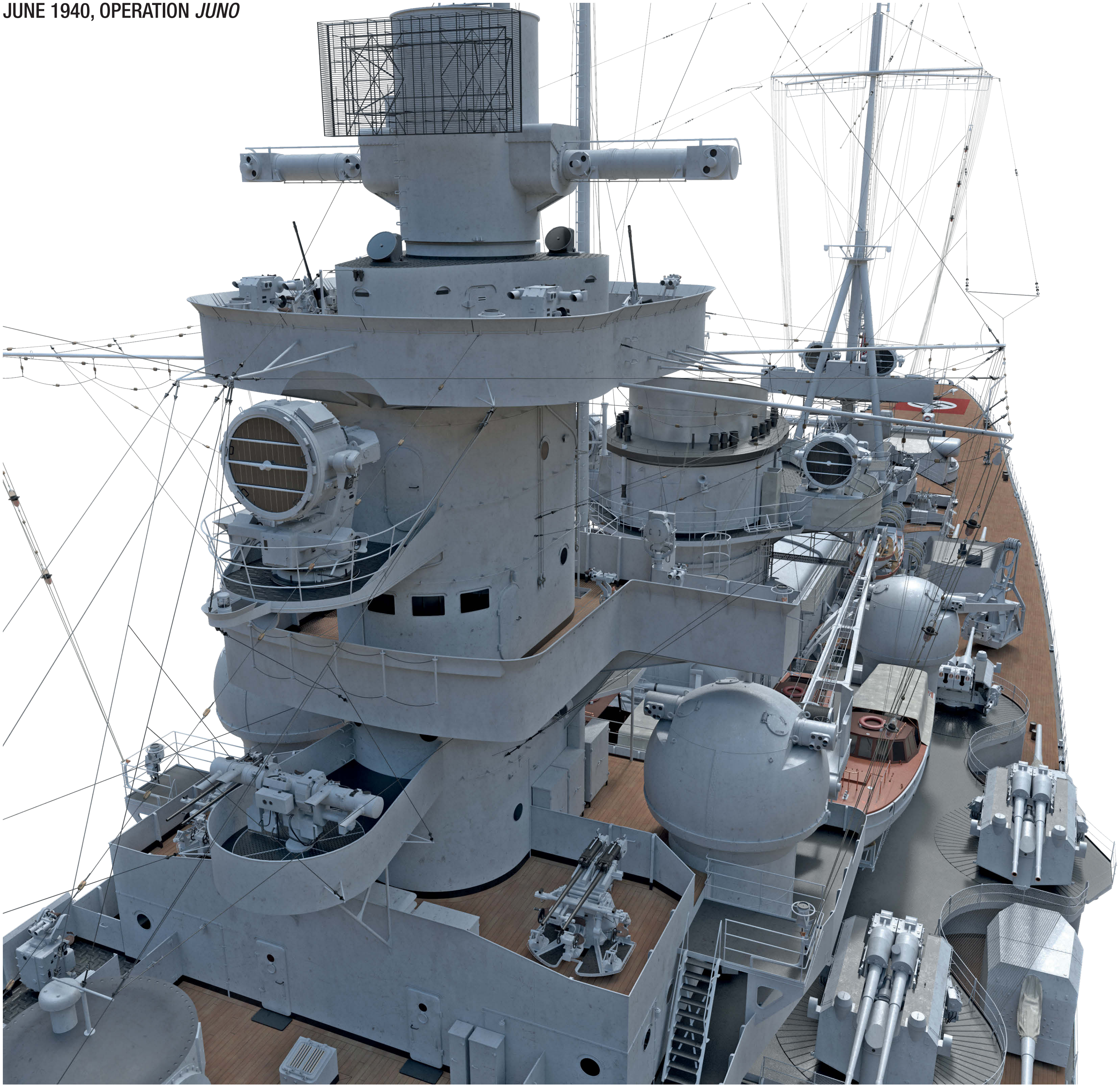

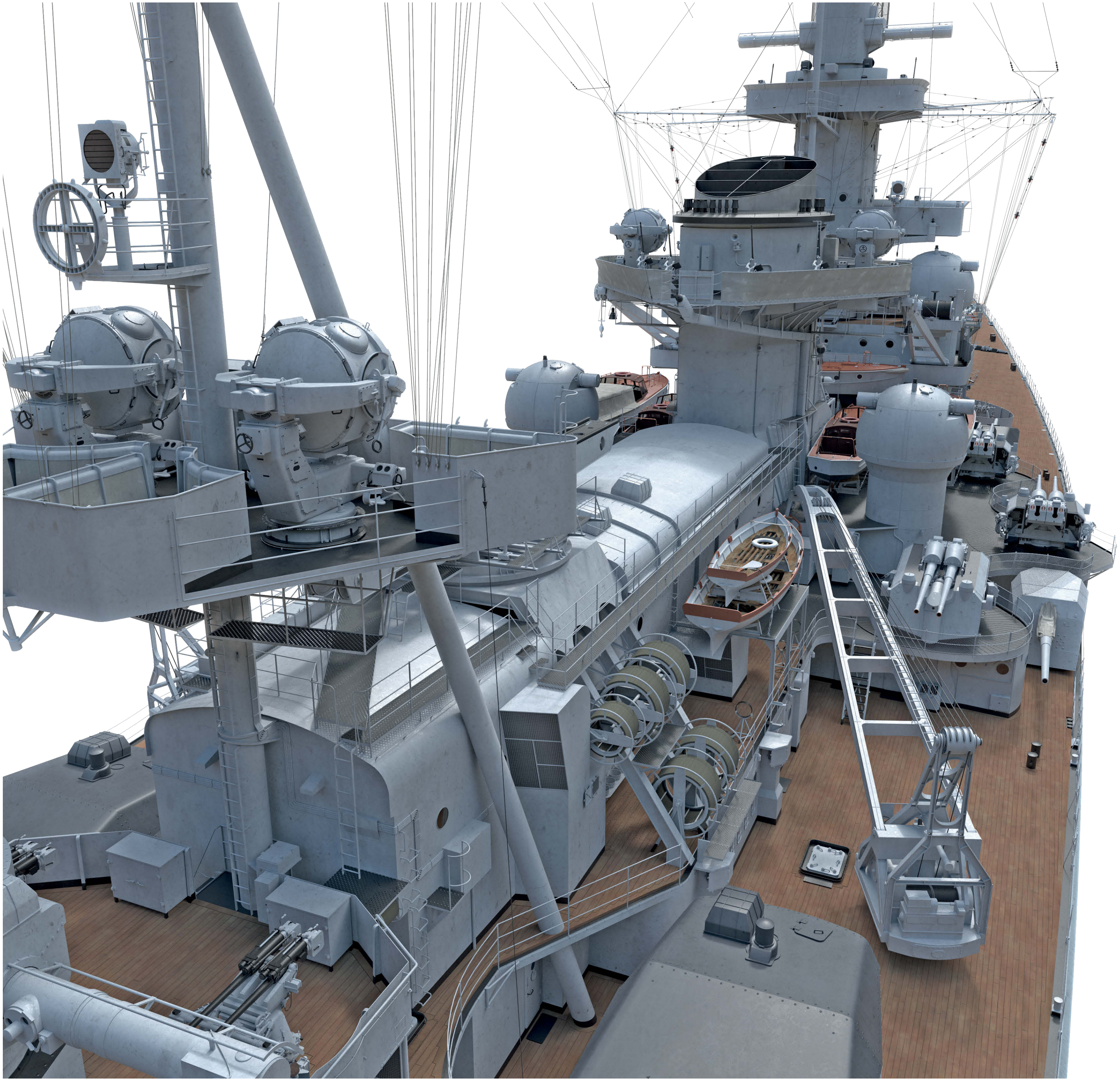

DECEMBER 1940, KIEL. The battleship is wearing a unique variant of the so-called Baltic camouflage, with numerous black and white stripes painted asymmetrically on her hull.

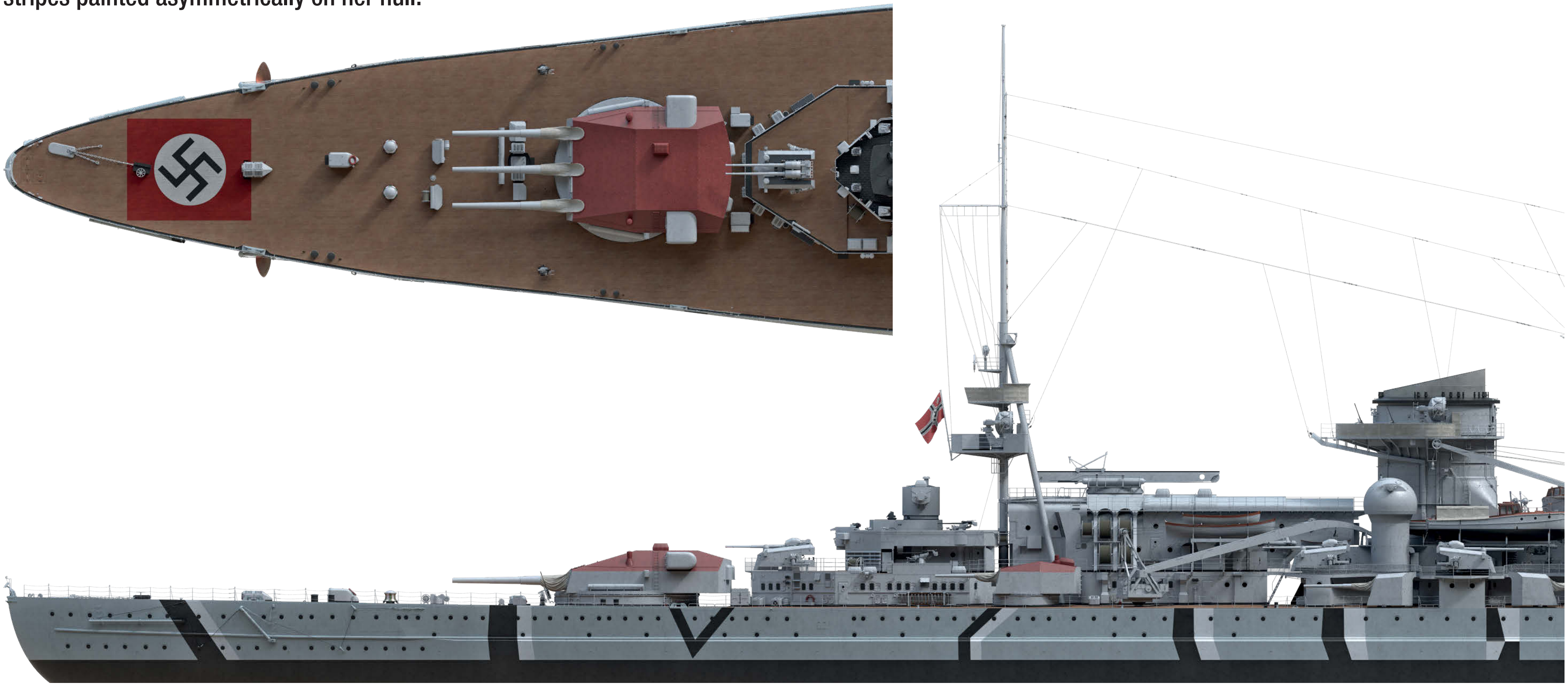

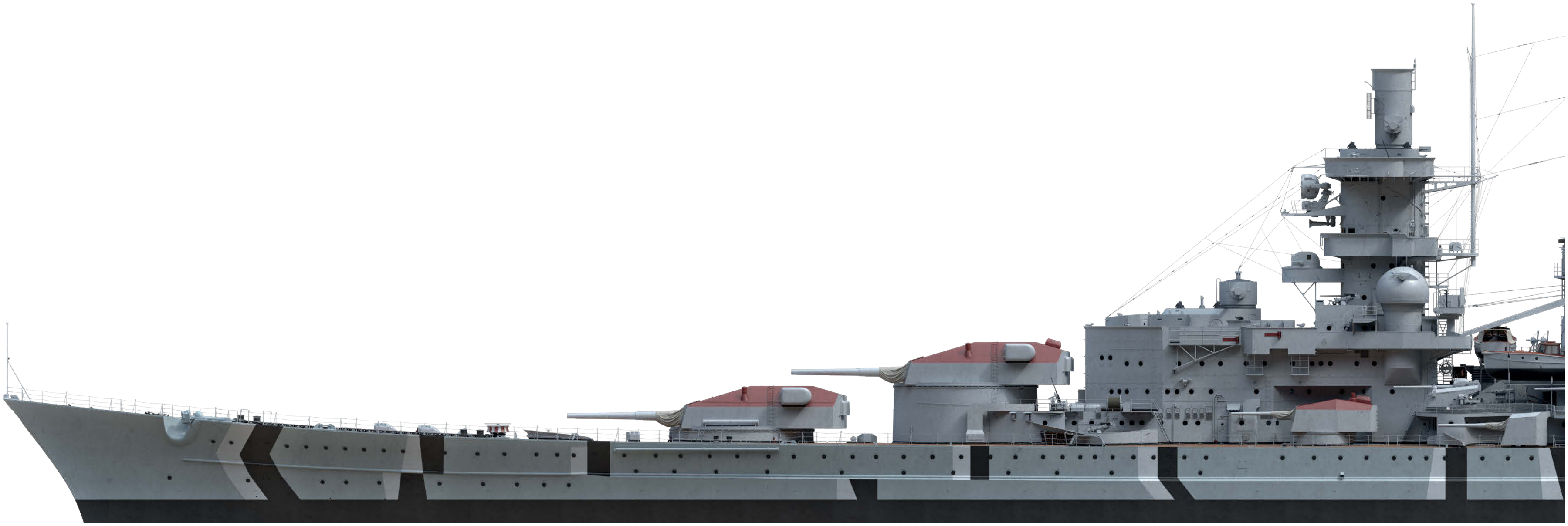

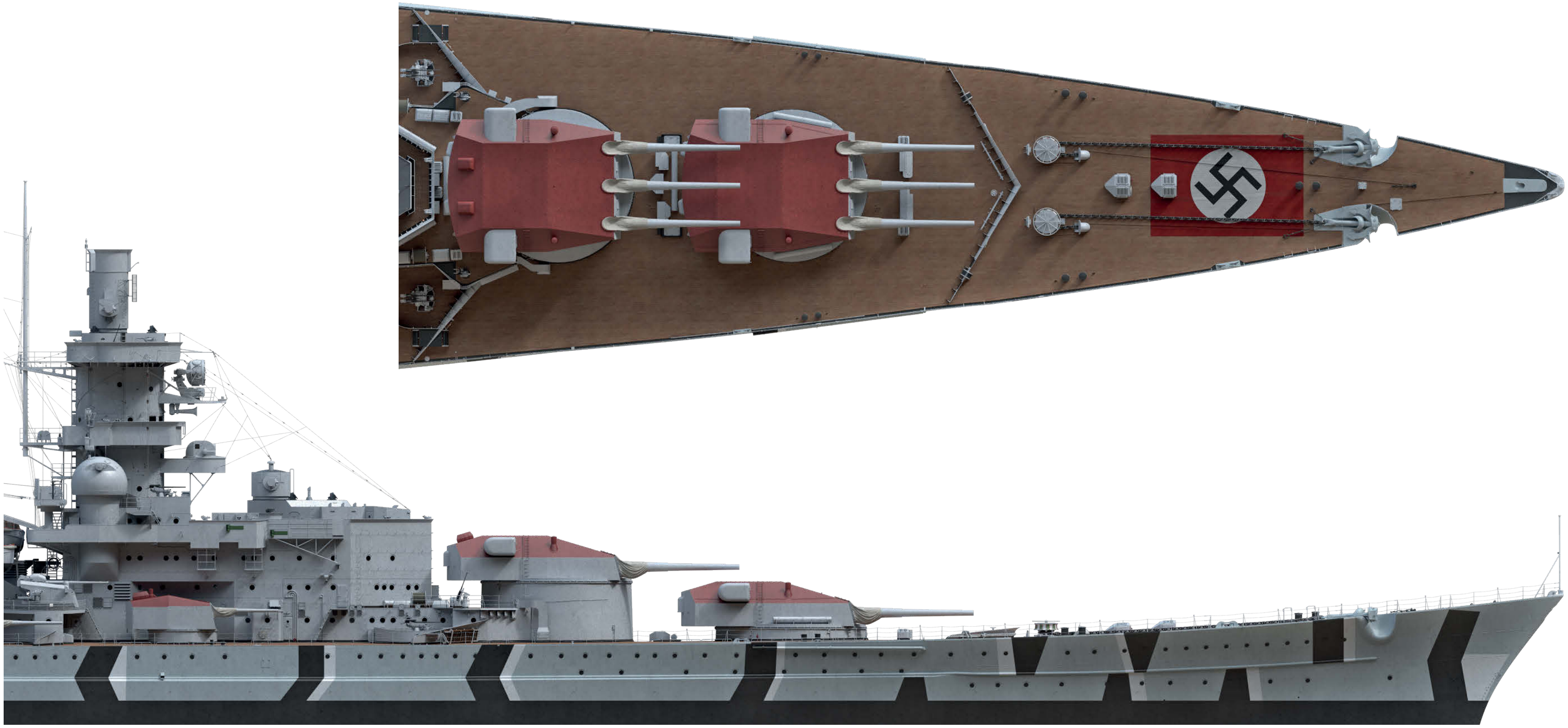

DECEMBER 1940, KIEL

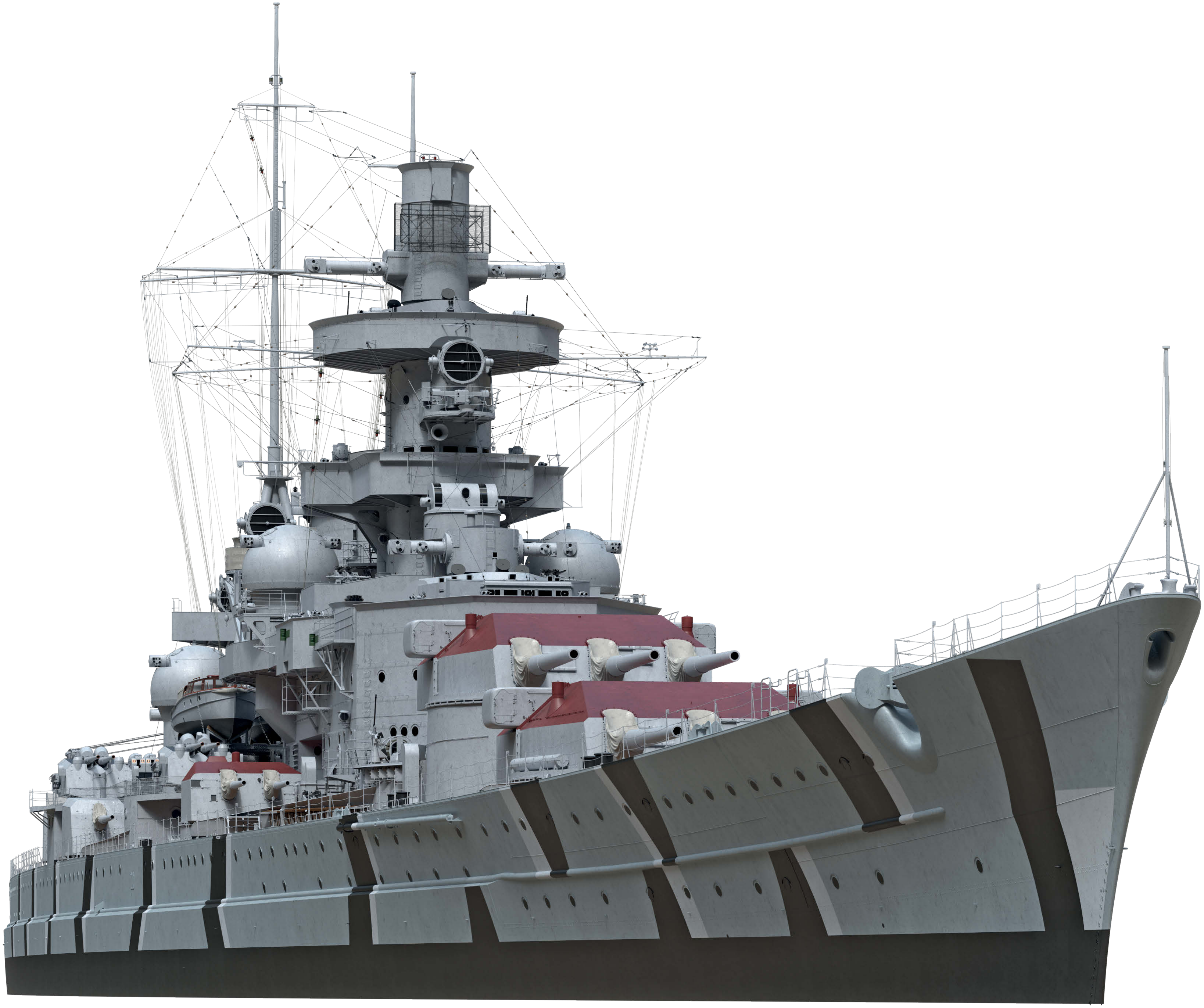

MARCH 1941, OPERATION *BERLIN*. Remains of the previous camouflage are showing on the battleship's hull. When approaching France, the turret tops were painted yellow and swastikas on deck uncovered.

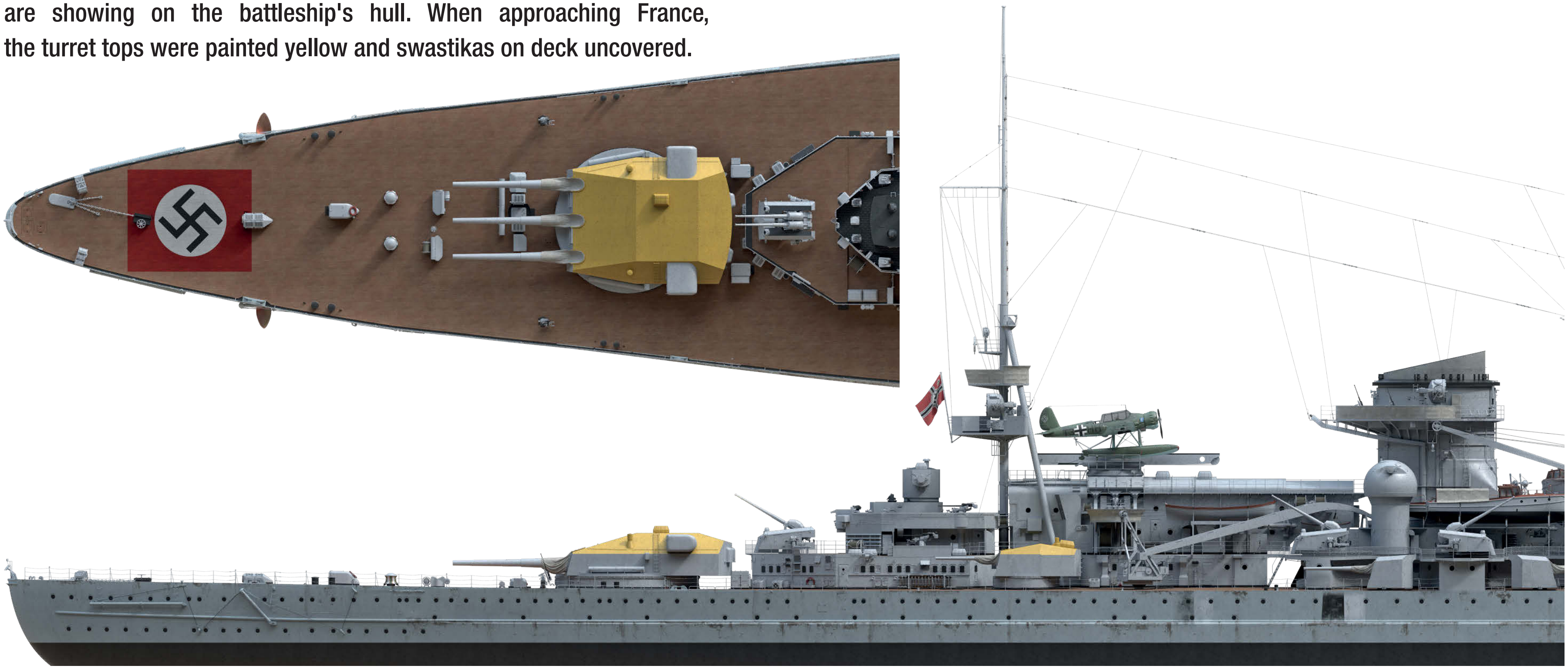

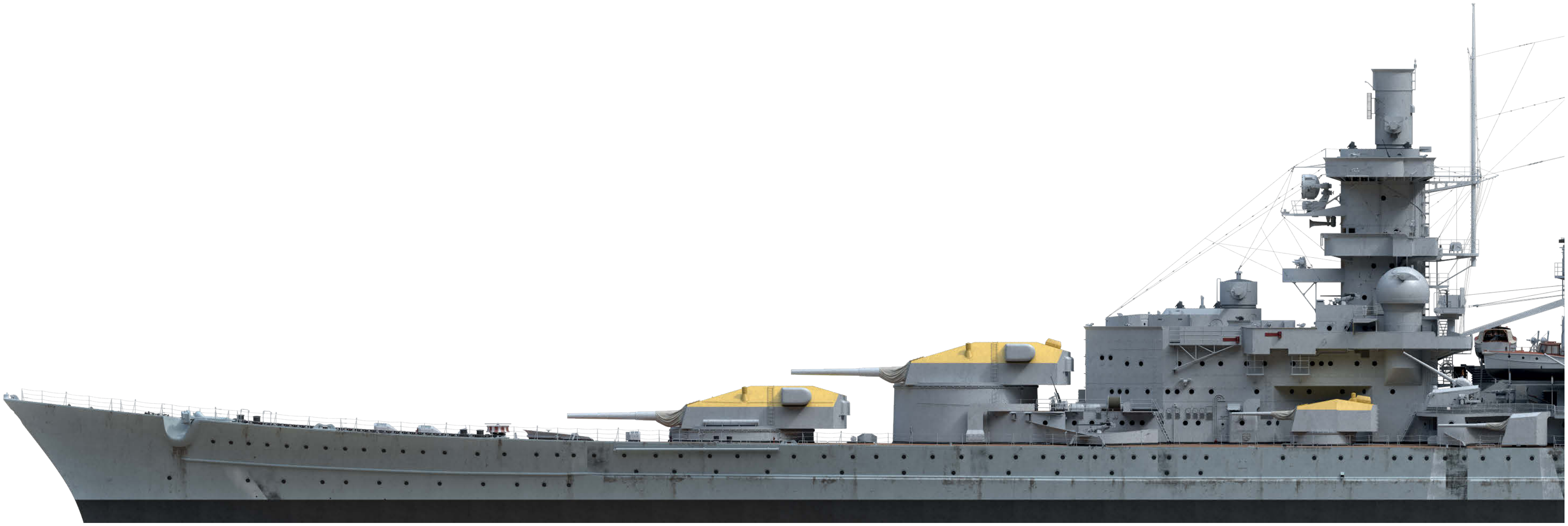

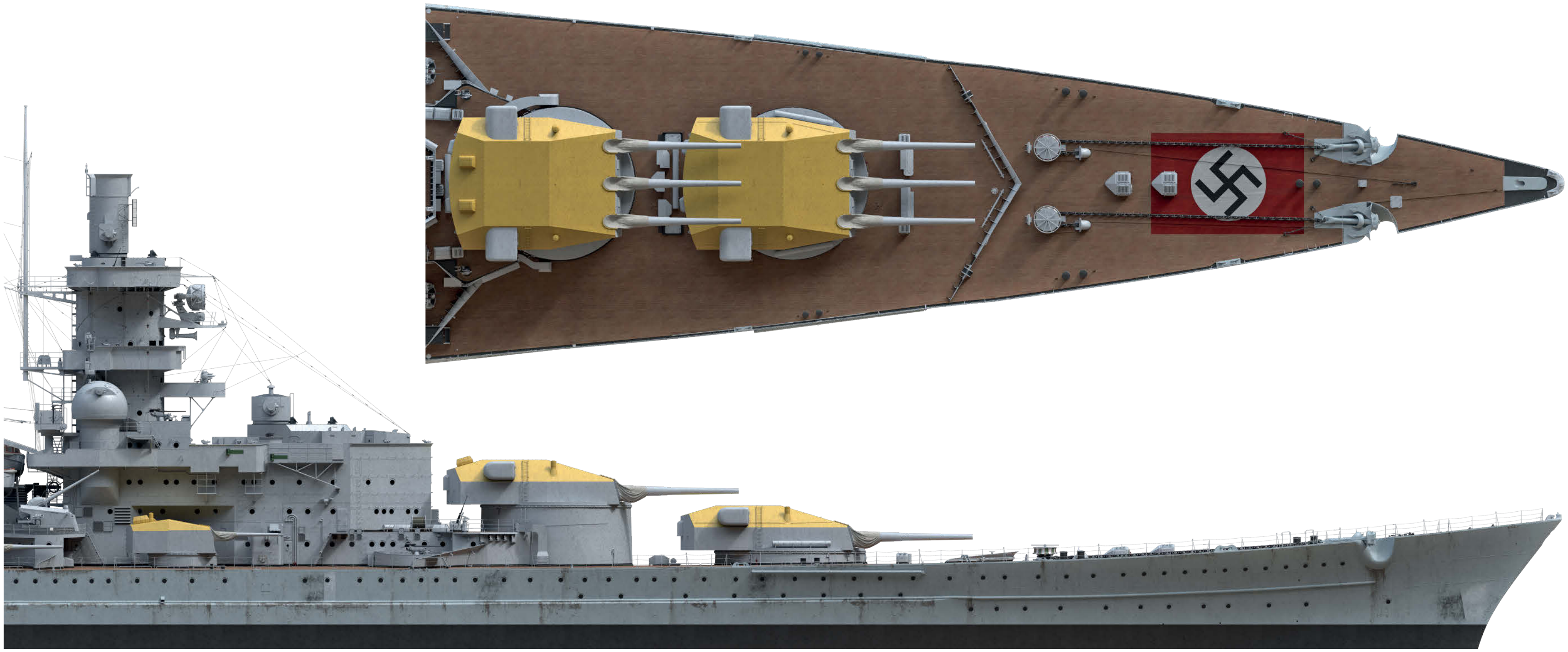

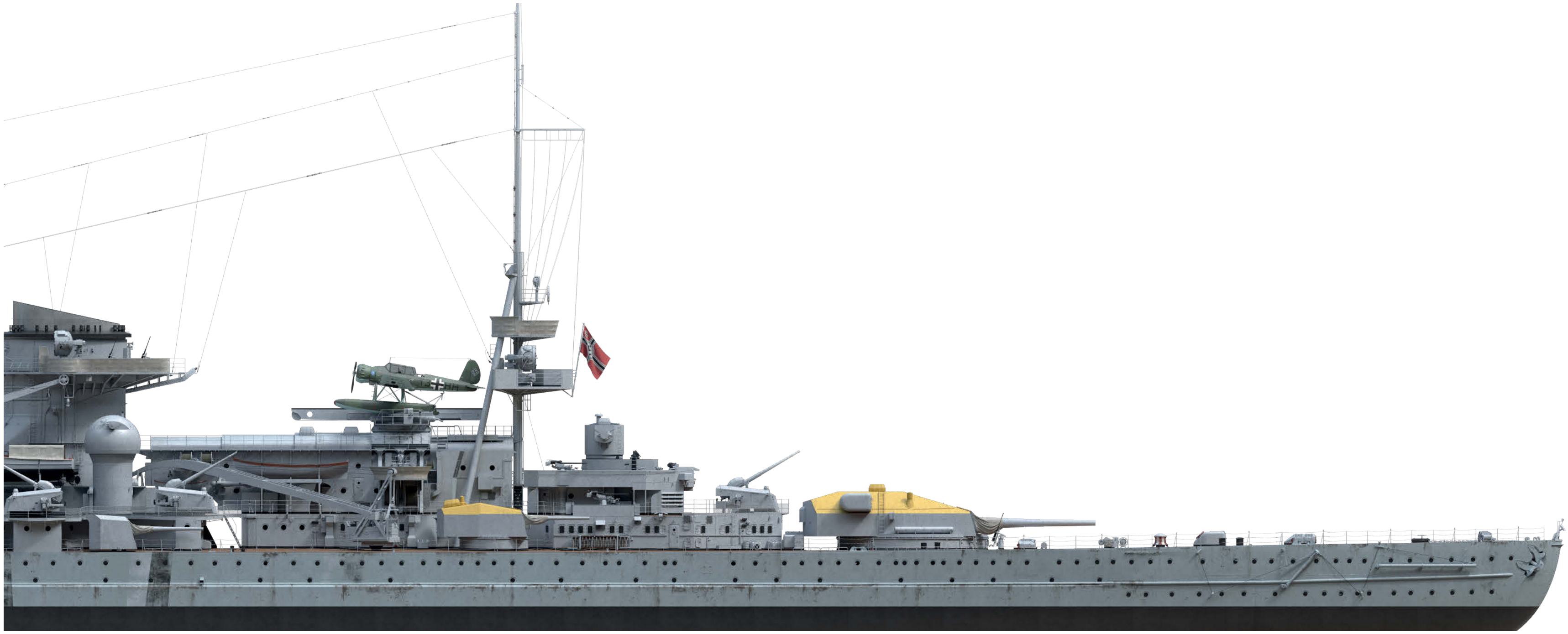

MARCH 1941, OPERATION *BERLIN*

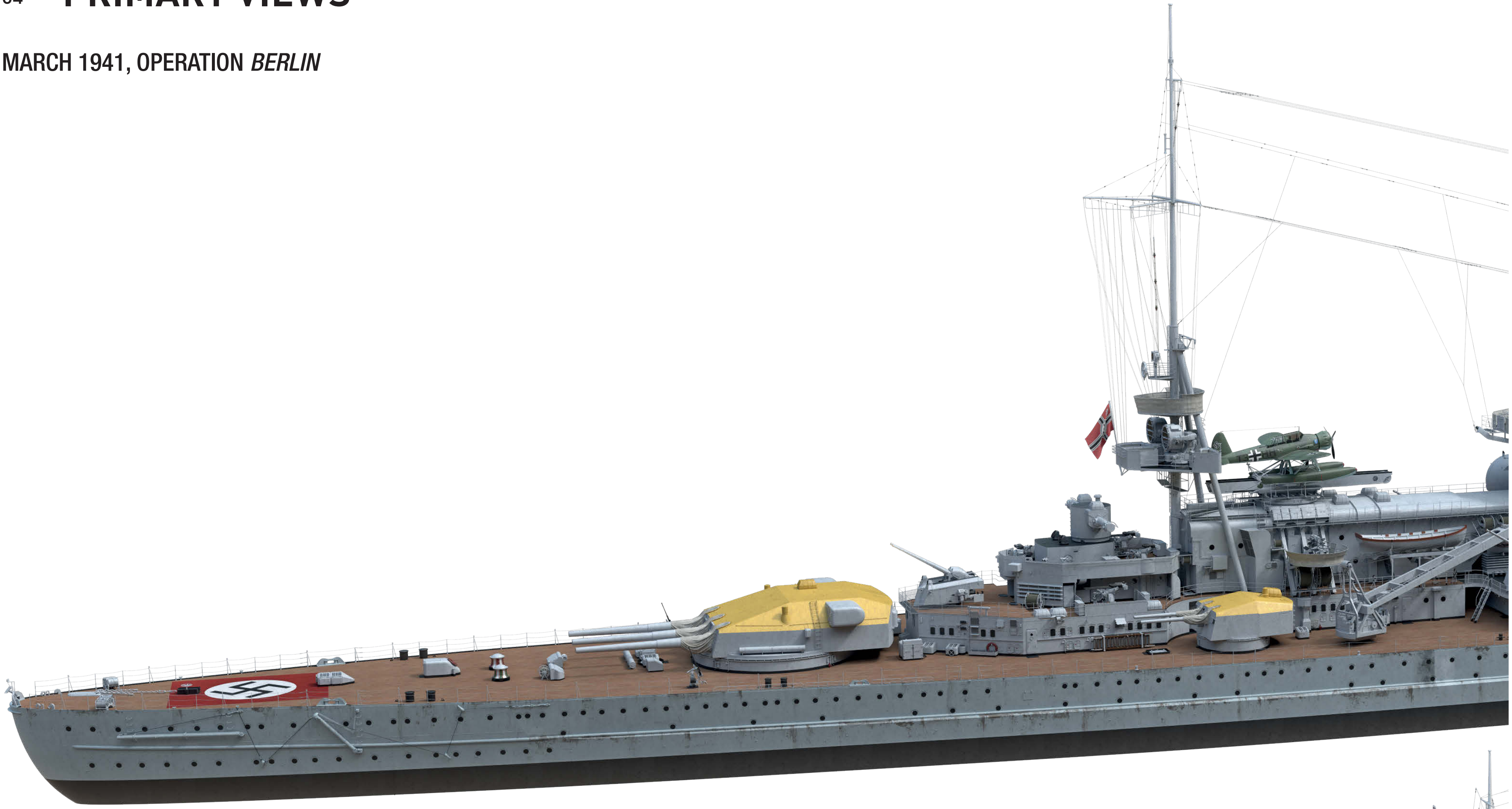

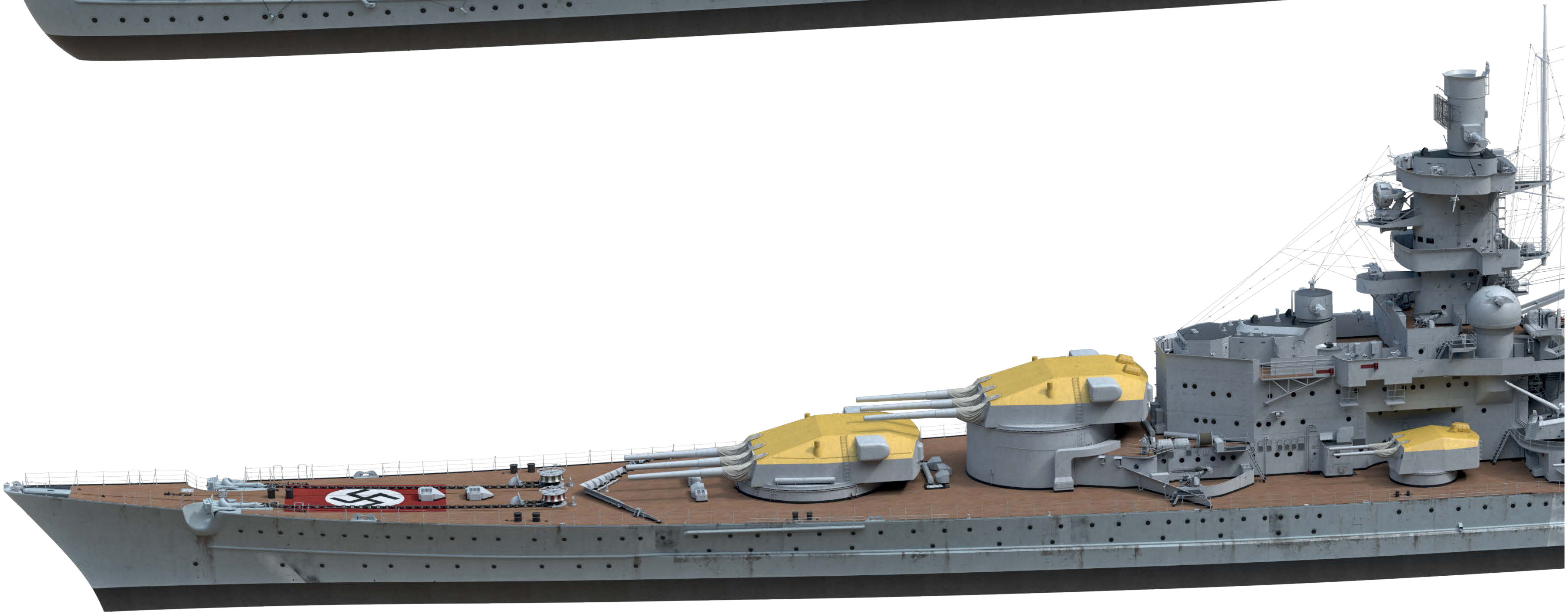

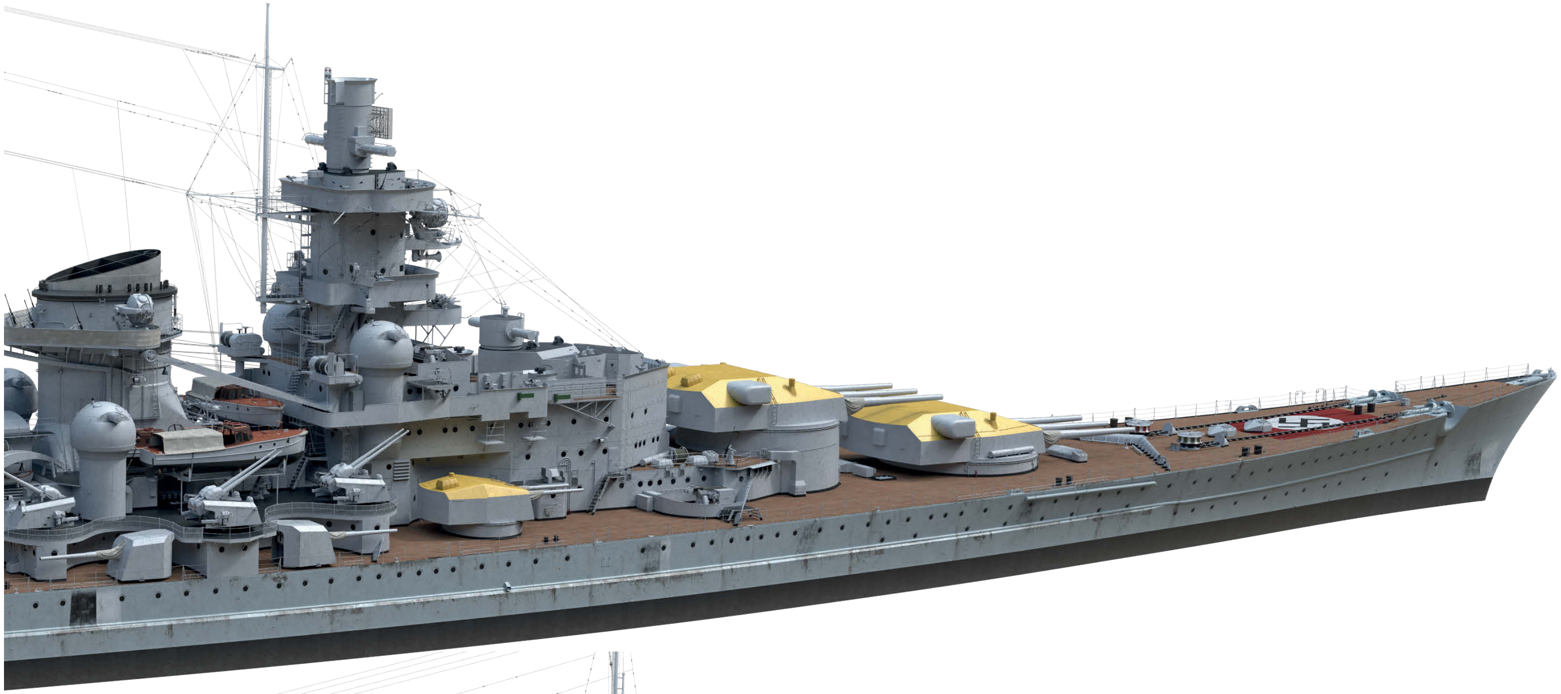

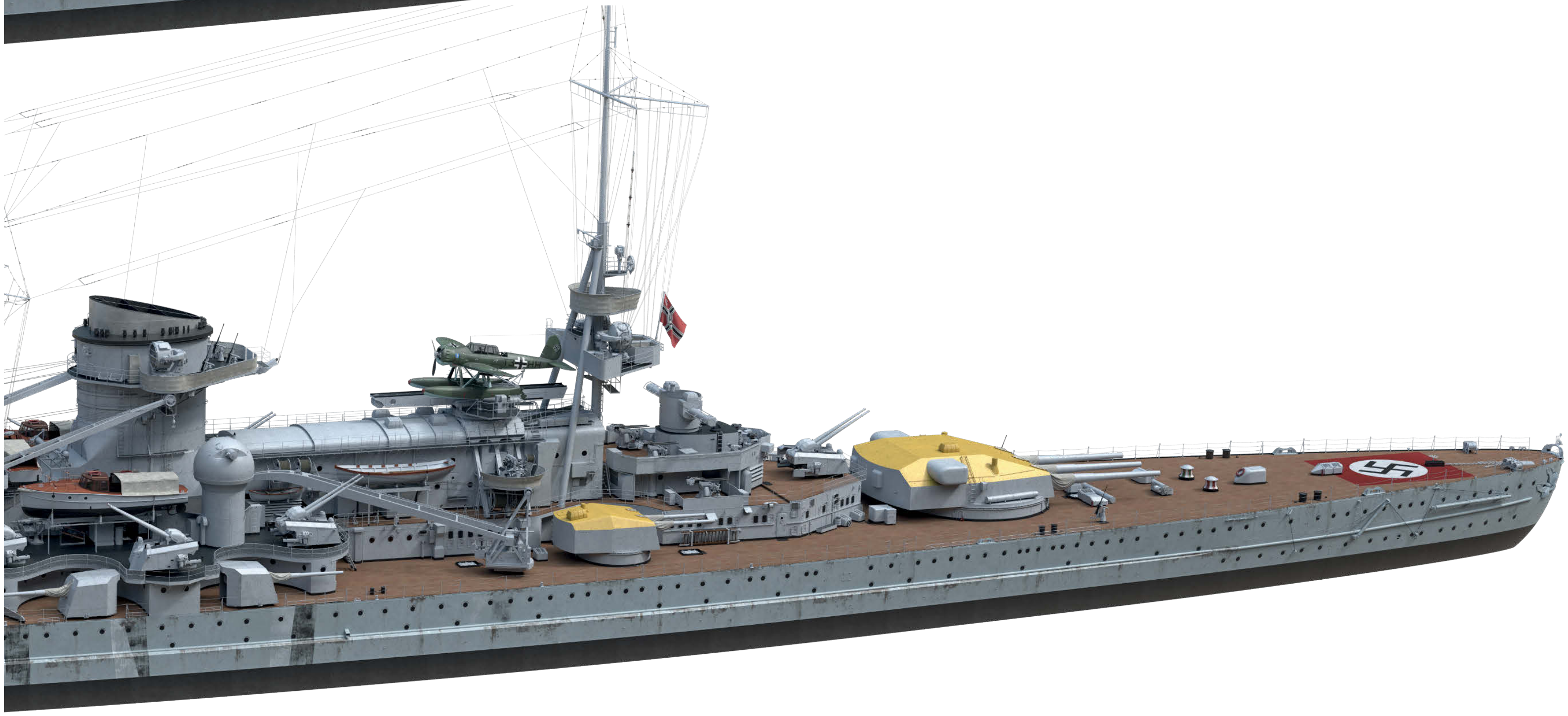

FEBRUARY 1942, OPERATION *CERBERUS*. The battleship is wearing a scheme with dark stripes on her lower hull and random small dark spots on her superstructures. Air recognition colour for the turret tops is light blue.

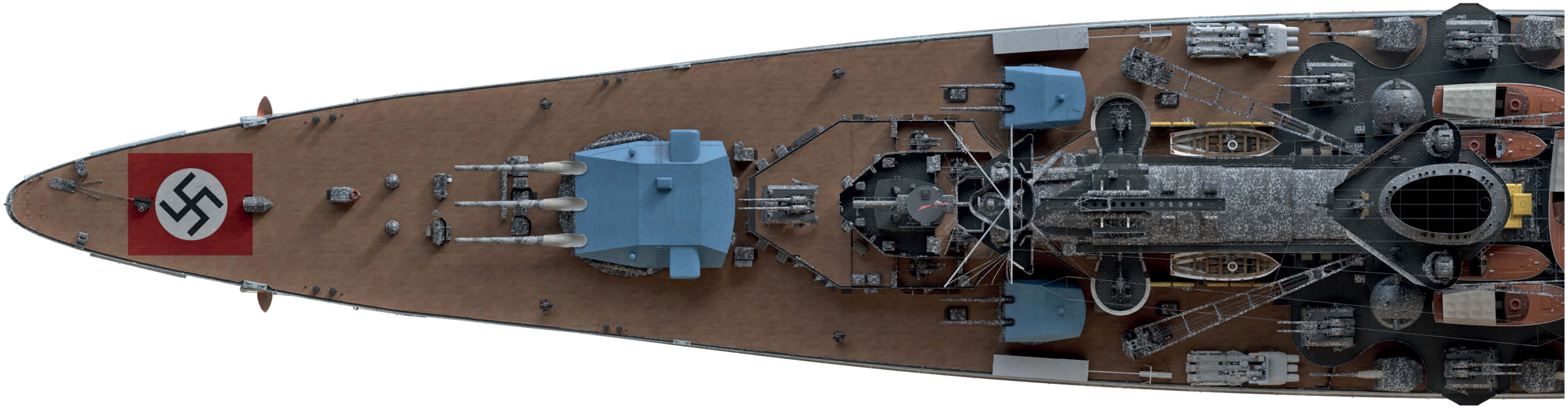

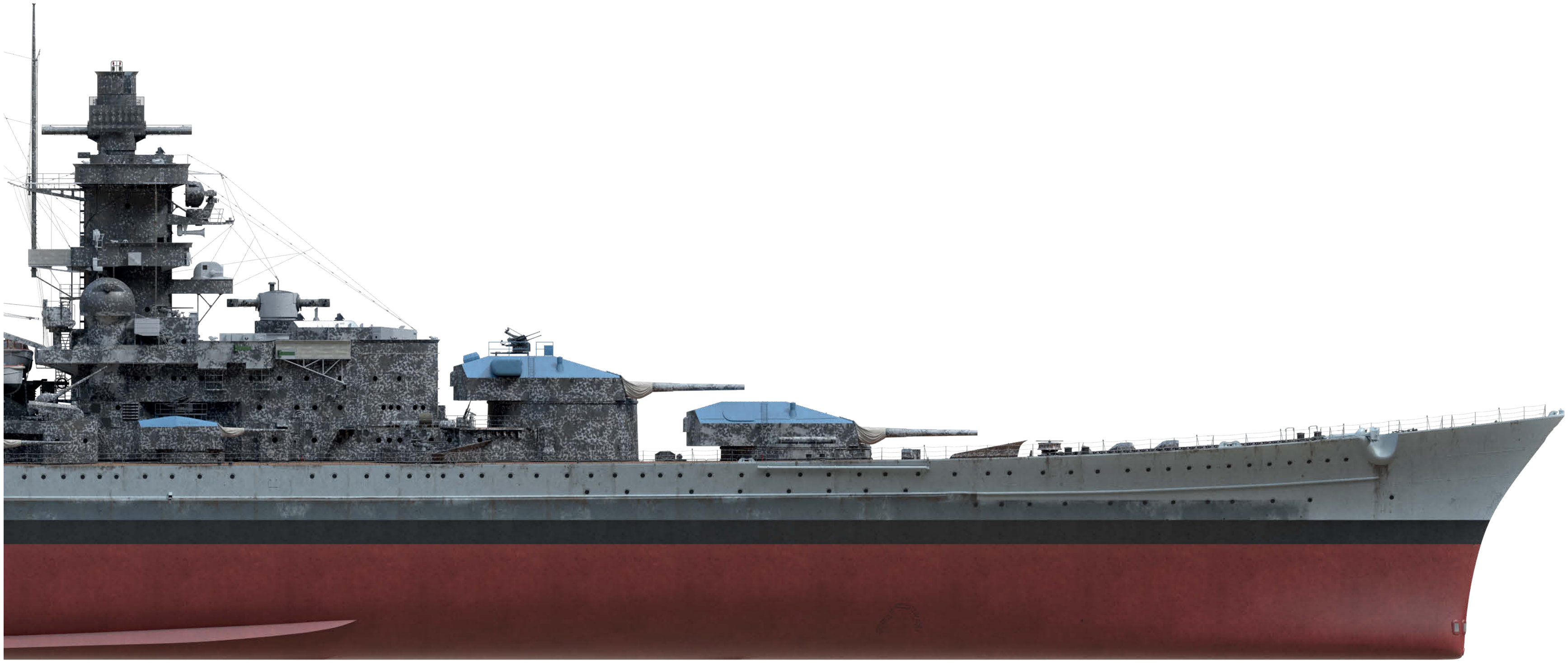

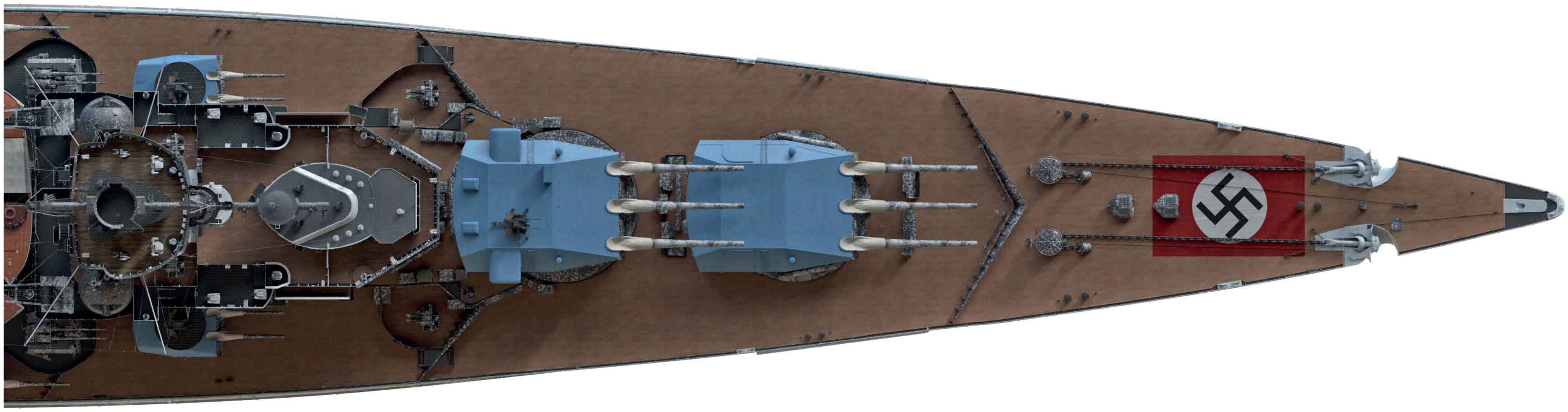

FEBRUARY 1942, OPERATION *CERBERUS*

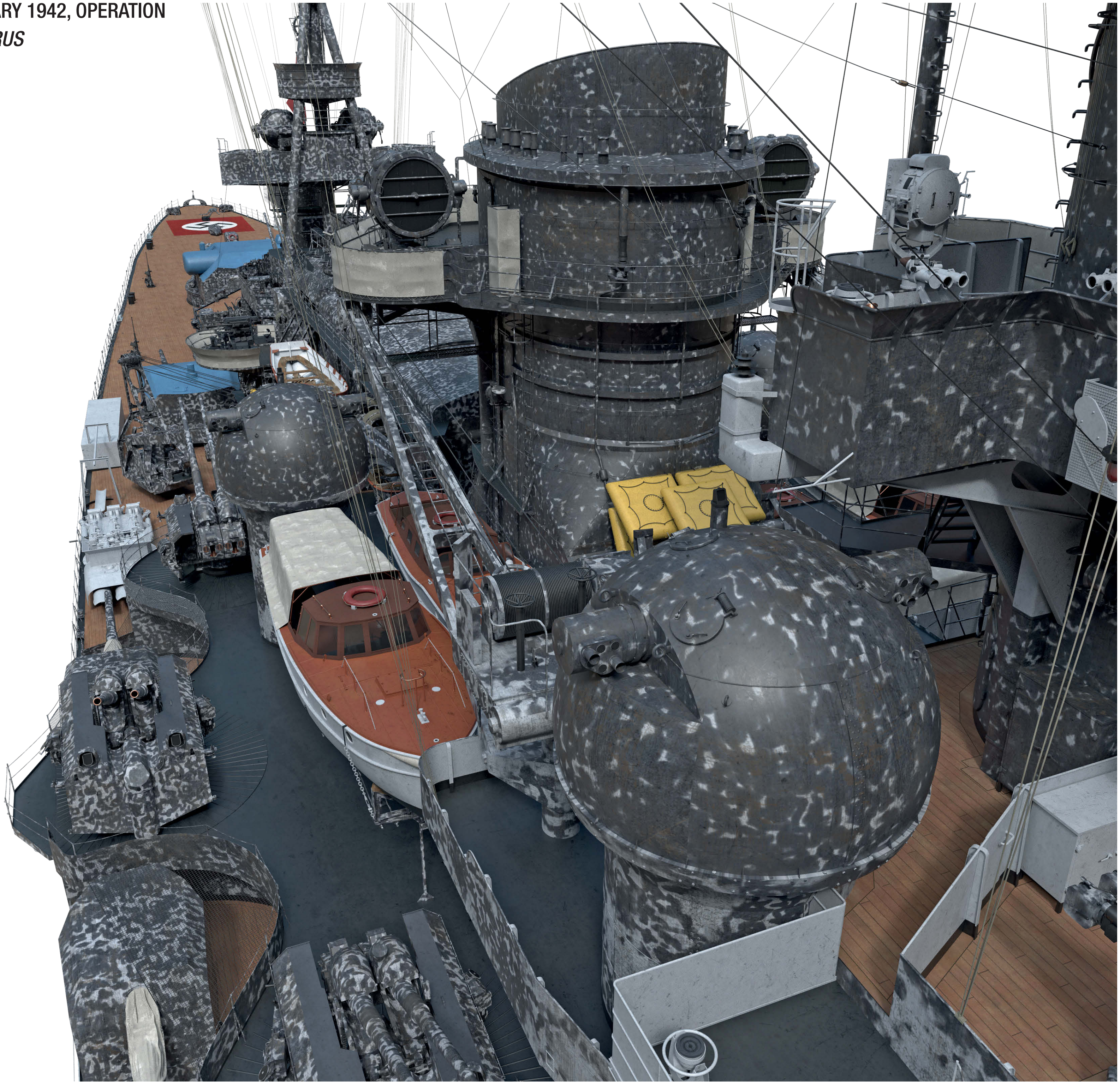

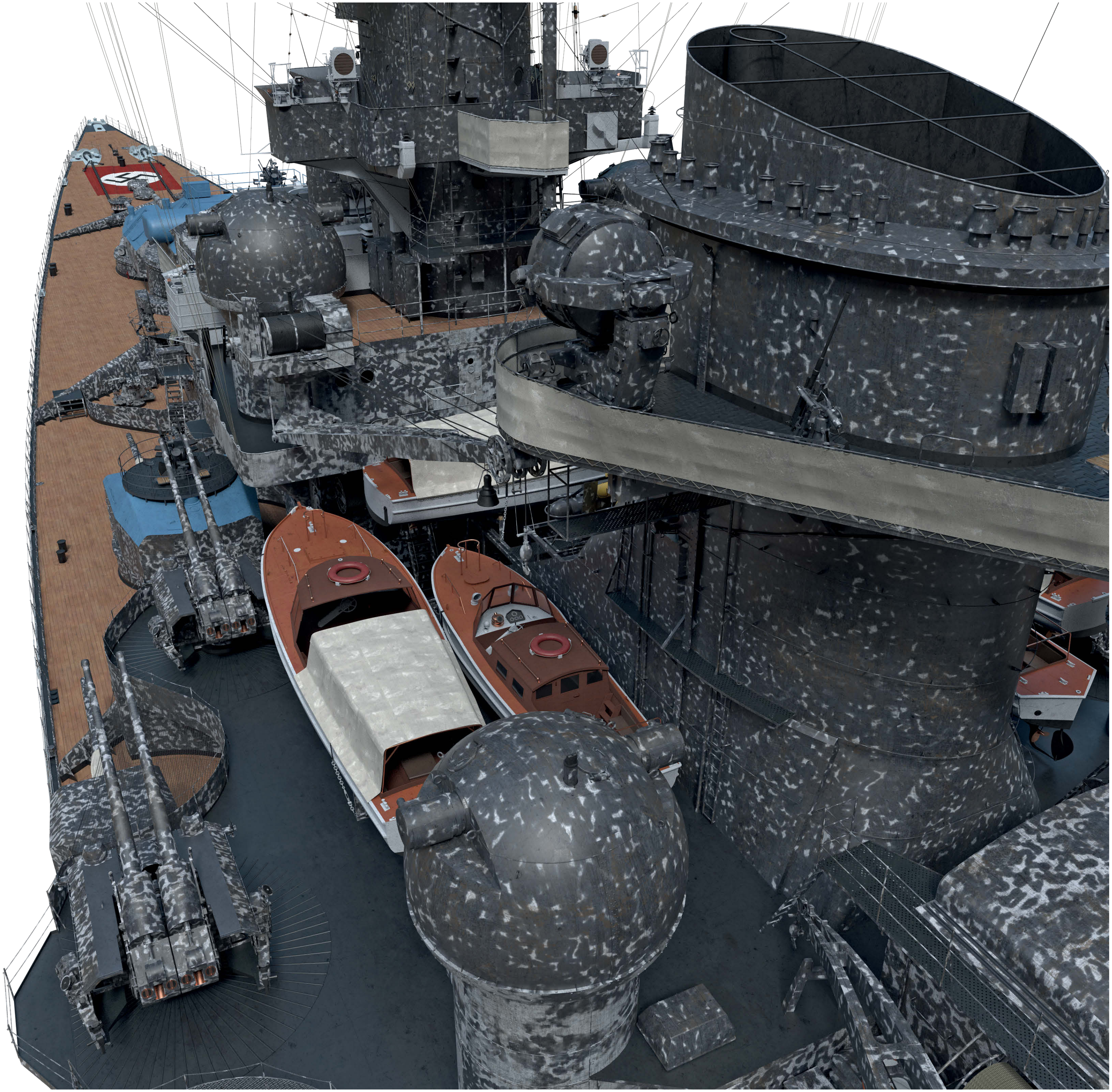

PRIMARY VIEWS

MARCH 1943, OPERATION *PADERBORN*. With exception of the white bow and stern, the battleship is painted dark grey. Turret tops are painted yellow.

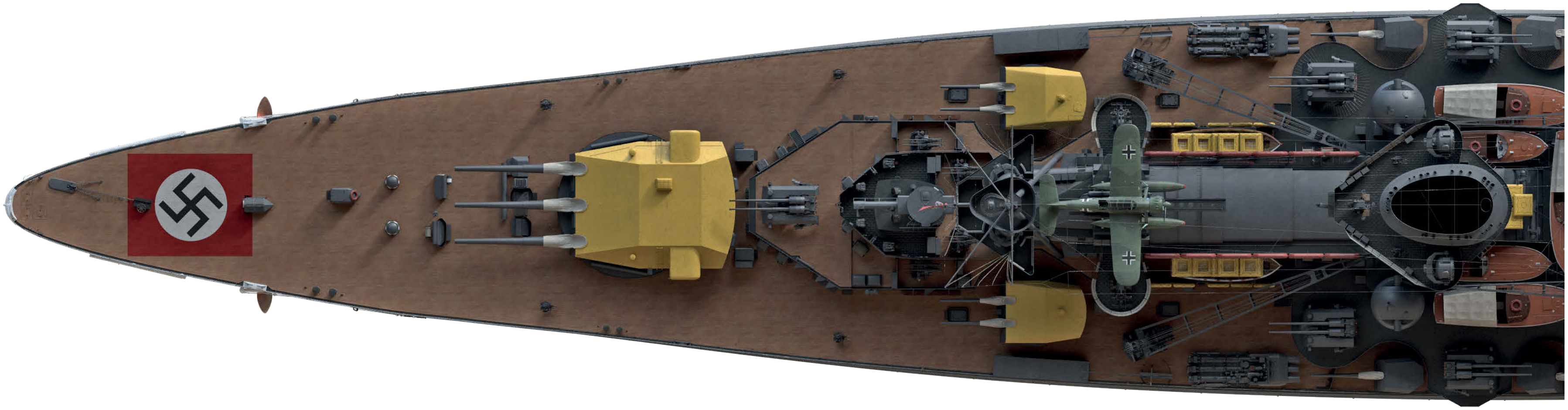

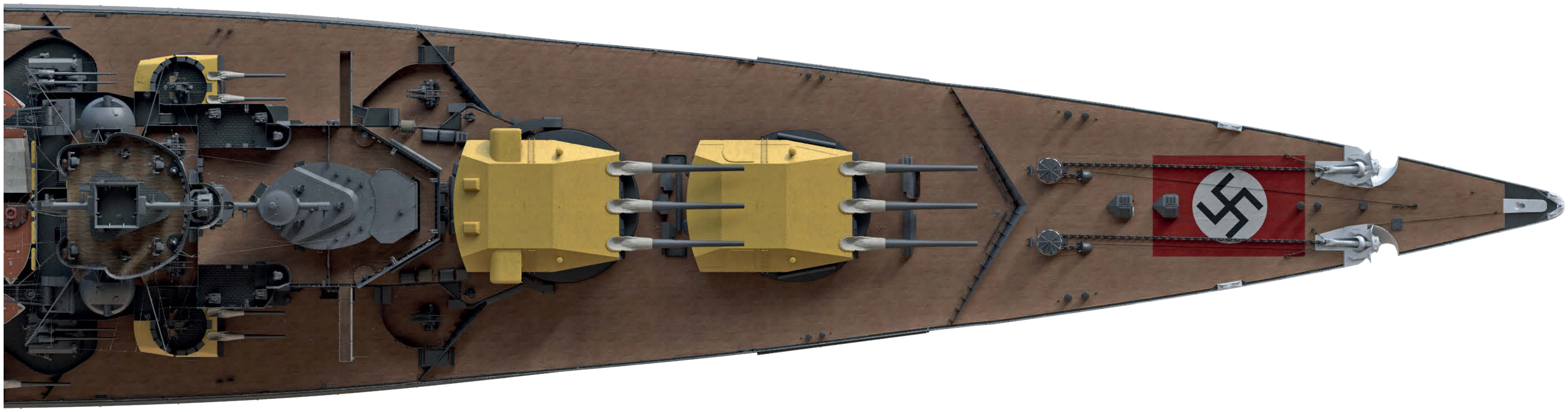

PRIMARY VIEWS

DECEMBER 1943, OPERATION *OSTFRONT*. A symmetrical camouflage scheme of black, white, and two tones of grey has been applied. Turret roofs are yellow.

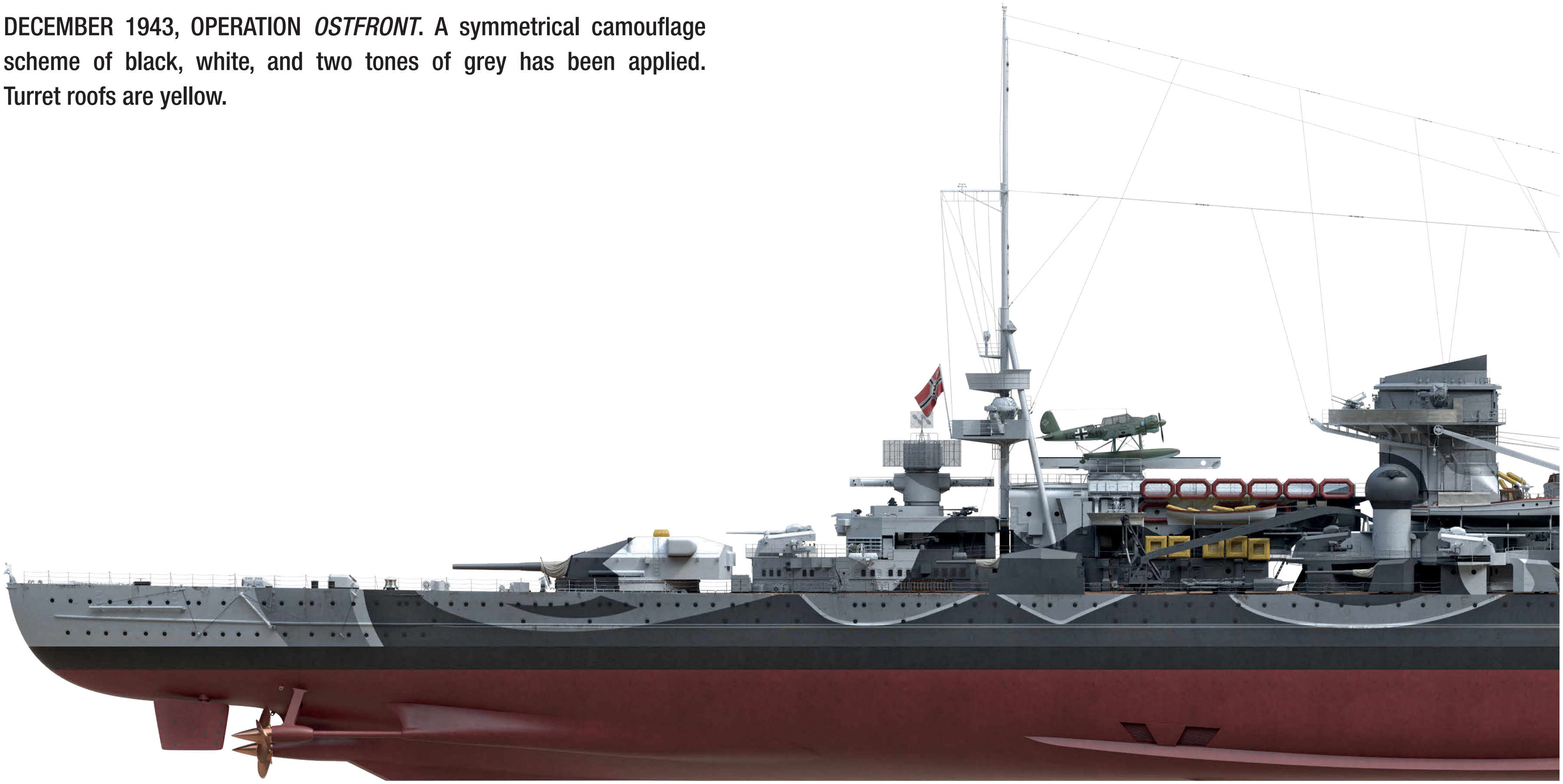

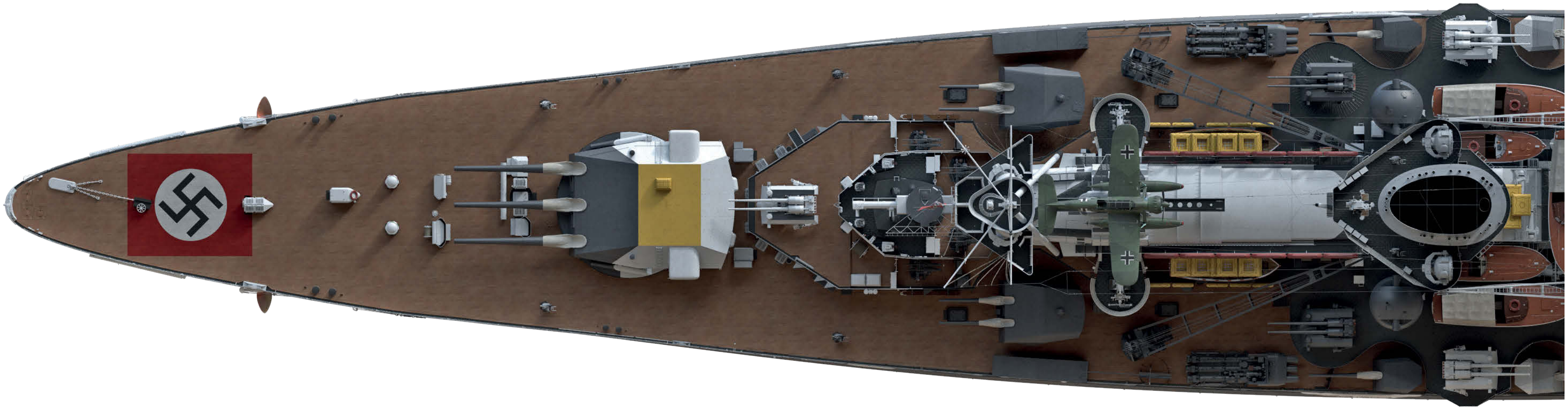

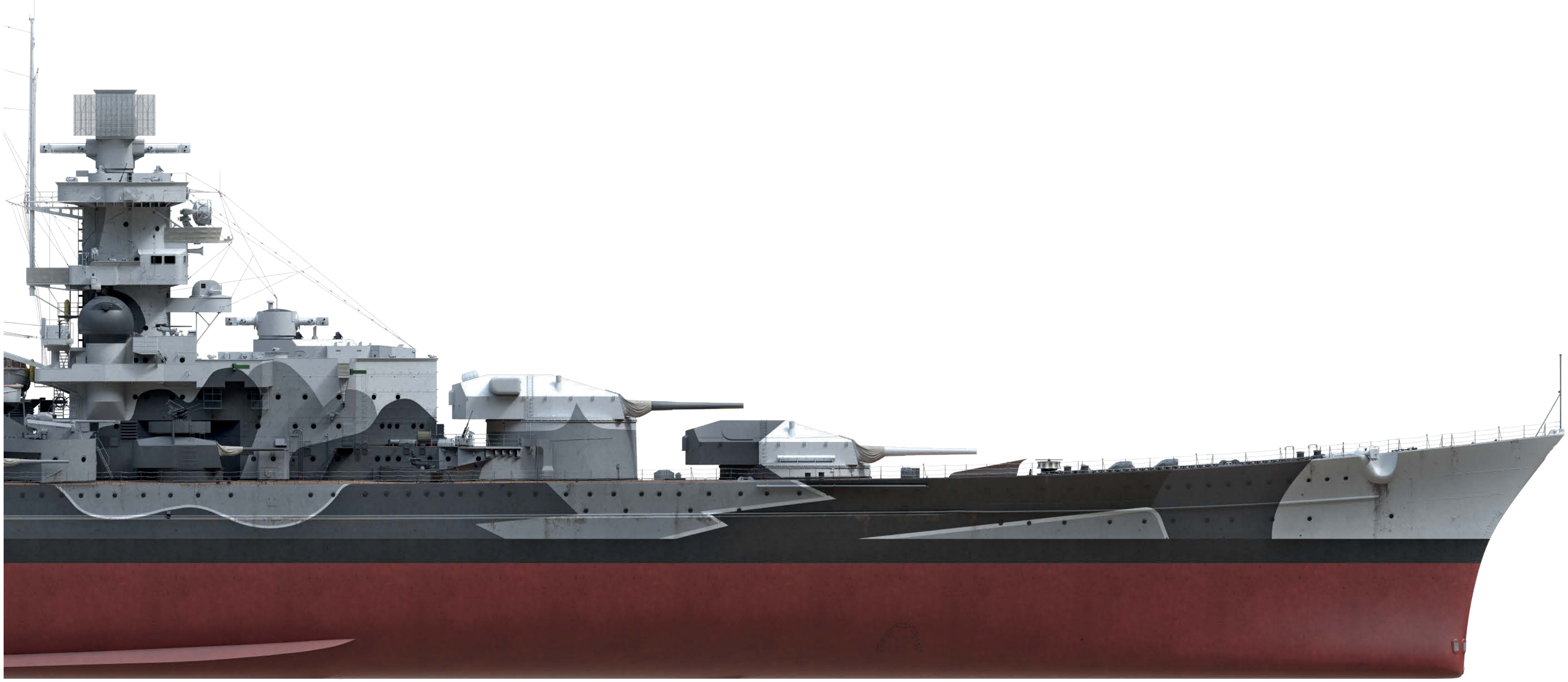

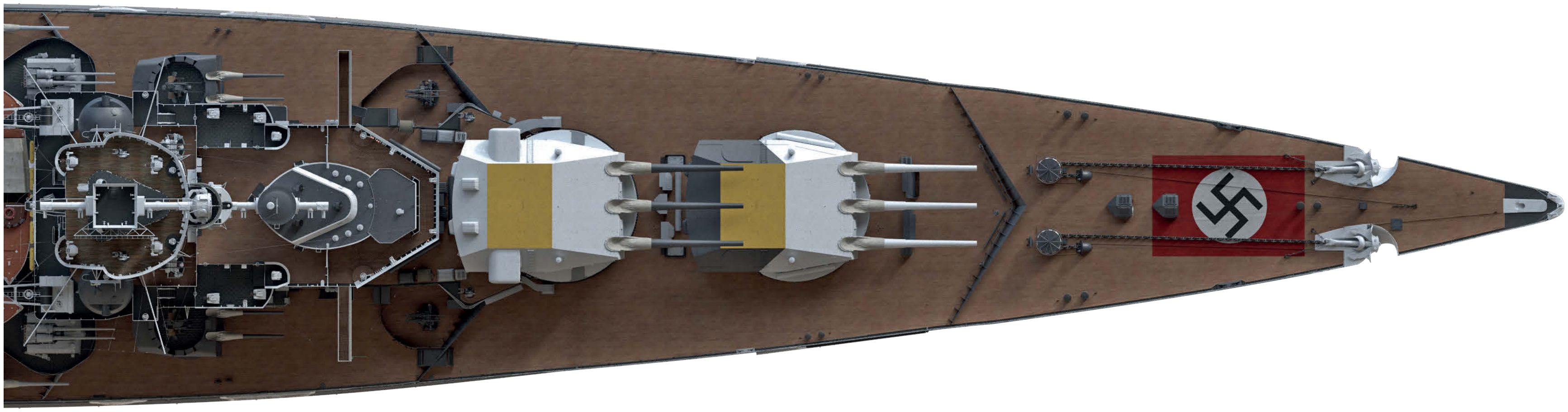

DECEMBER 1943, OPERATION *OSTFRONT*

JANUARY 1939, COMMISSIONING, WILHELMSHAVEN

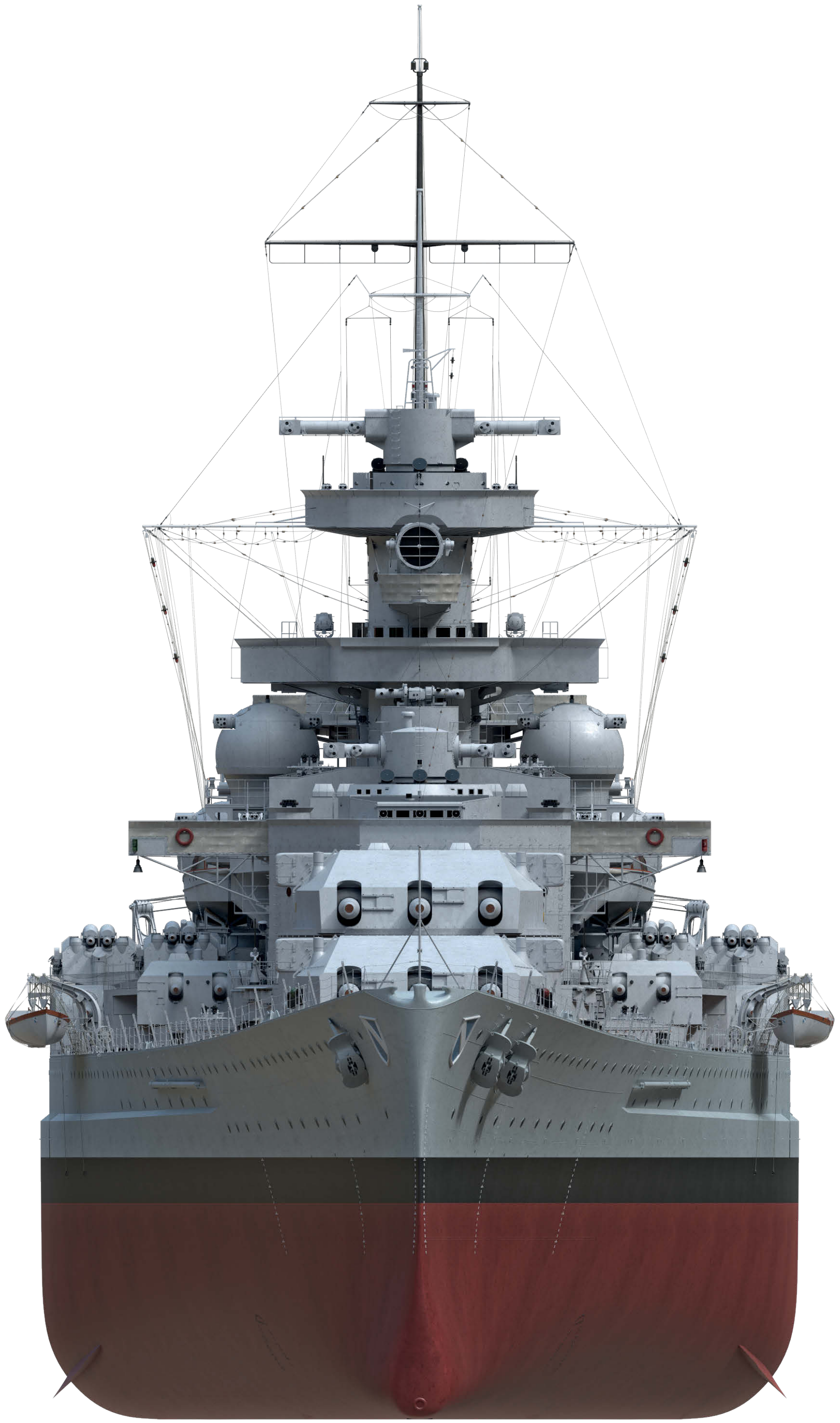

DECEMBER 1943, OPERATION *OSTFRONT*

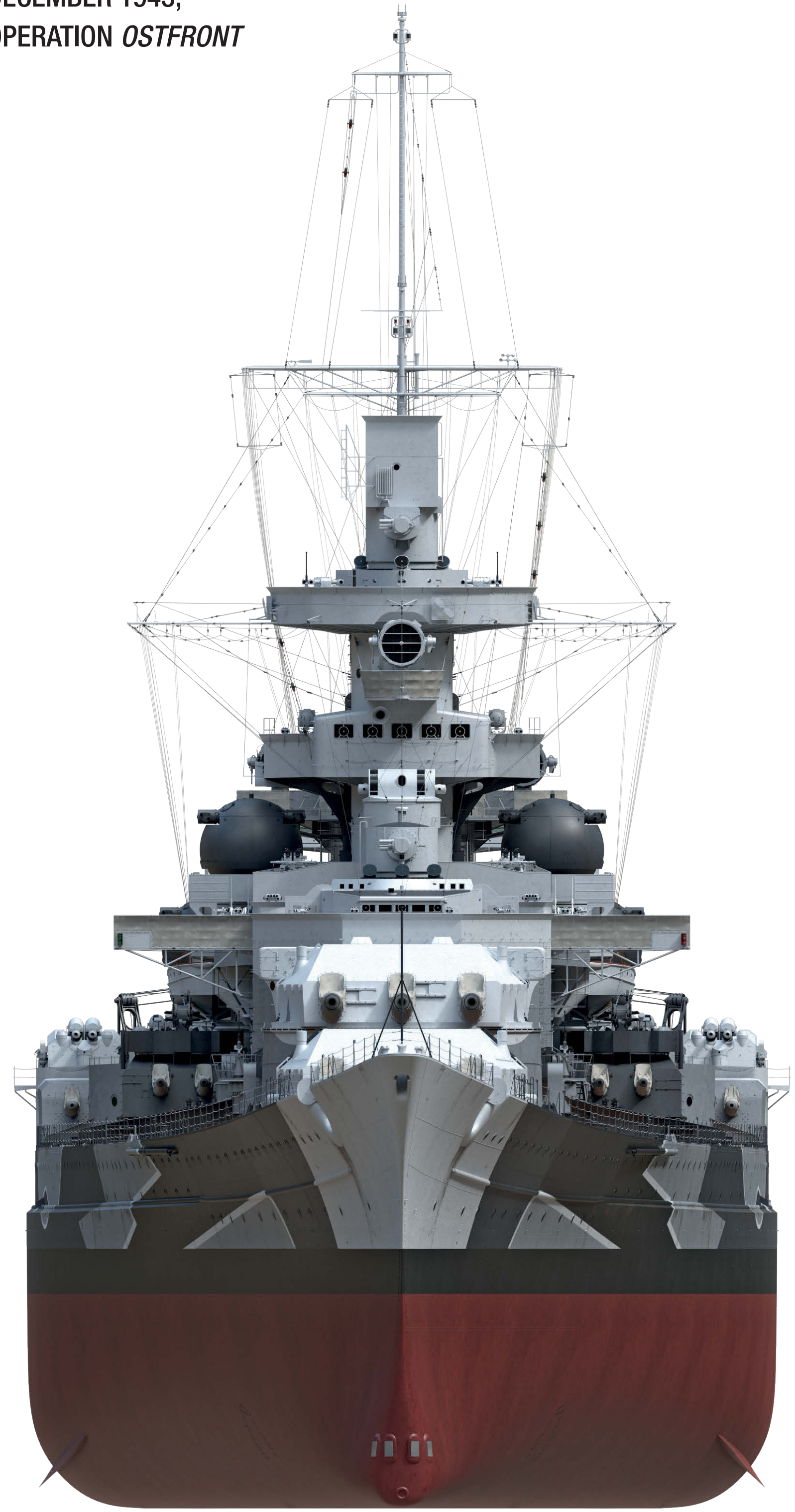

JANUARY 1939, COMMISSIONING, WILHELMSHAVEN

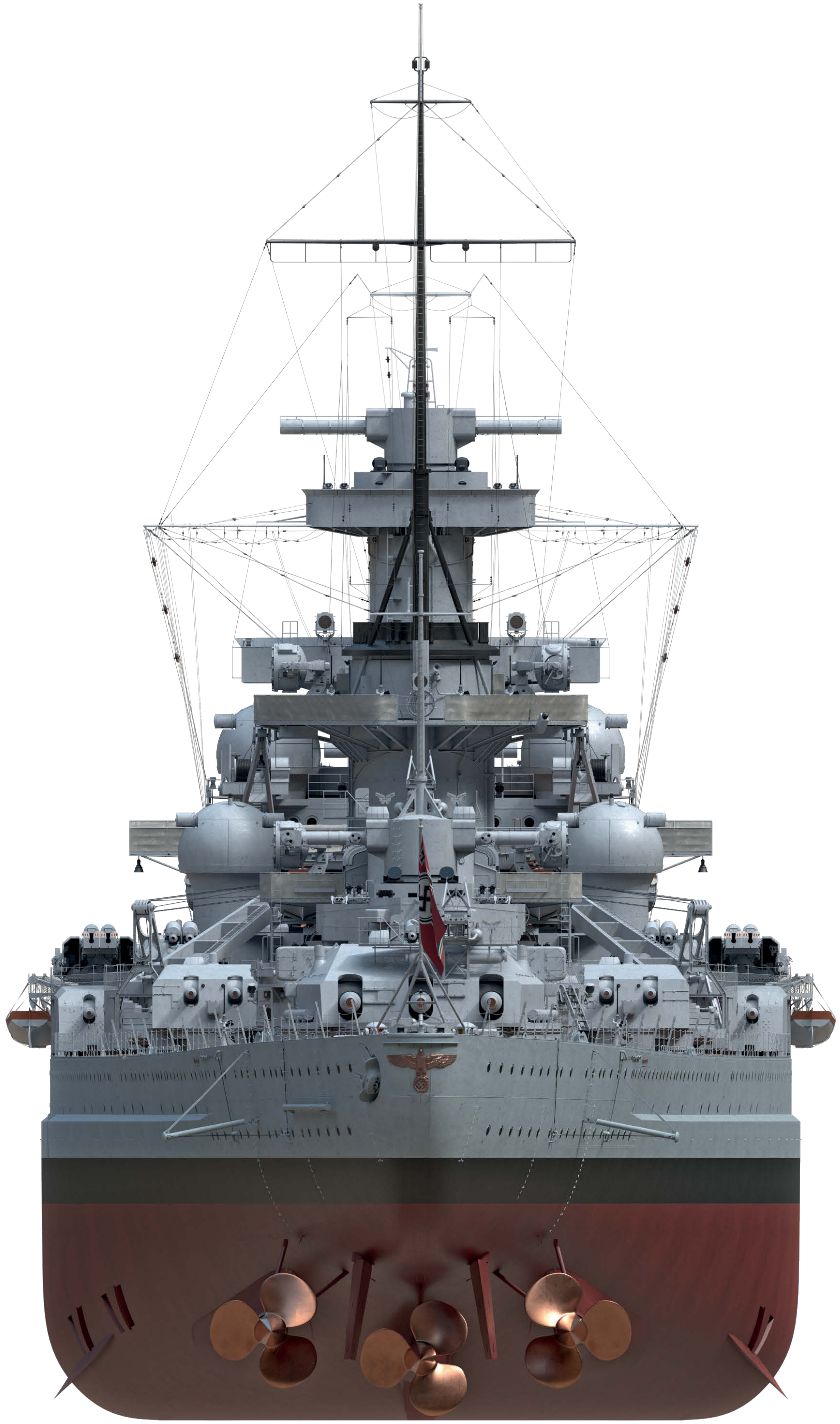

DECEMBER 1943, OPERATION *OSTFRONT*

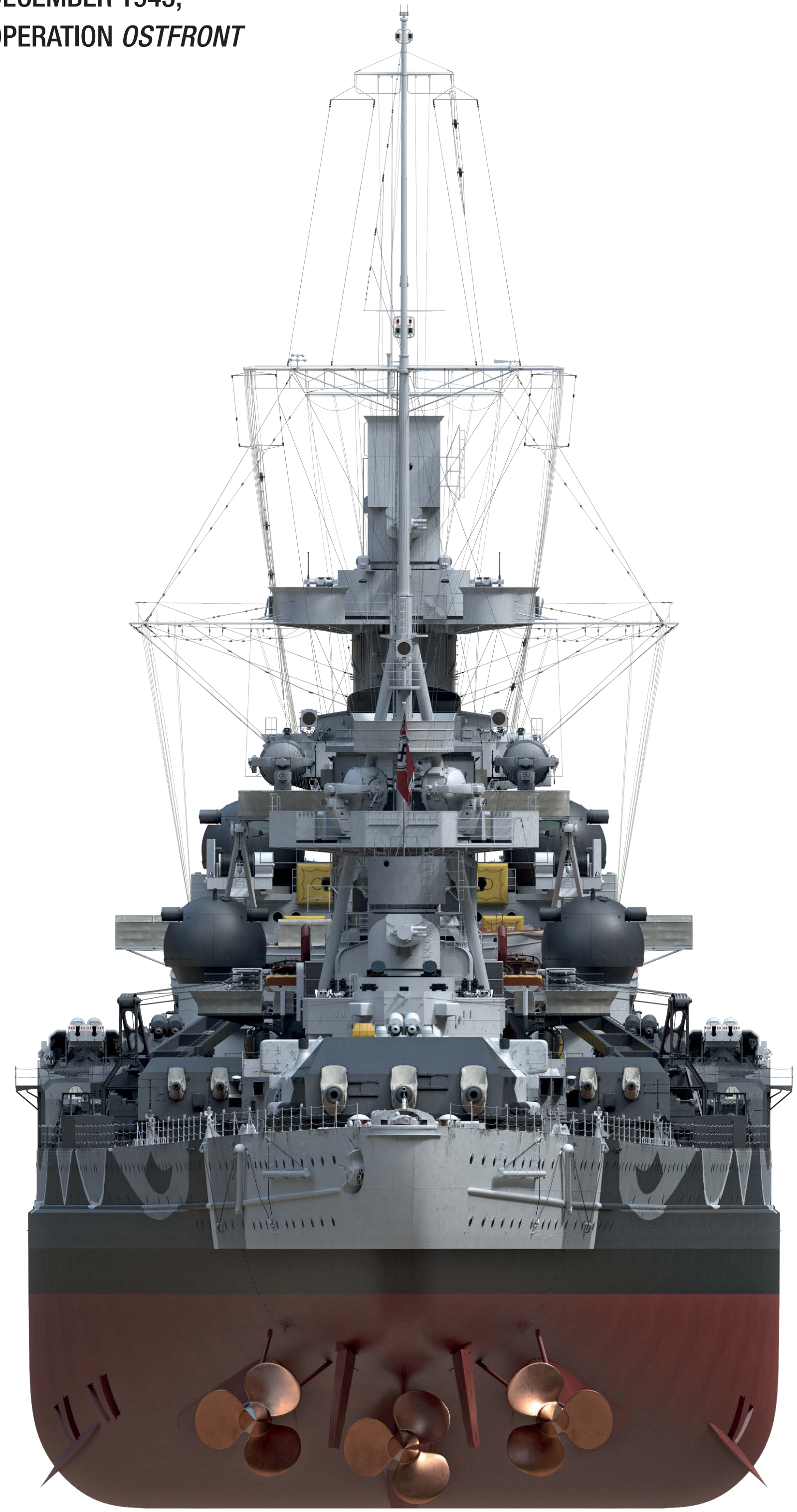

EXTERNAL VIEWS (1/500 SCALE)

A1/1 RIGHT PROFILE, JANUARY 1939

A1/2 PLAN, JANUARY 1939

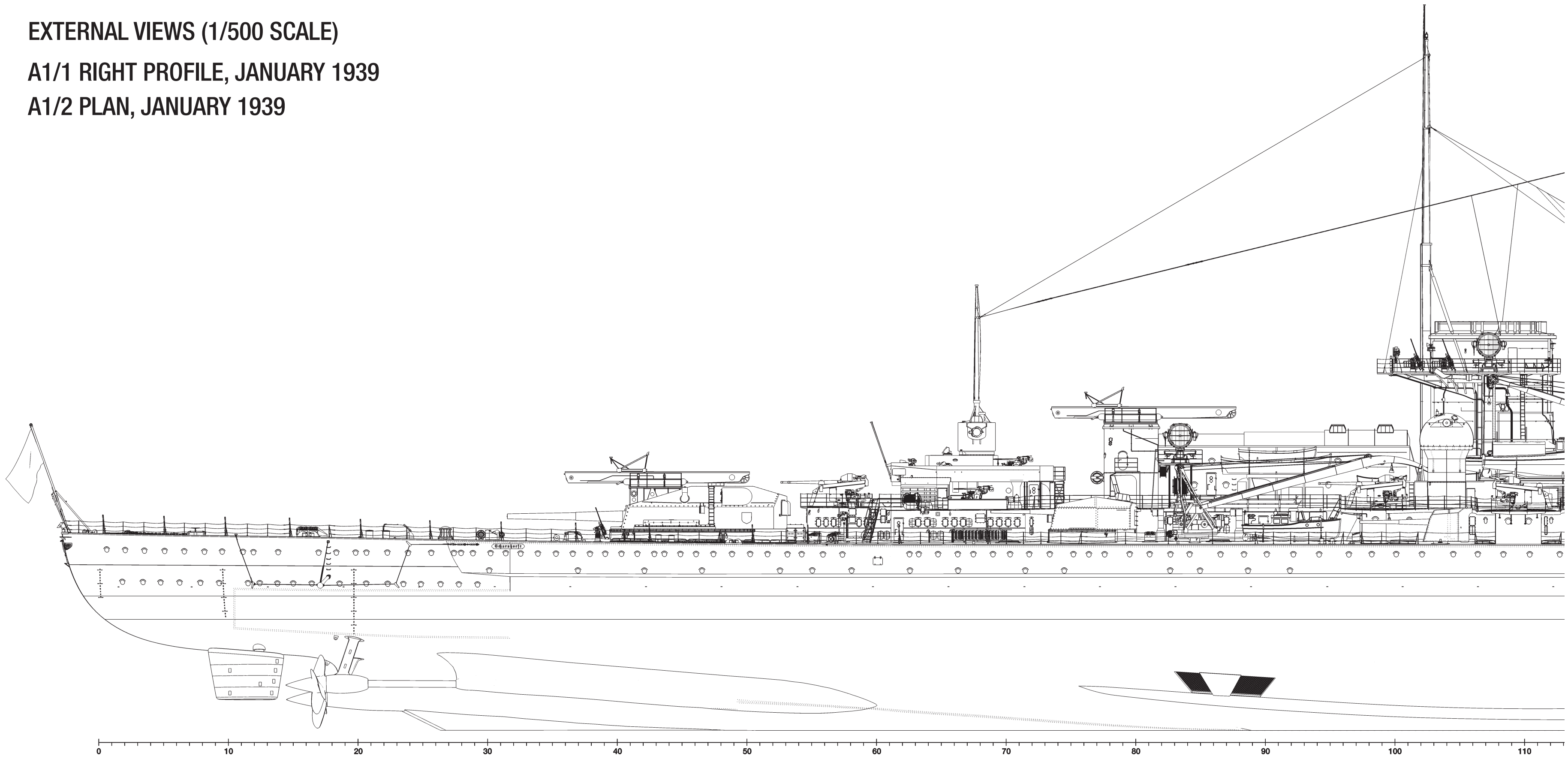

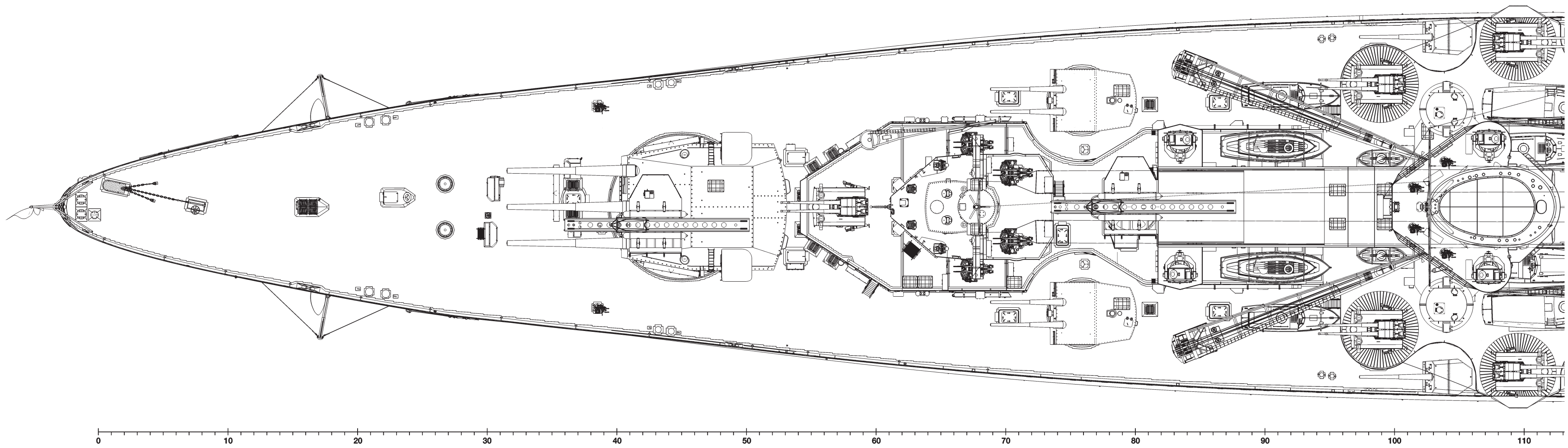

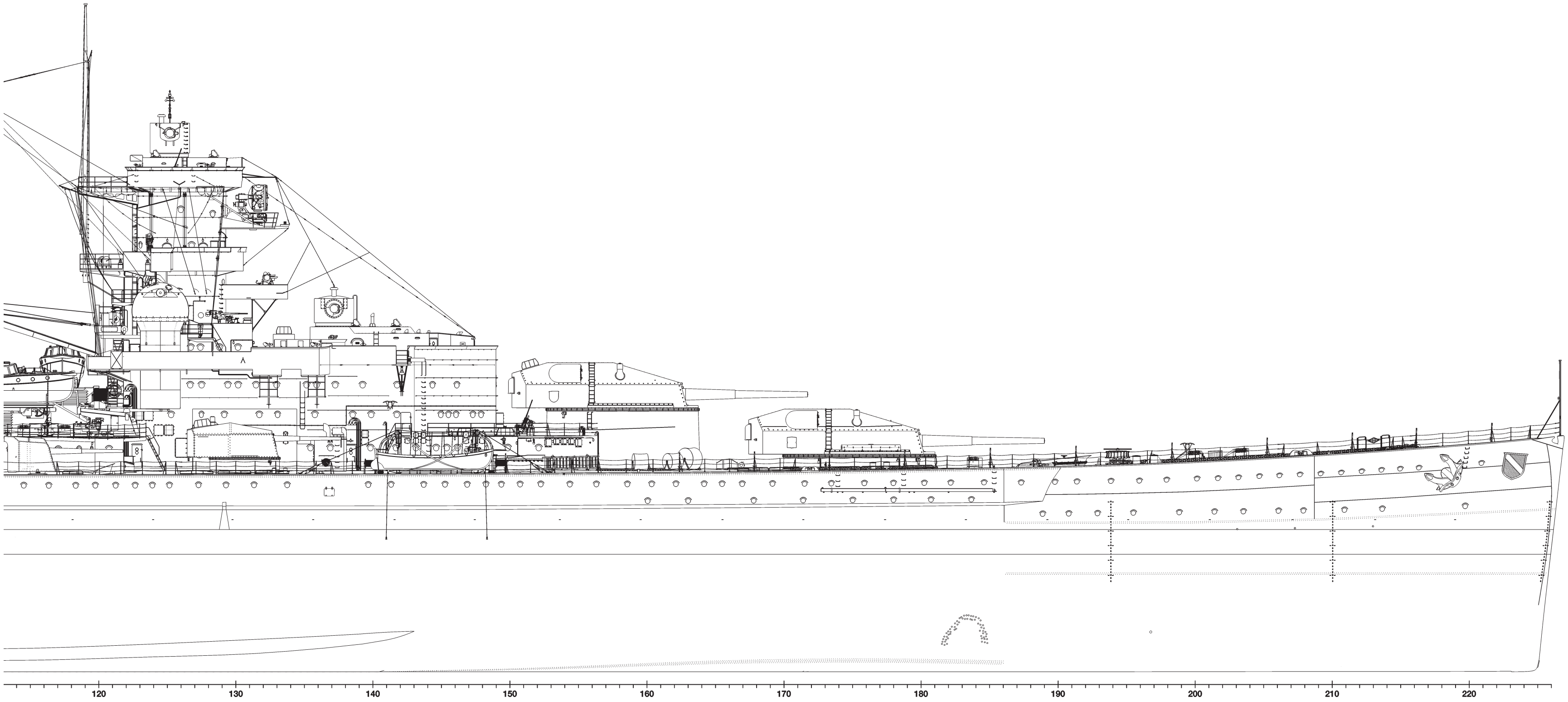
120
130
140
150
160
170
180
190
200
210
220

A1/1

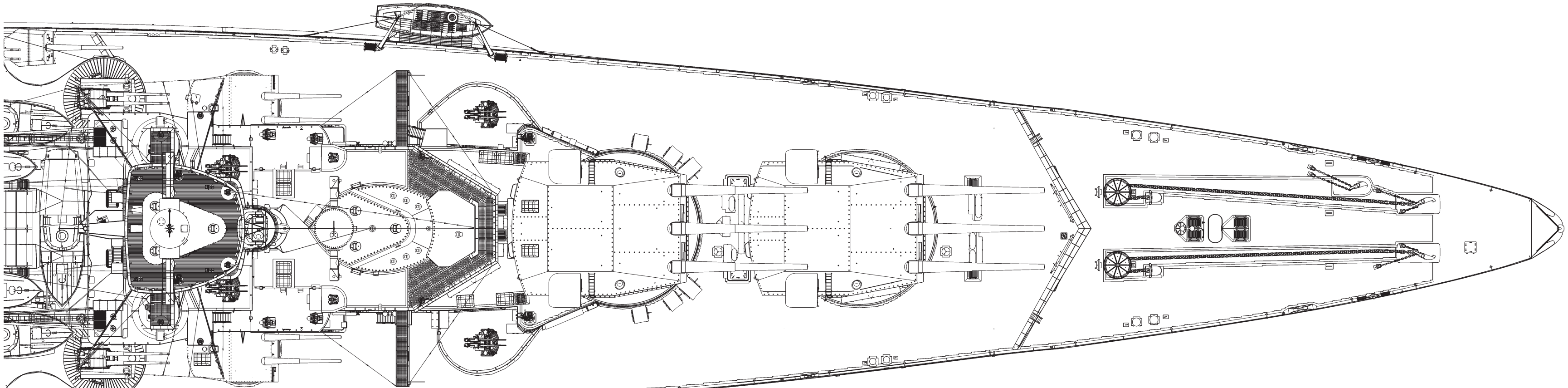
120
130
140
150
160
170
180
190
200
210
220

A1/2

EXTERNAL VIEWS (1/500 SCALE)

A1/3 LEFT PROFILE, JANUARY 1939

A1/4 RIGHT PROFILE, AUGUST 1939

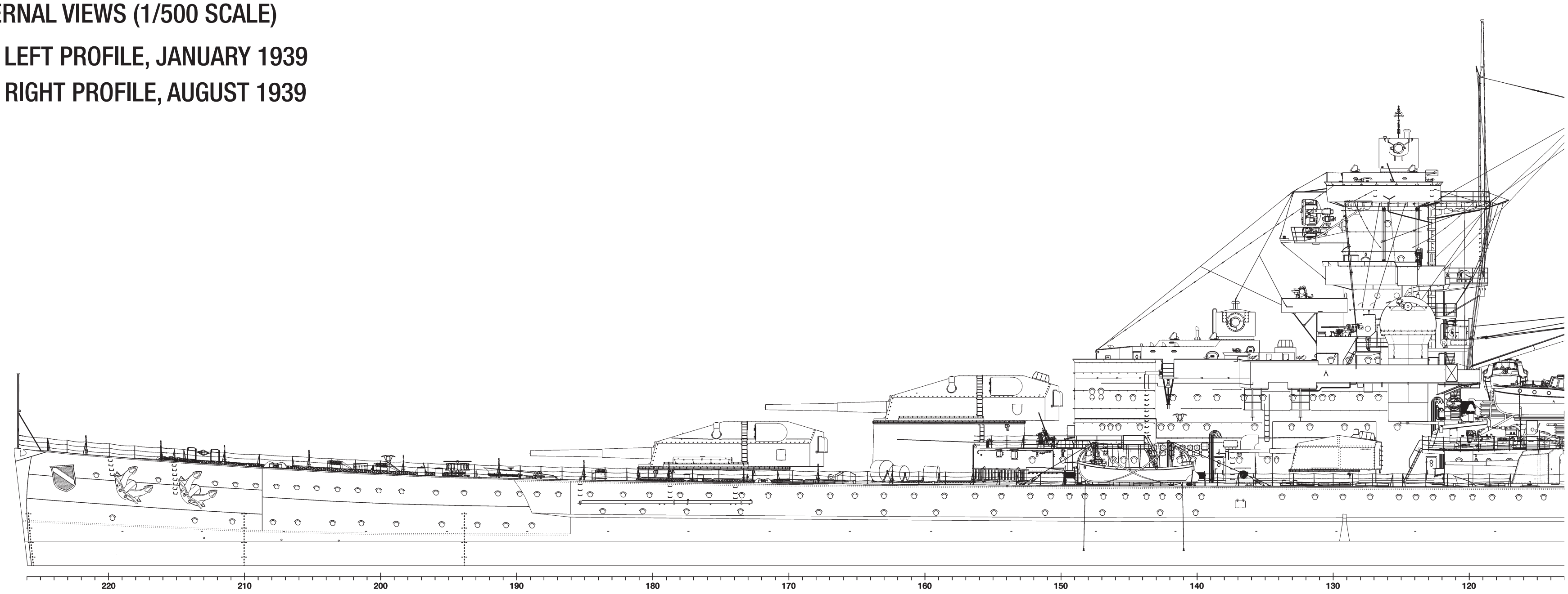

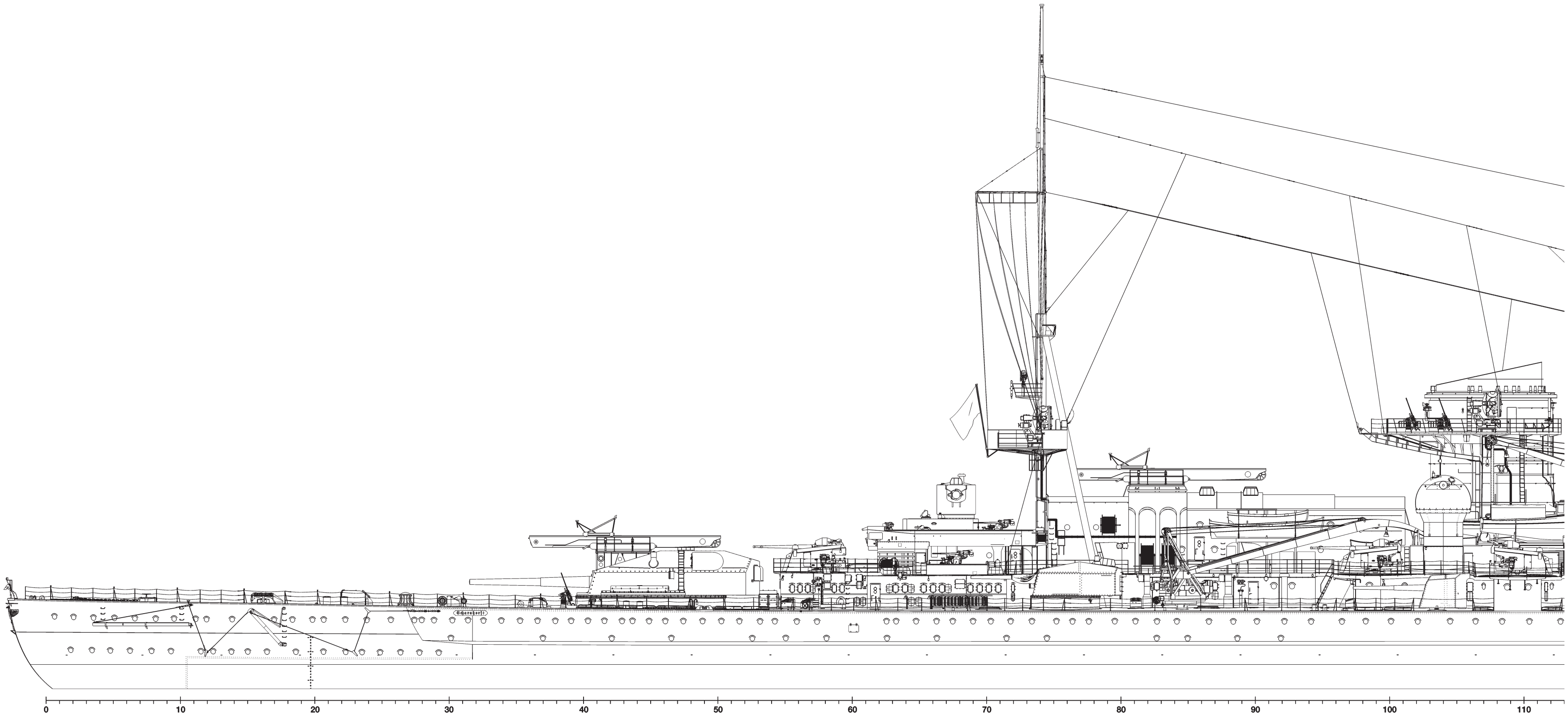

A1/3

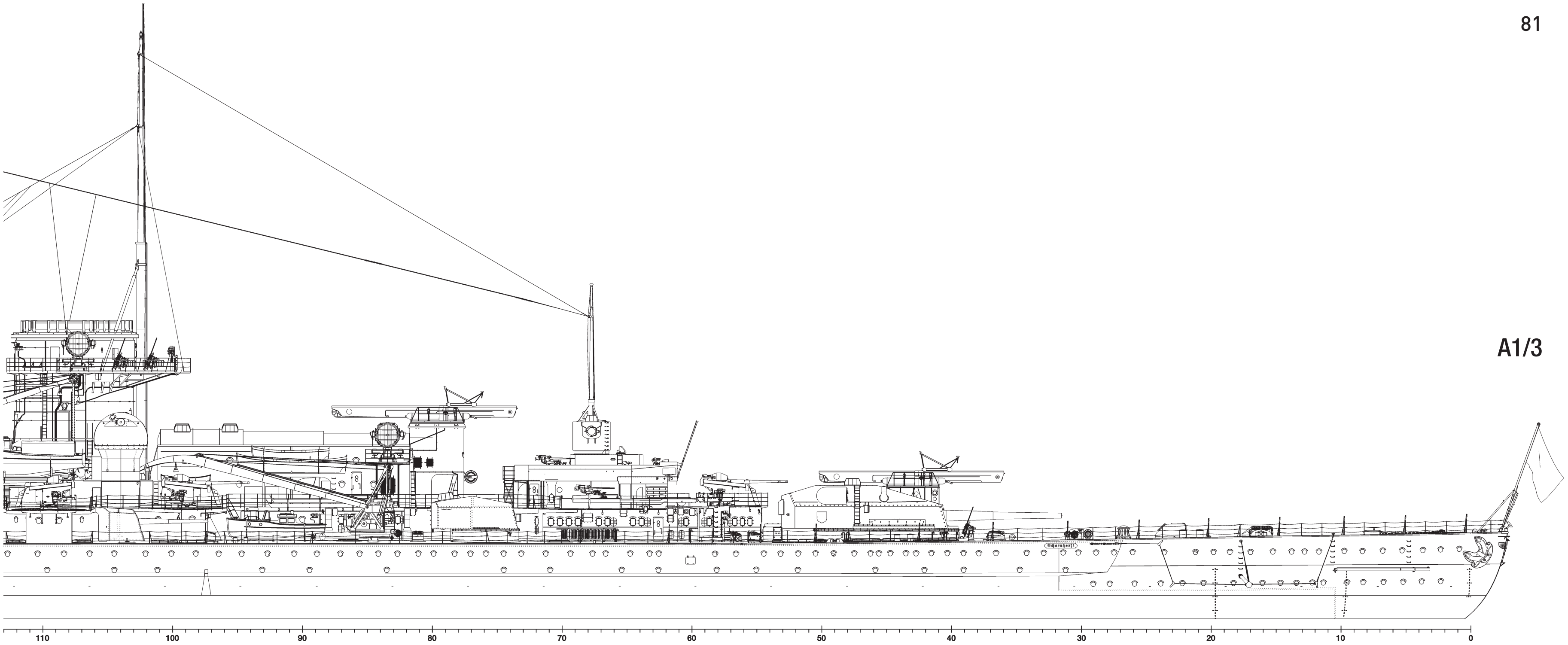
110
100
90
80
70
60
50
40
30
20
10
0

A1/4

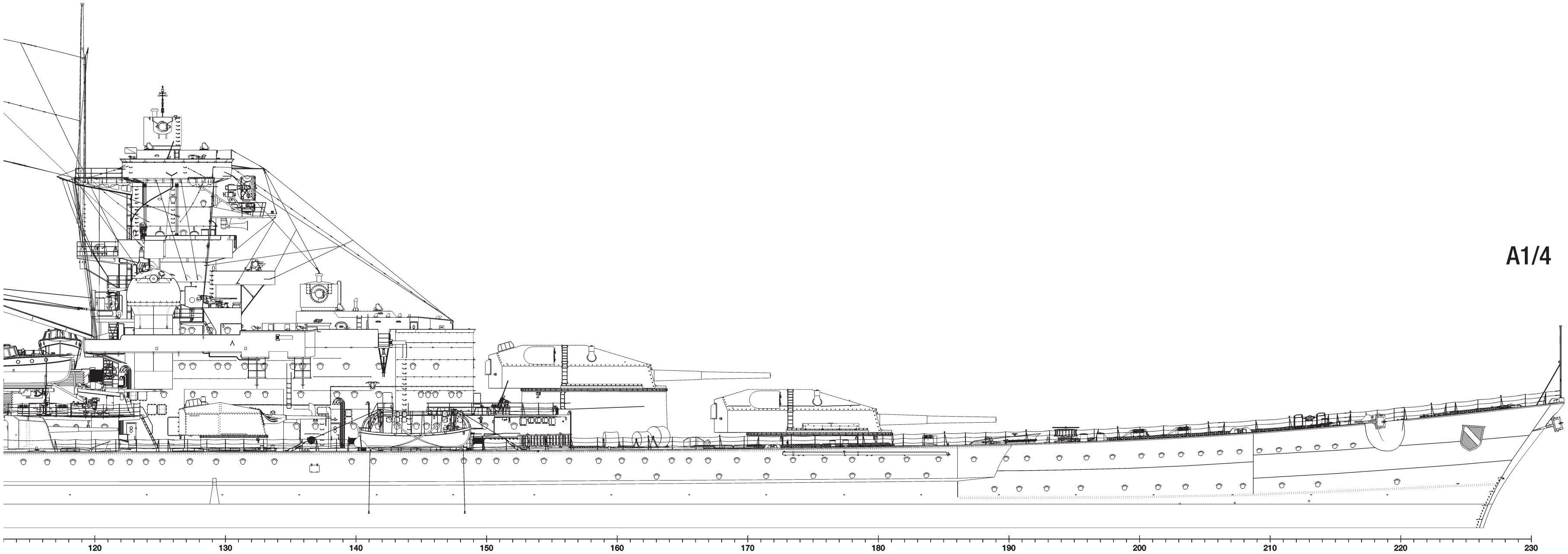
120
130
140
150
160
170
180
190
200
210
220
230

EXTERNAL VIEWS (1/500 SCALE)

A1/5 RIGHT PROFILE, JUNE 1940

A1/6 PLAN, JUNE 1940

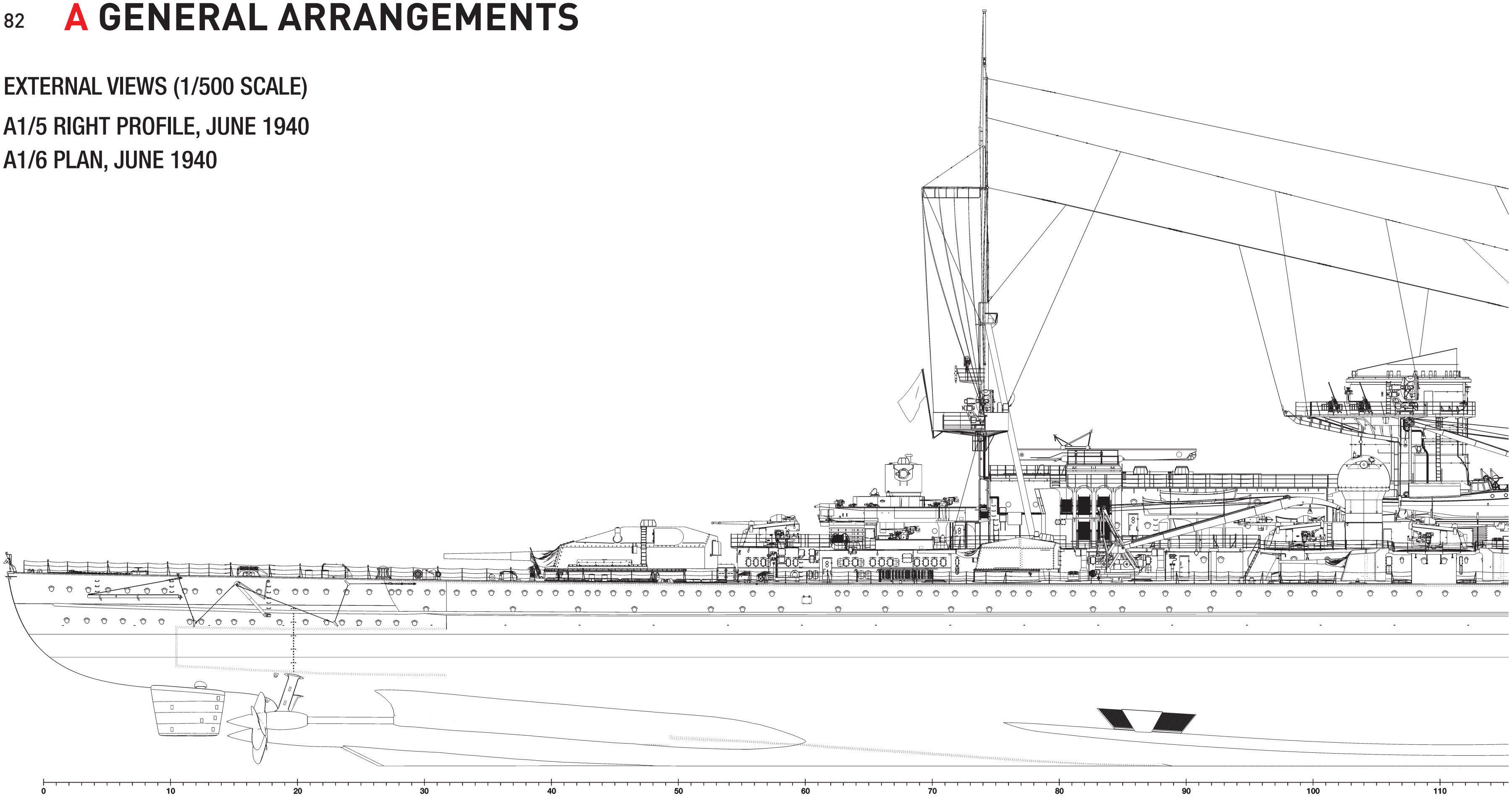

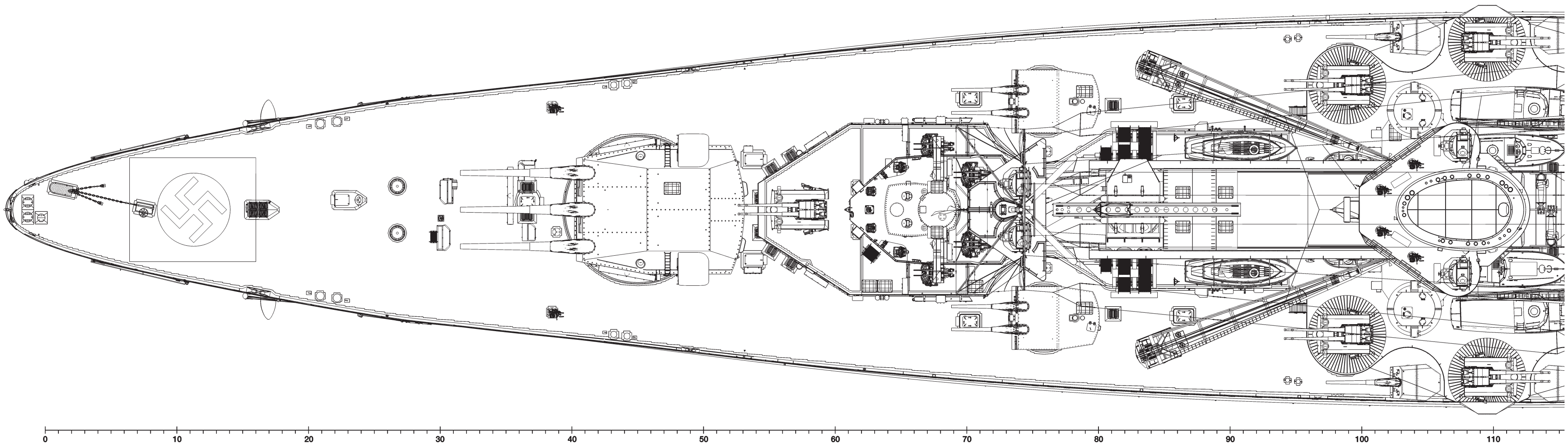

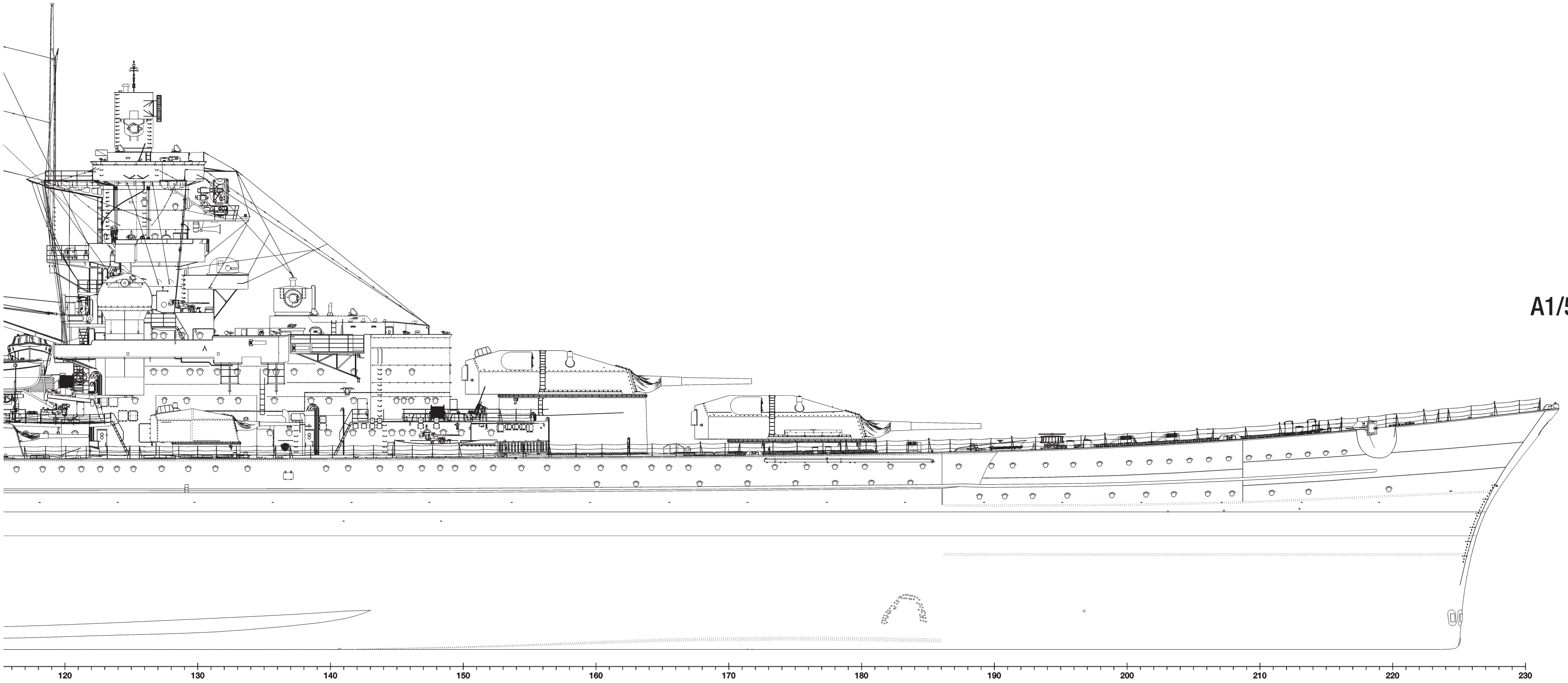
120
130
140
150
160
170
180
190
200
210
220
230

A1/5

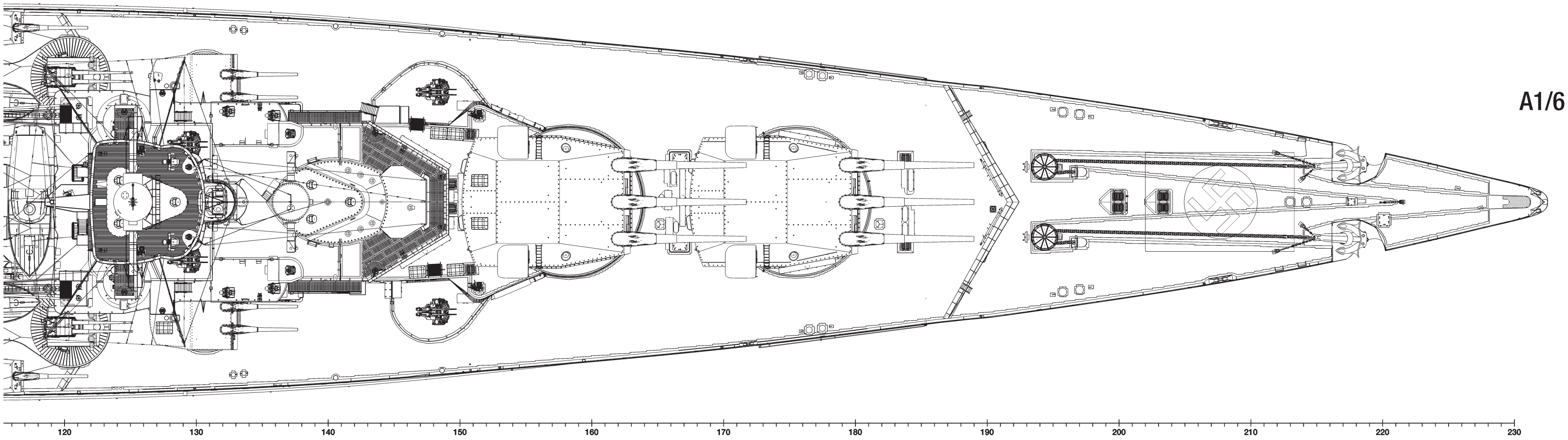
120
130
140
150
160
170
180
190
200
210
220
230

A1/6

A GENERAL ARRANGEMENTS

EXTERNAL VIEWS (1/500 SCALE)

A1/7 RIGHT PROFILE, MARCH 1941

A1/8 PLAN, MARCH 1941

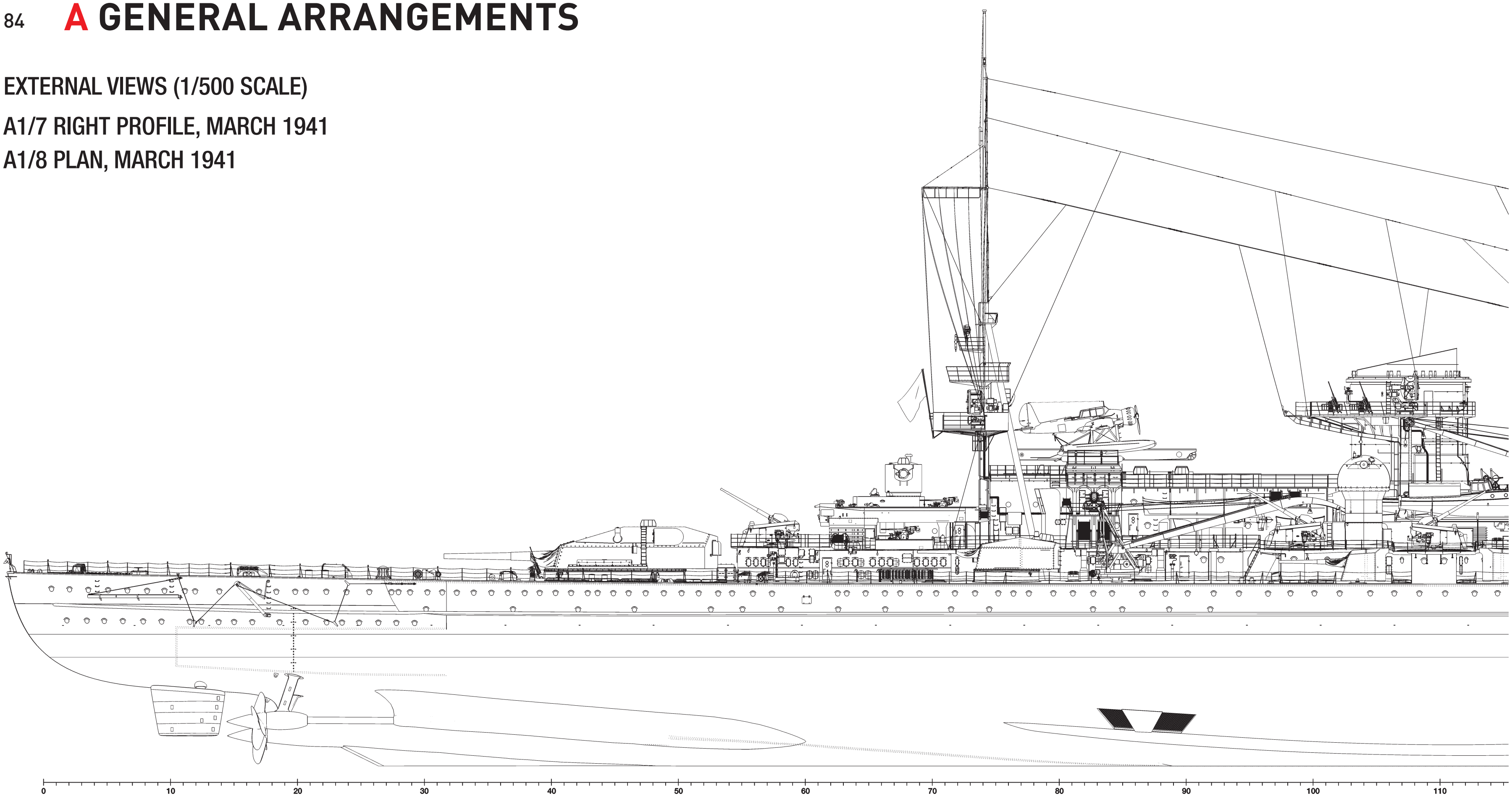

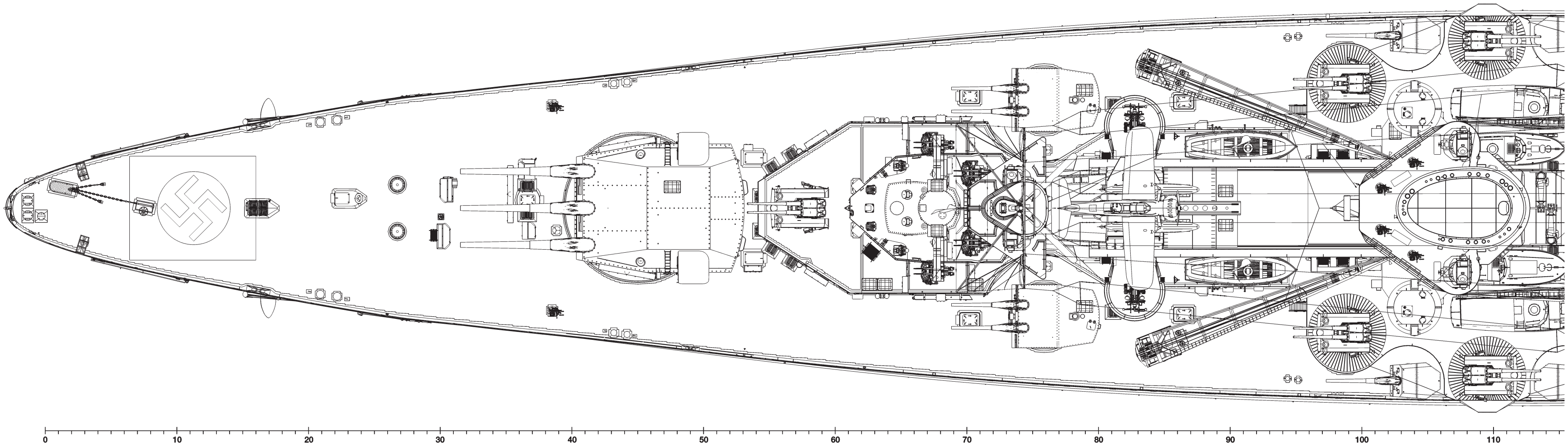

A1/7

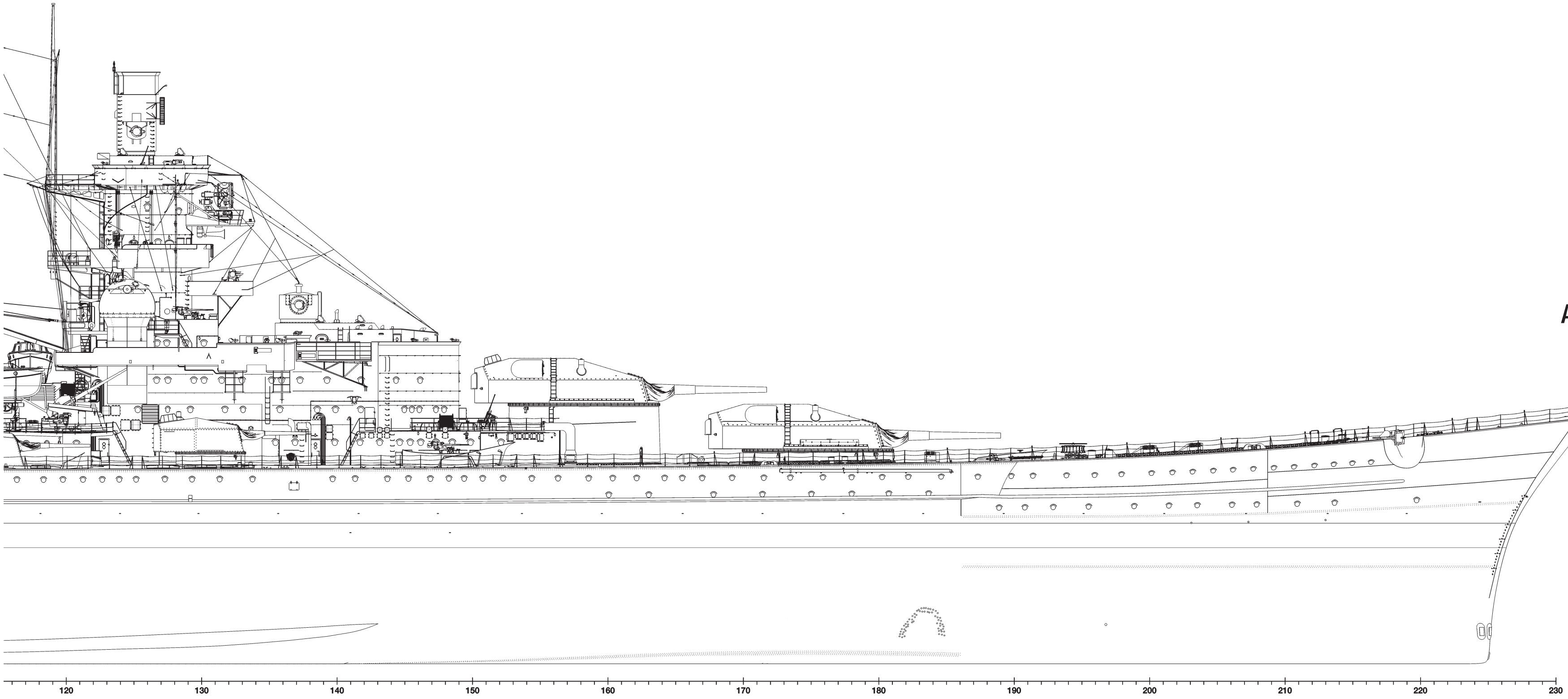
120
130
140
150
160
170
180
190
200
210
220
230

A1/8

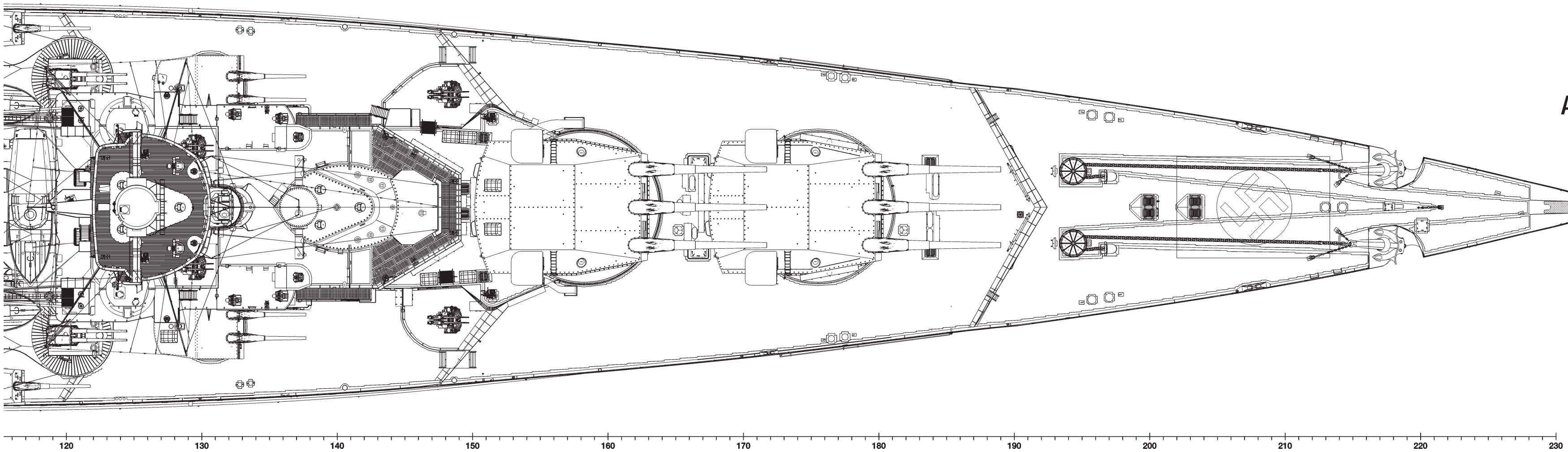
120
130
140
150
160
170
180
190
200
210
220
230

EXTERNAL VIEWS (1/500 SCALE)

A1/9 RIGHT PROFILE, FEBRUARY 1942

A1/10 LEFT PROFILE, DECEMBER 1943

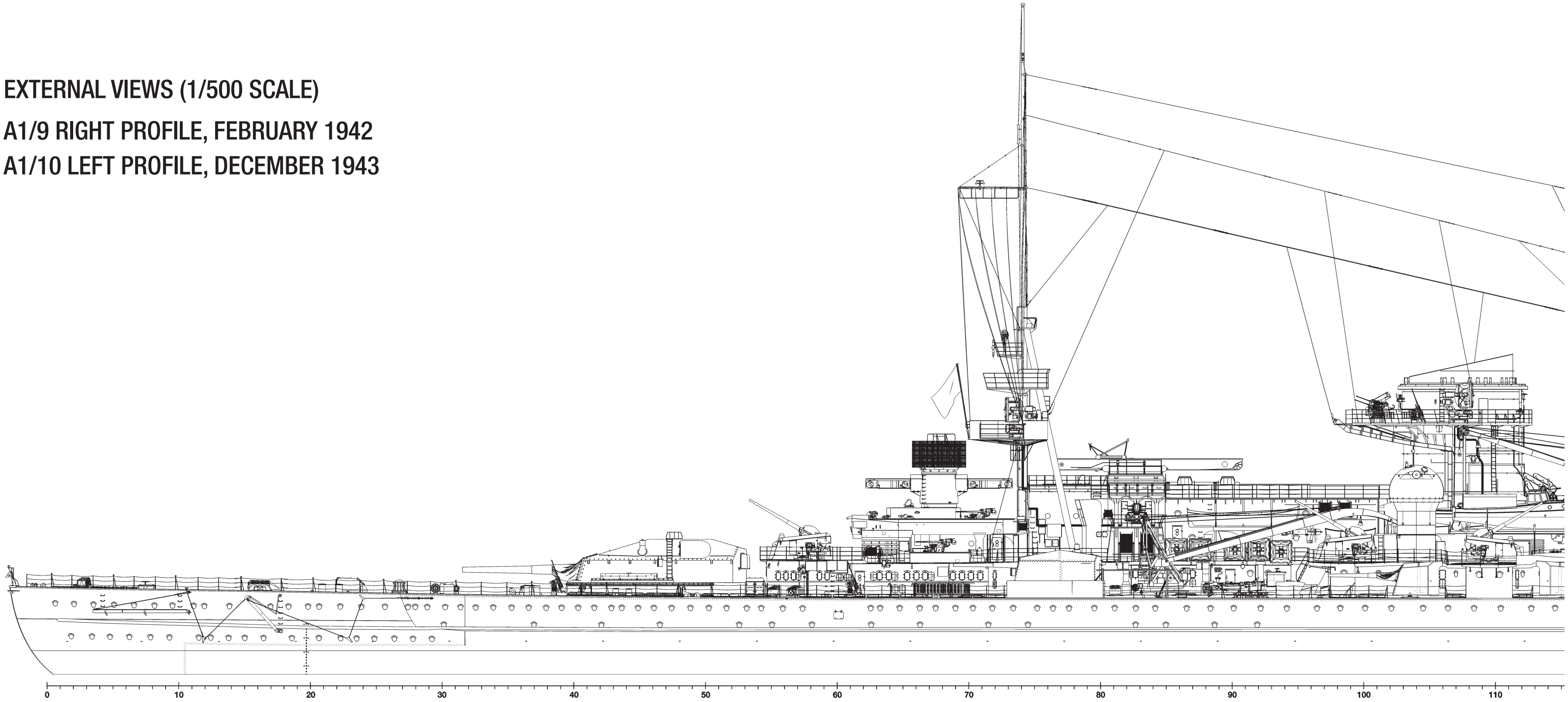

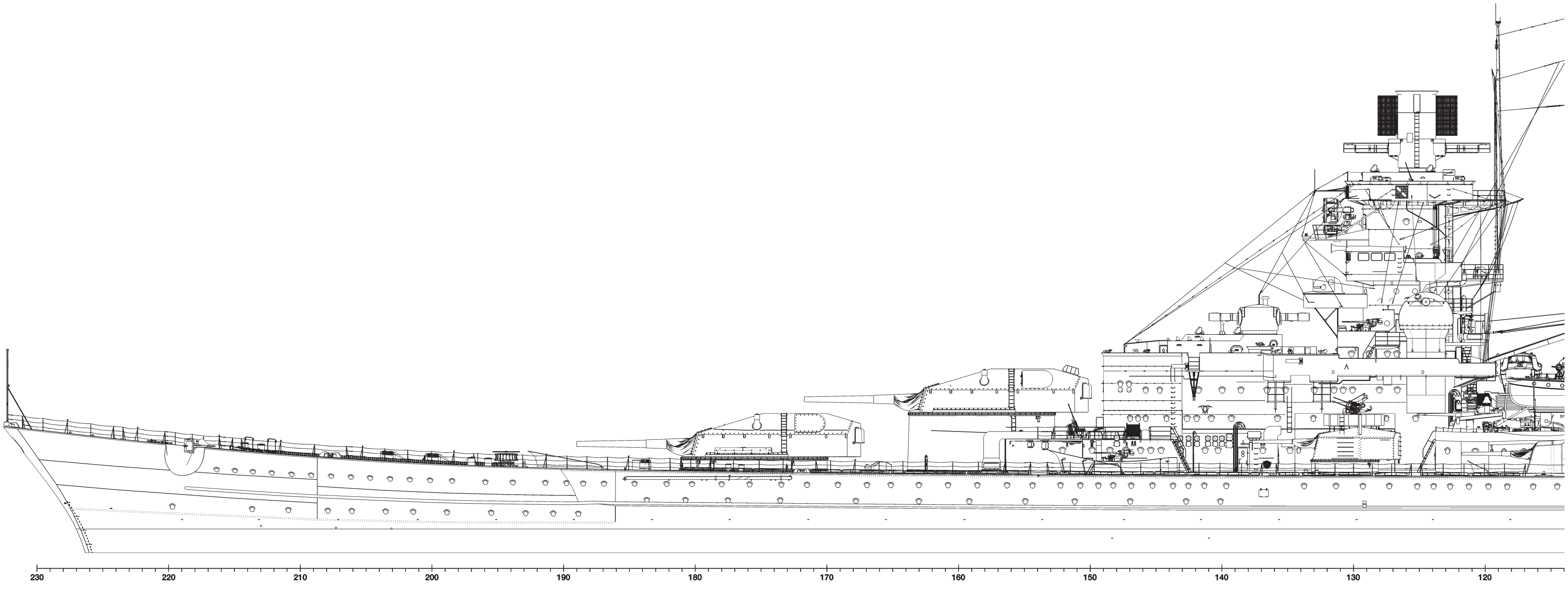

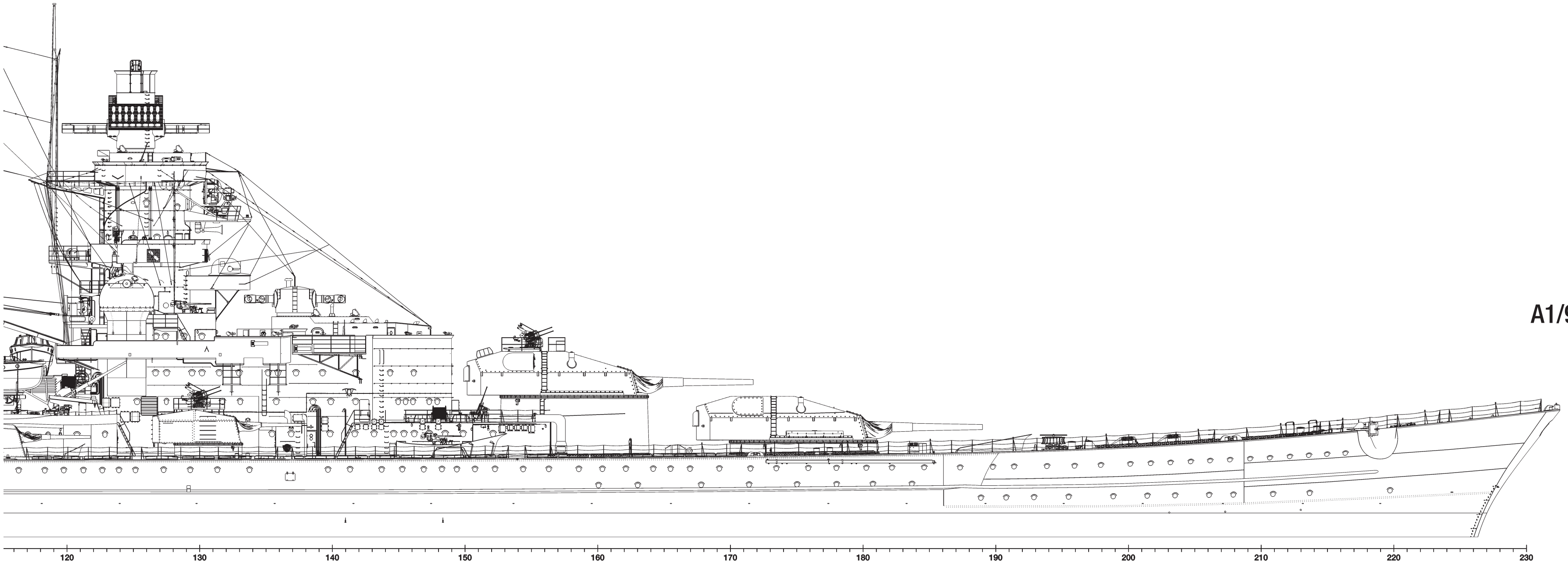
120 130 140 150 160 170 180 190 200 210 220 230

A1/9

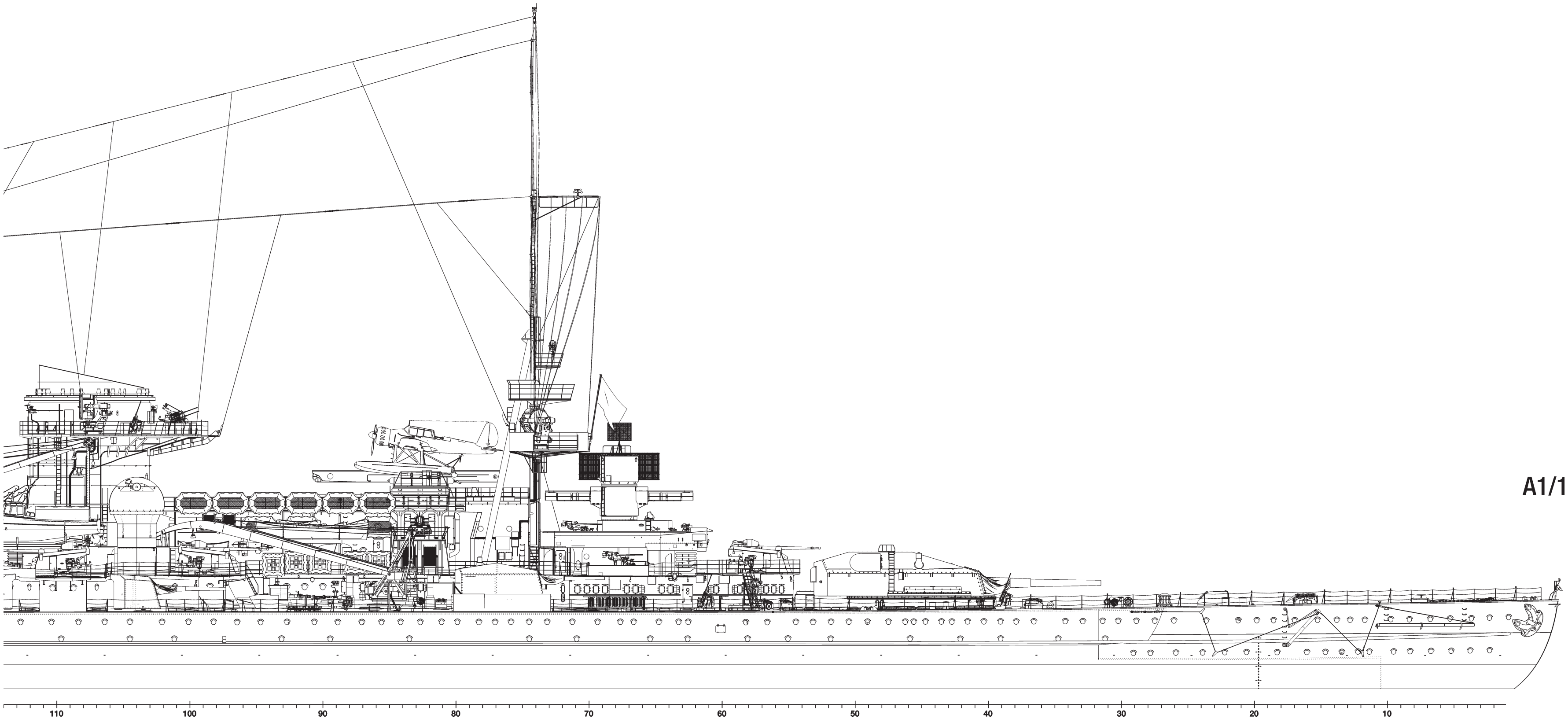
110 100 90 80 70 60 50 40 30 20 10

A1/10

EXTERNAL VIEWS (1/500 SCALE)

A1/11 RIGHT PROFILE, DECEMBER 1943

A1/12 PLAN, DECEMBER 1943

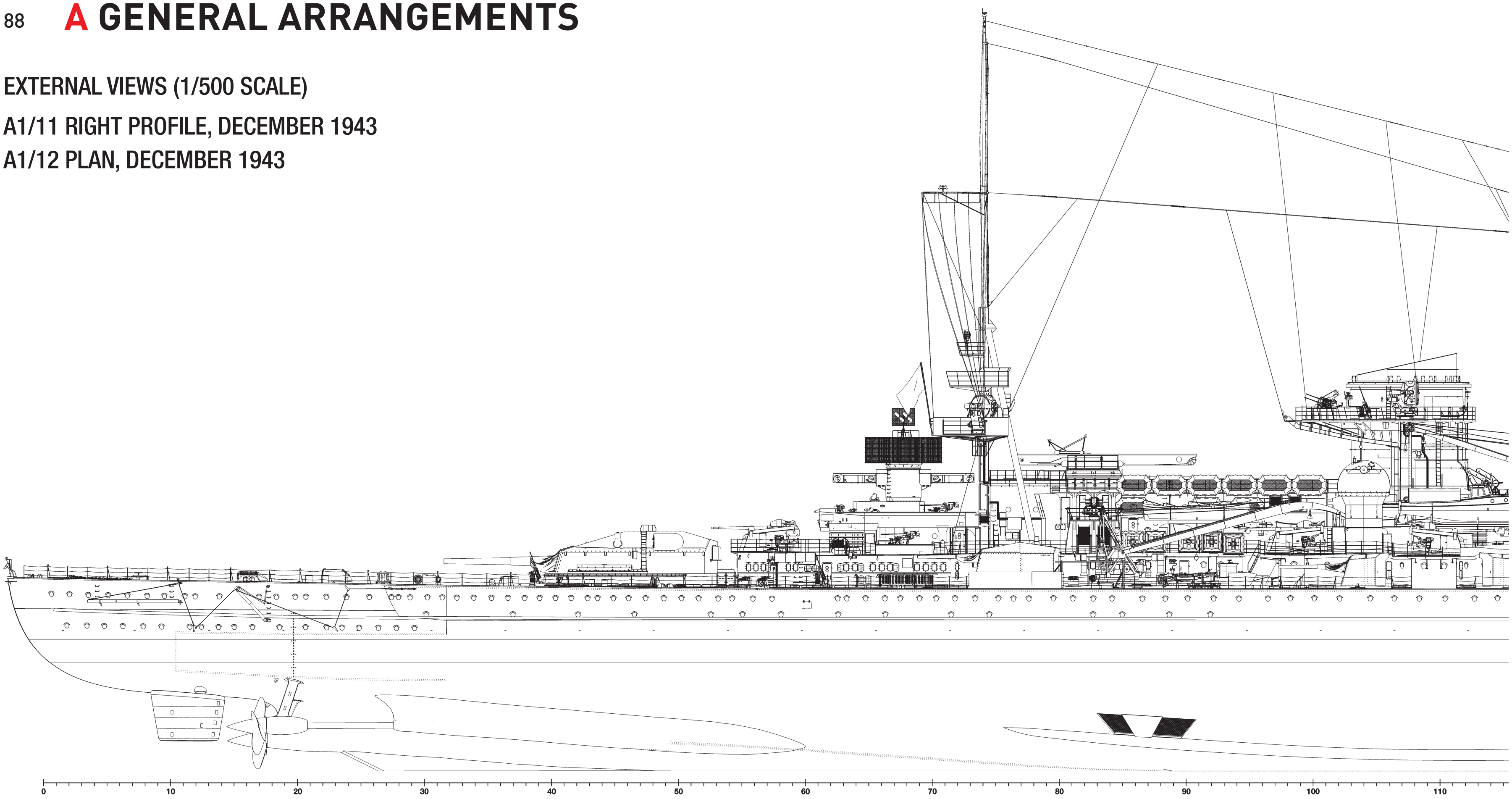

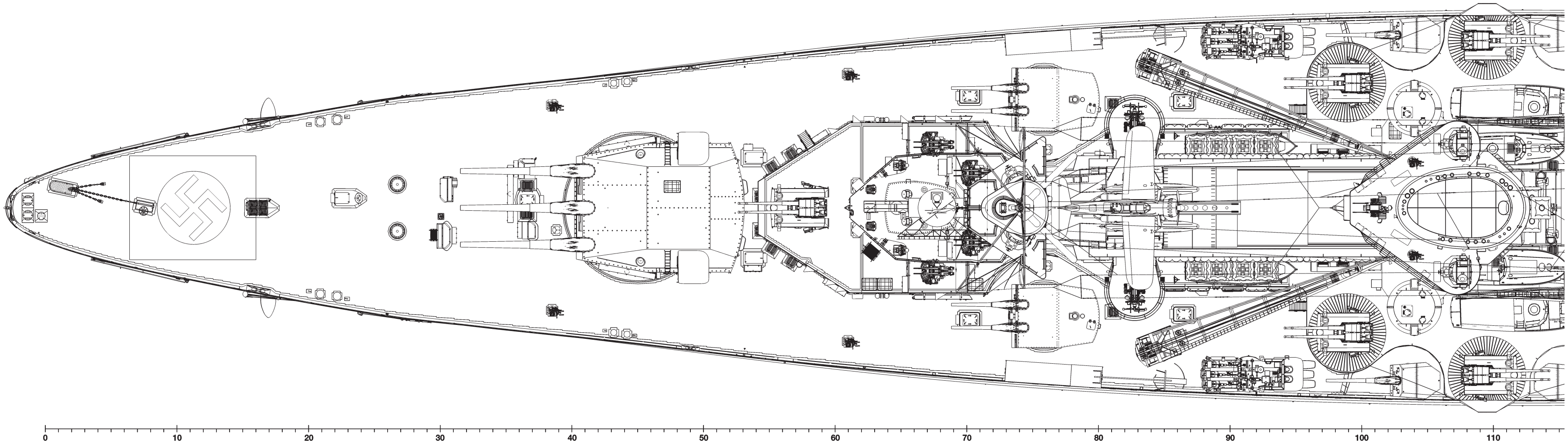

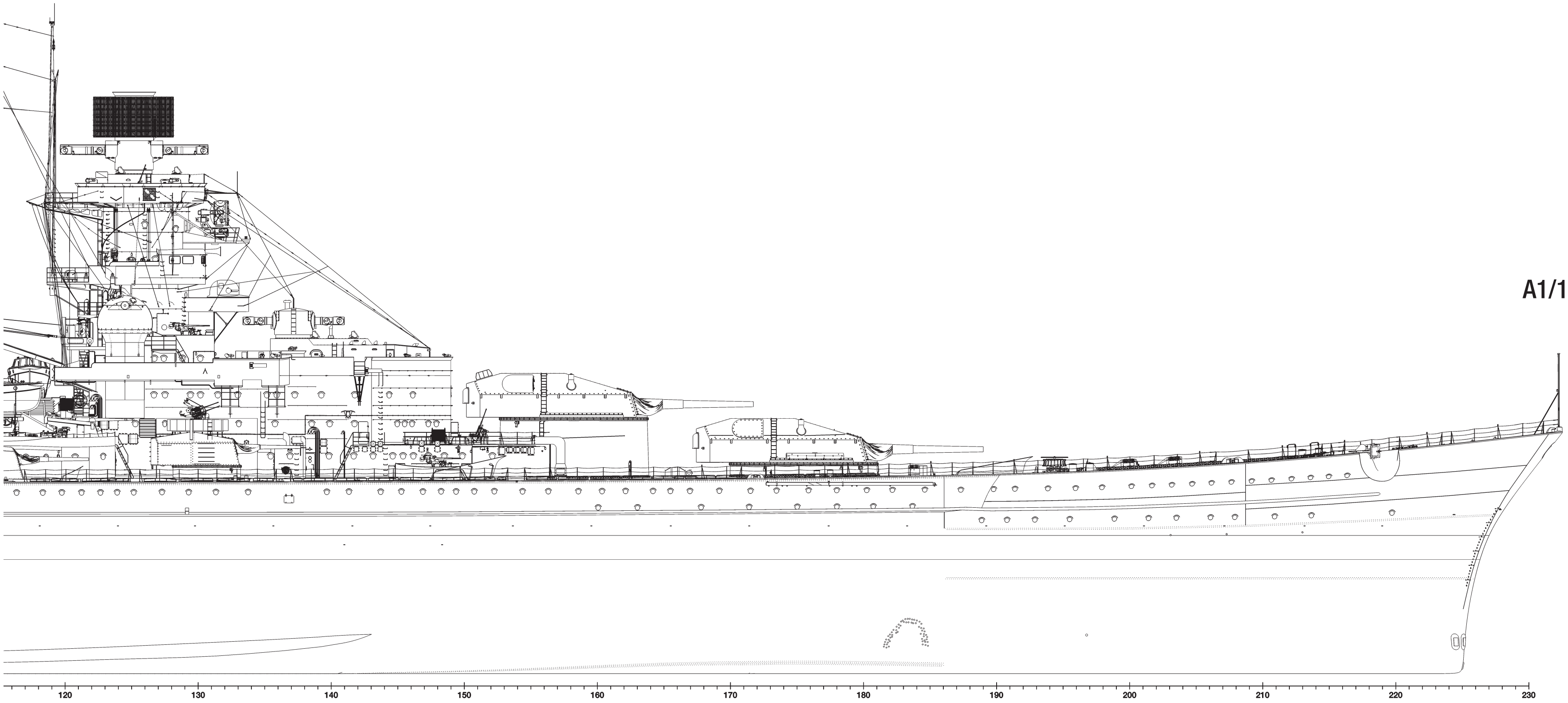
120
130
140
150
160
170
180
190
200
210
220
230

A1/11

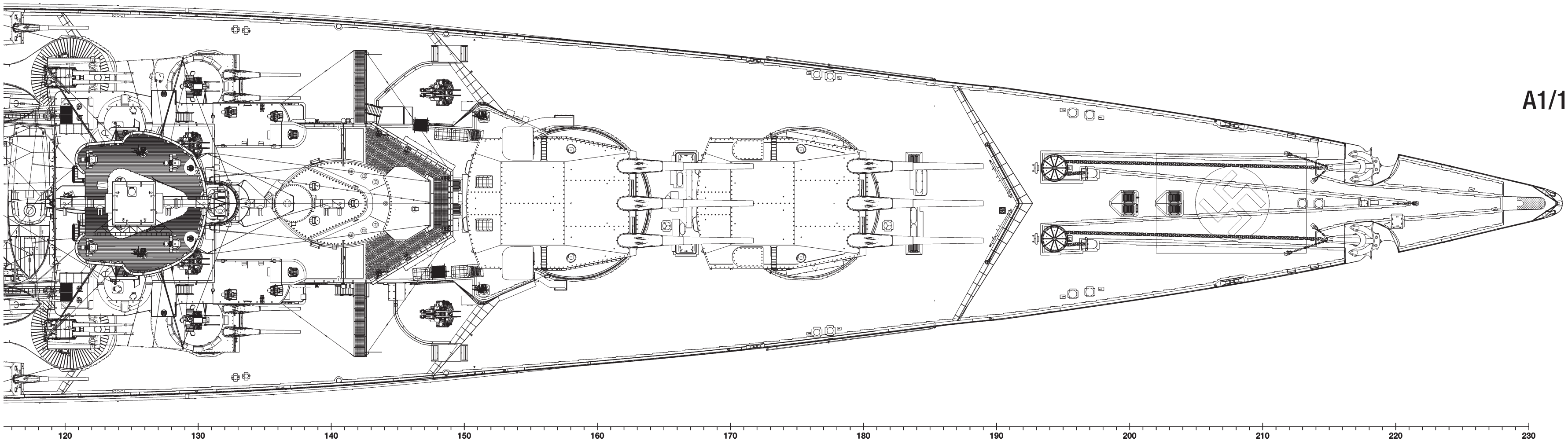
120
130
140
150
160
170
180
190
200
210
220
230

A1/12

EXTERNAL VIEWS (1/300 SCALE)

A1/13 FRONT VIEW, JANUARY 1939

A1/14 FRONT VIEW, DECEMBER 1943

A1/13

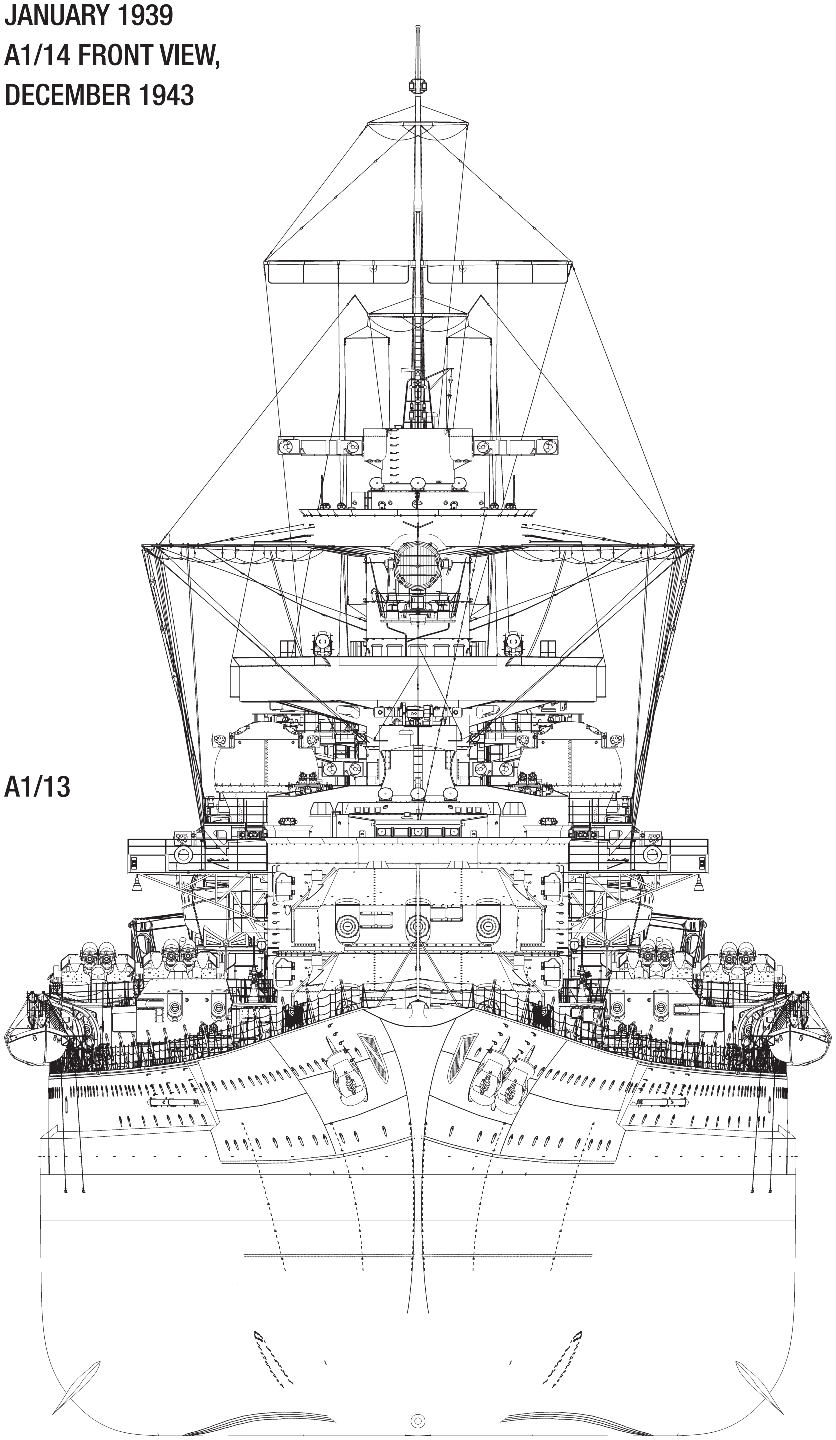

A1/14

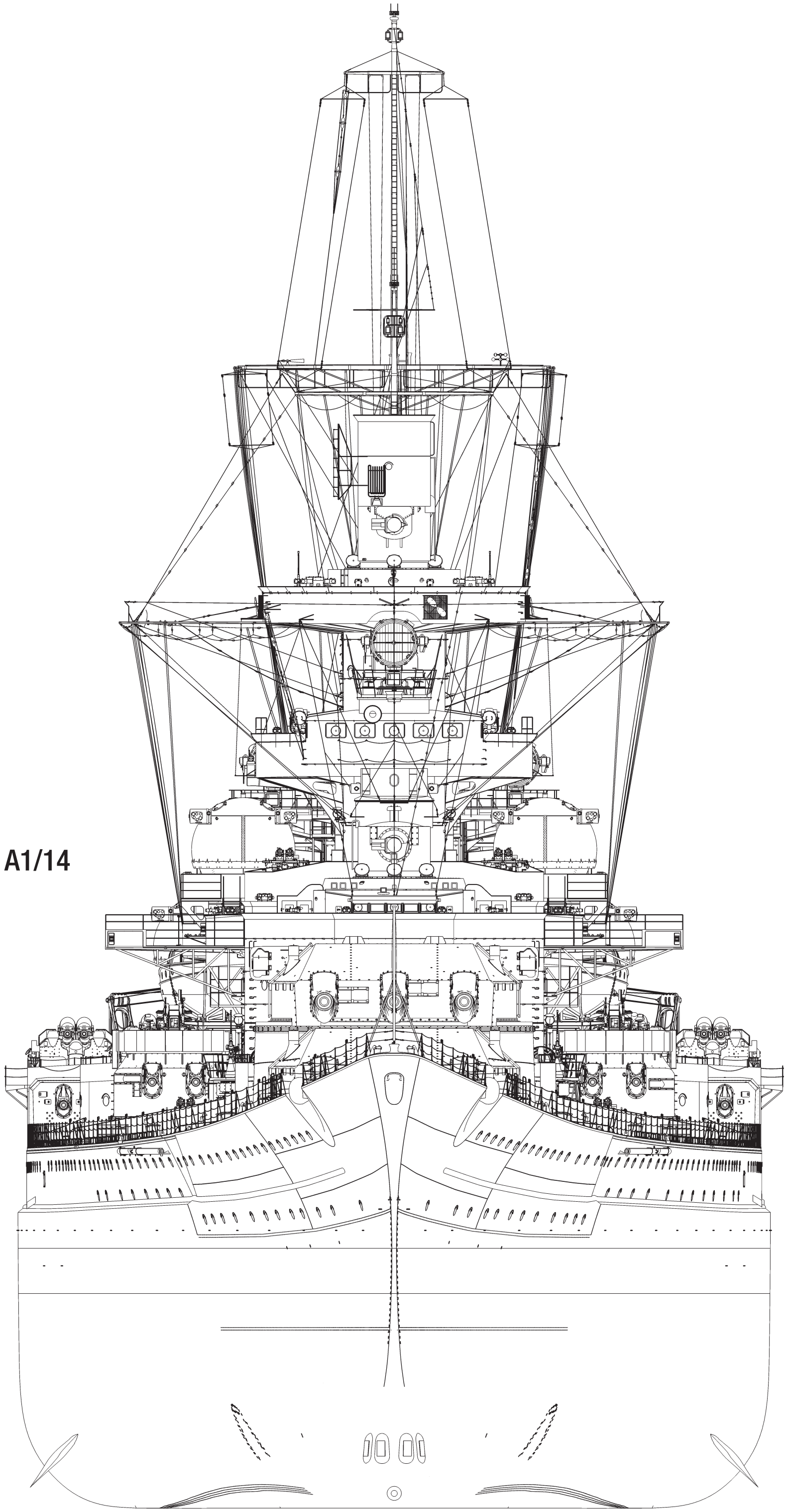

A1/15 BACK VIEW,
JANUARY 1939
A1/16 BACK VIEW,
DECEMBER 1943

A1/15

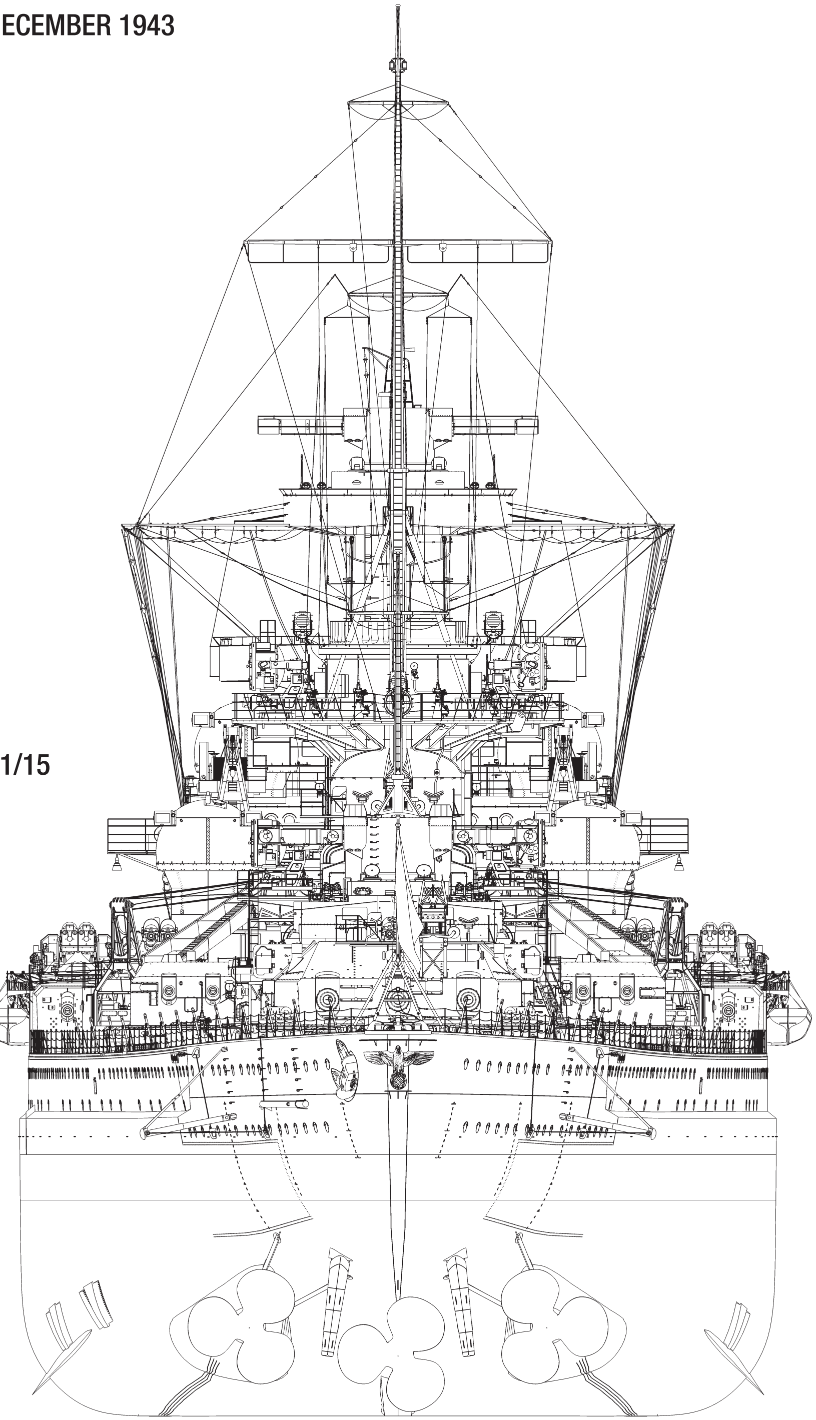

A1/16

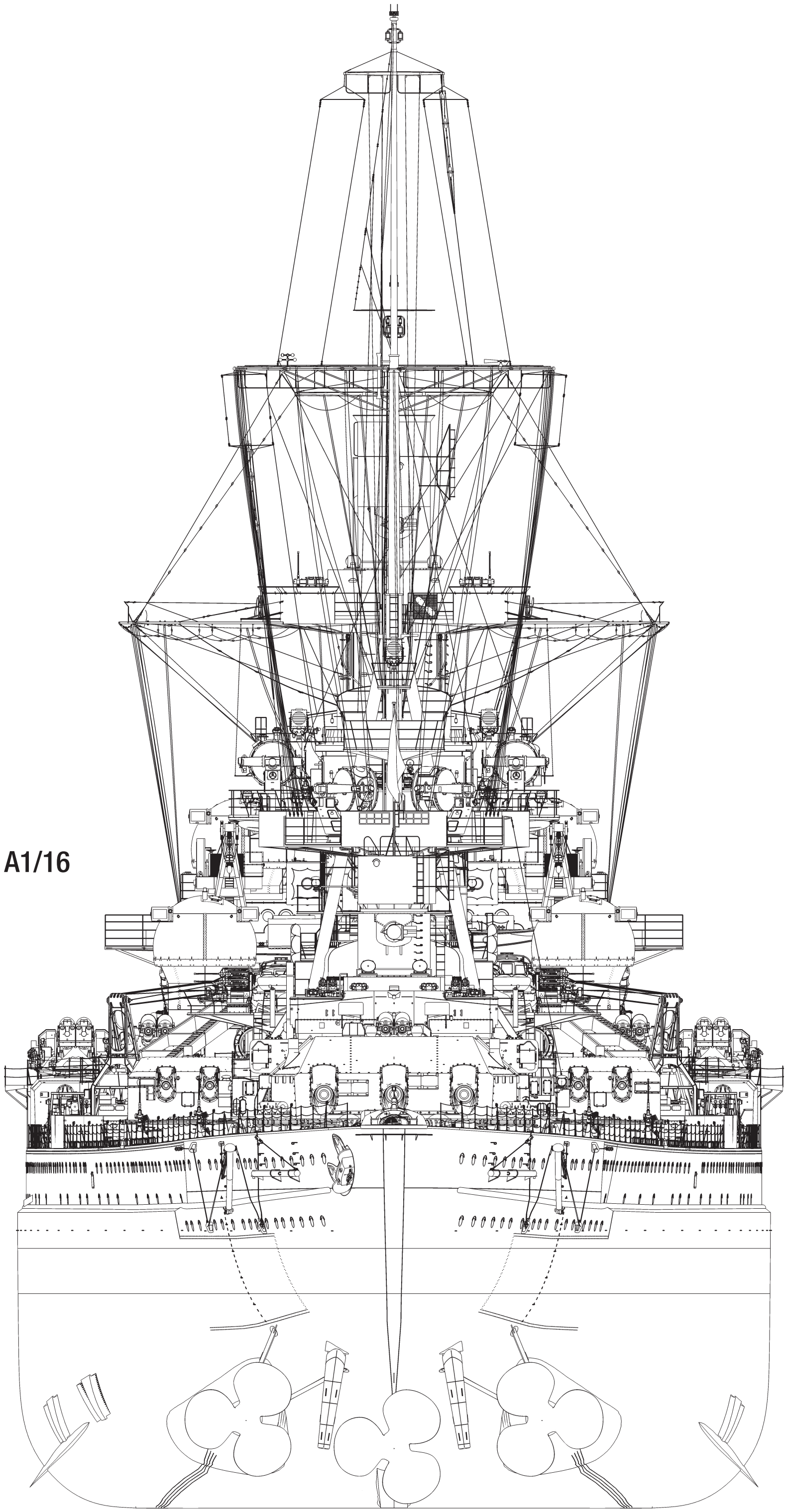

A2/1 INTERNAL PROFILE (1/500 SCALE)

A2/1

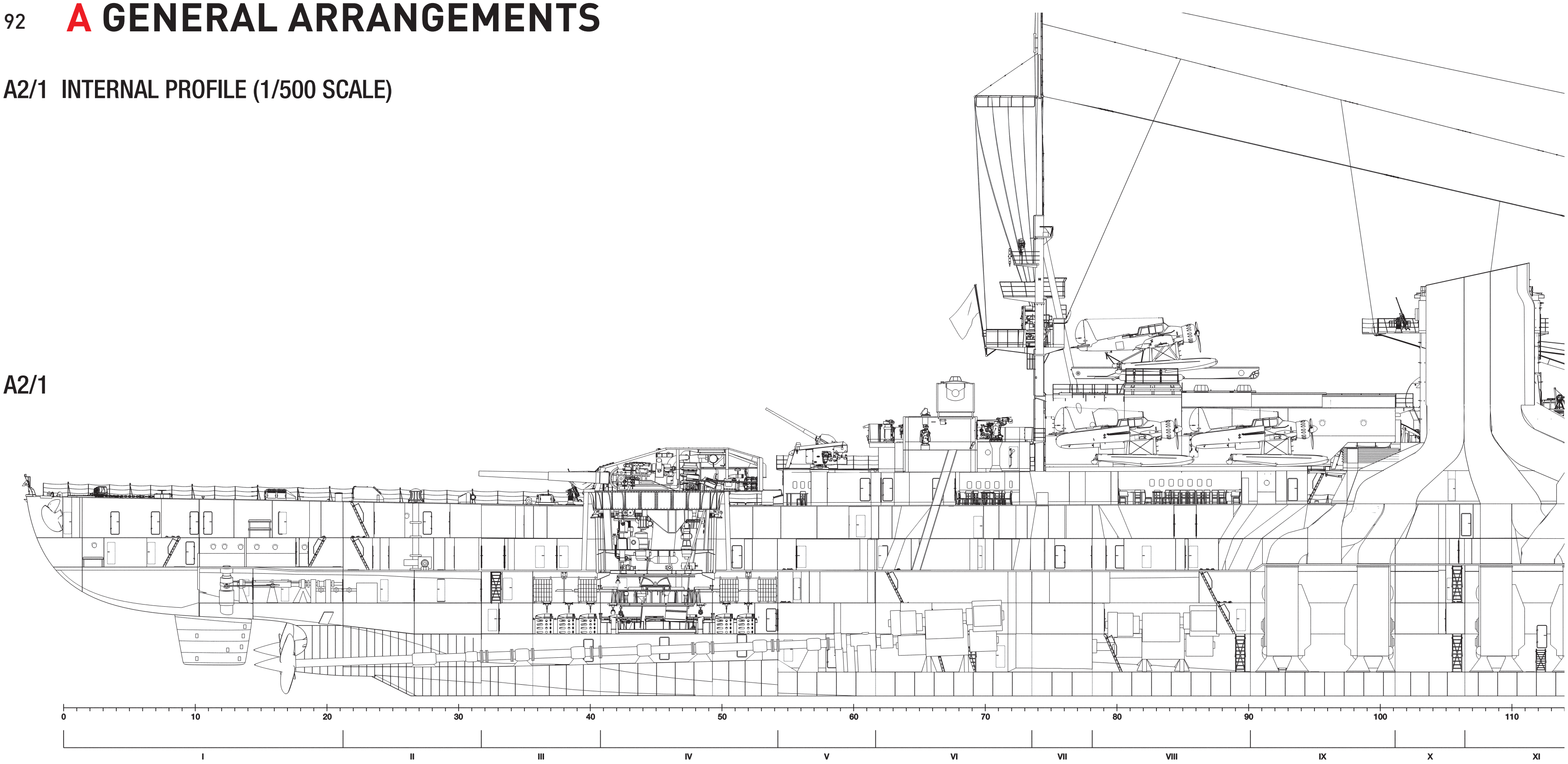

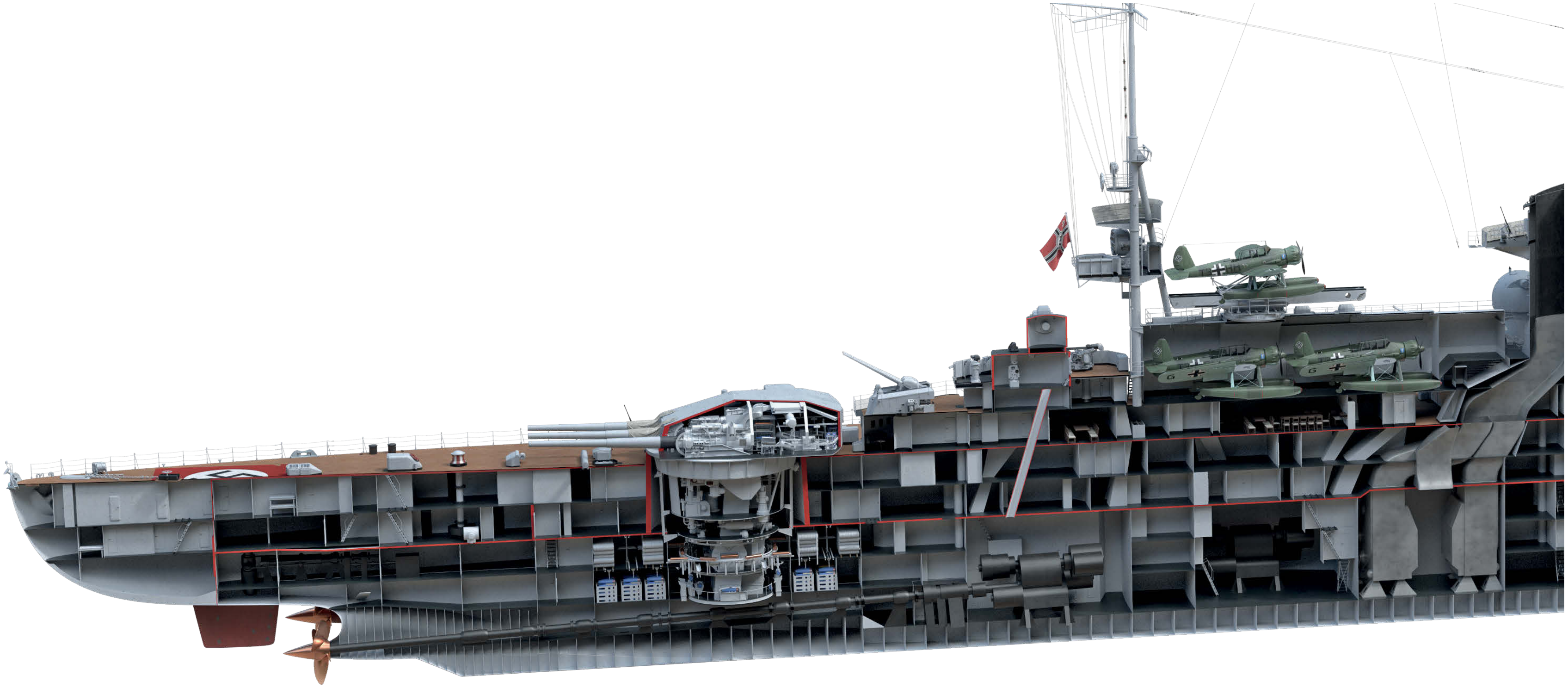

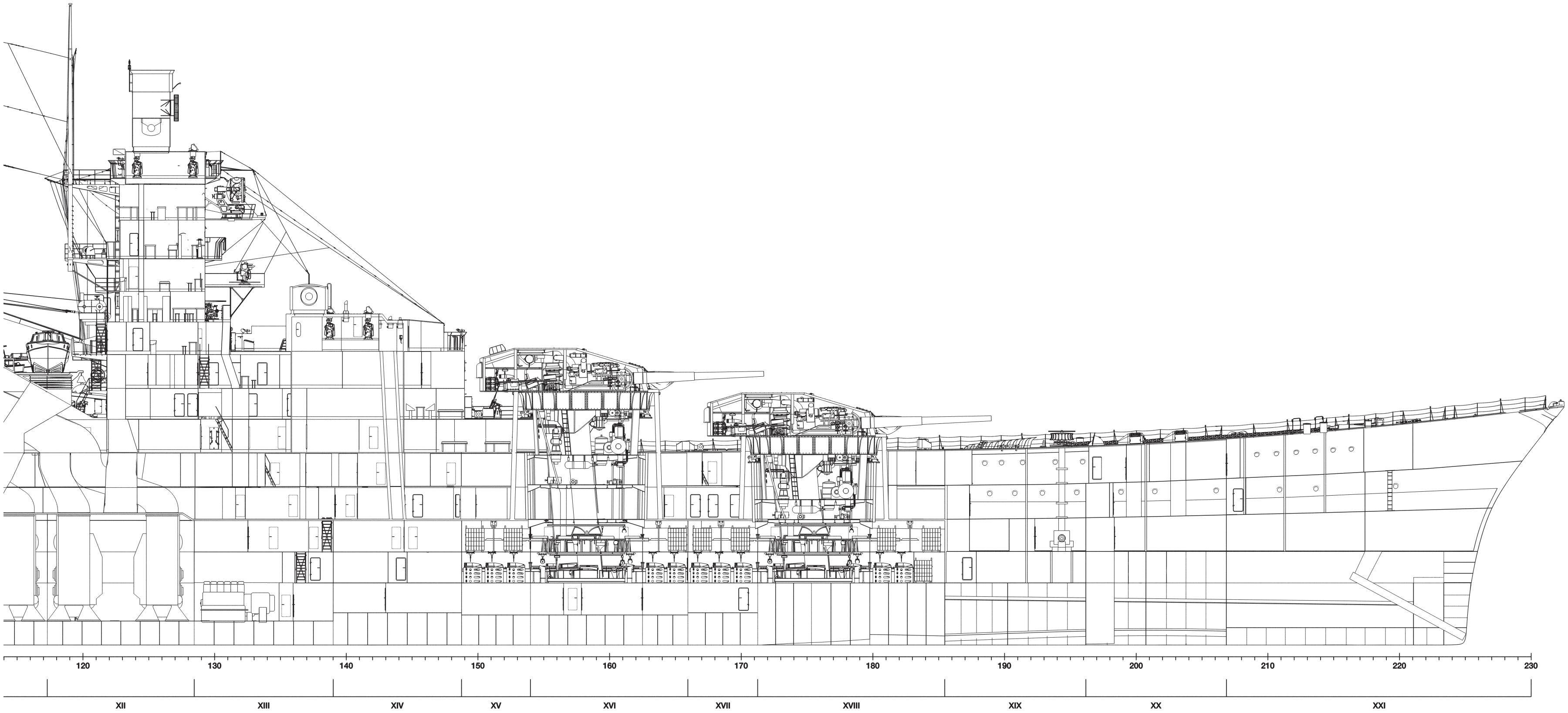
120
130
140
150
160
170
180
190
200
210
220
230
XII
XIII
XIV
XV
XVI
XVII
XVIII
XIX
XX
XXI

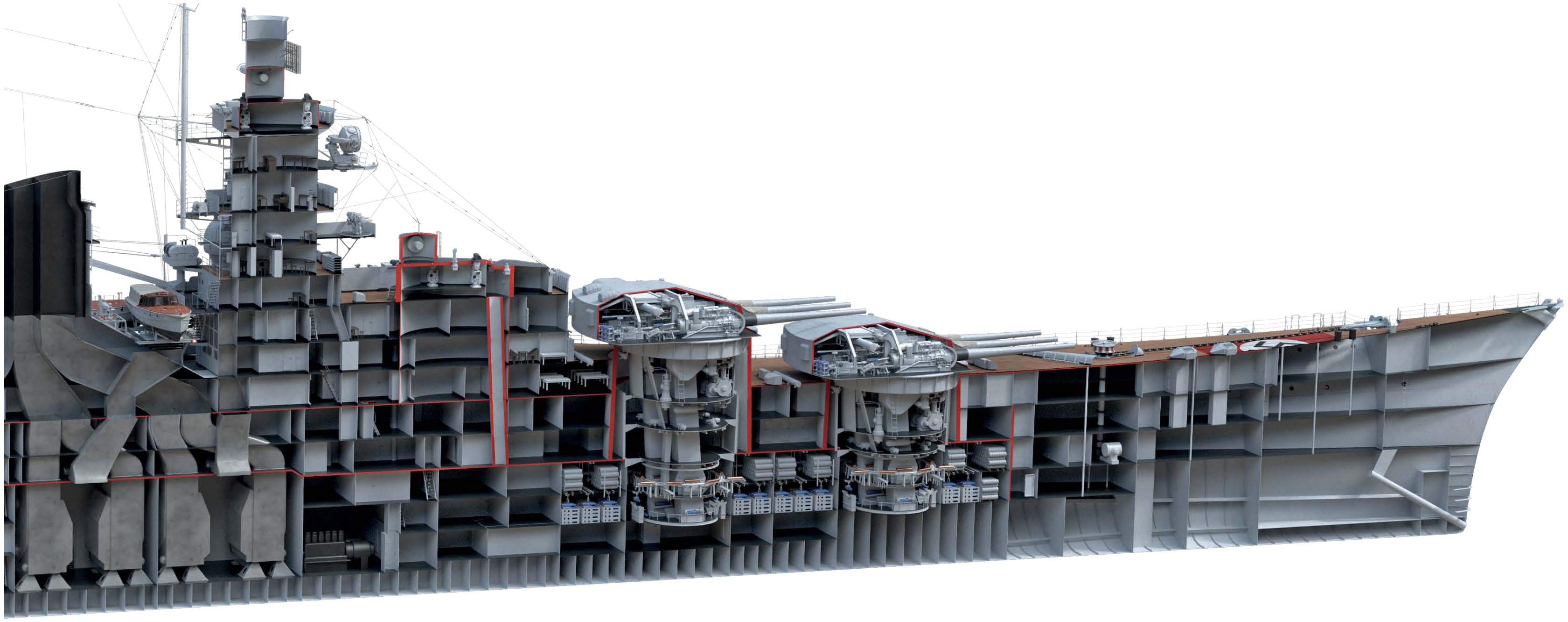

A2/2 INTERNAL PROFILE WITH ARMOUR LAYOUT (1/500 SCALE)
A2/3 TRANSVERSE SECTION WITH ARMOUR LAYOUT, FRAME 109 LOOKING FORWARD (1/400 SCALE)

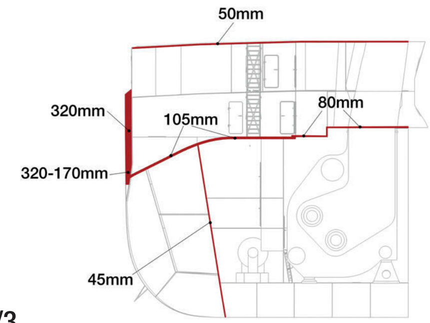

A2/3

A2/2

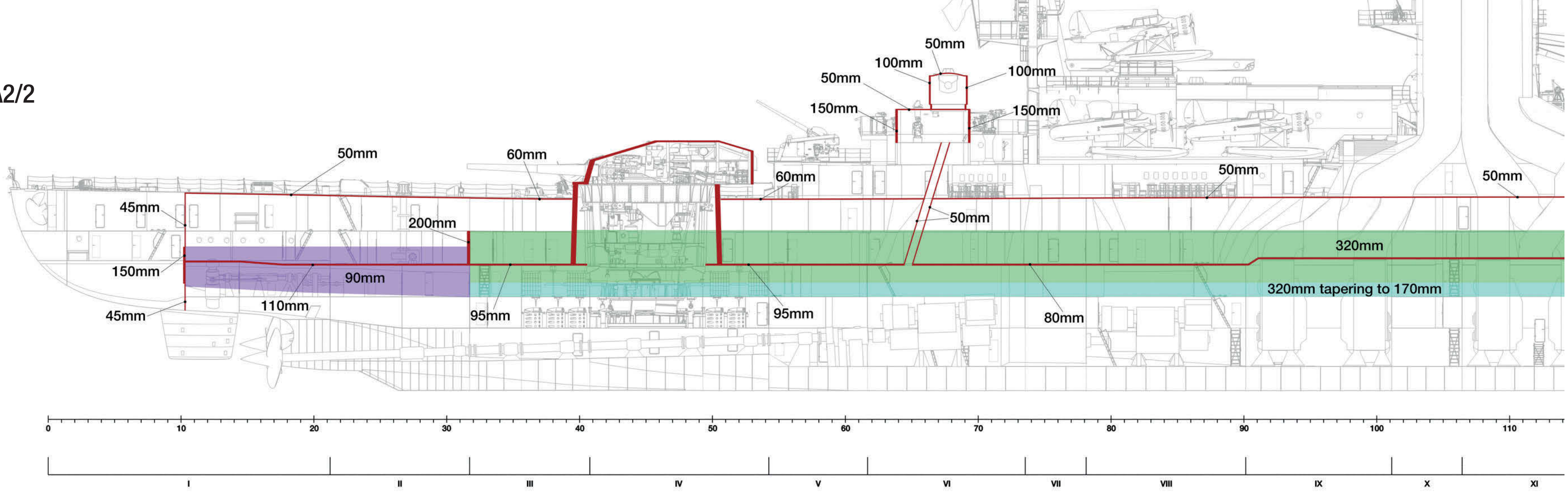

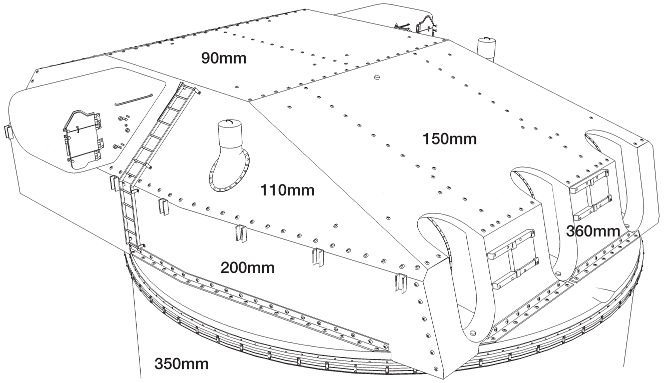

A2/4

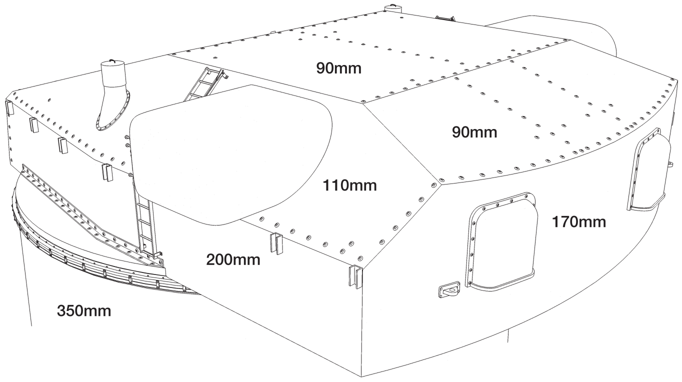

A2/5

A2/4 ARMOUR PLATES OF MAIN ARTILLERY TURRETS AND BARBETTES, PERSPECTIVE VIEW (NO SCALE)

A2/5 ARMOUR PLATES OF MAIN ARTILLERY TURRETS AND BARBETTES, PERSPECTIVE VIEW (NO SCALE)

A2/6 ARMOUR PLATES OF SECONDARY ARTILLERY TURRETS AND BARBETTES, PERSPECTIVE VIEW (NO SCALE)

A2/7 ARMOUR PLATES OF SECONDARY ARTILLERY TURRETS AND BARBETTES, PERSPECTIVE VIEW (NO SCALE)

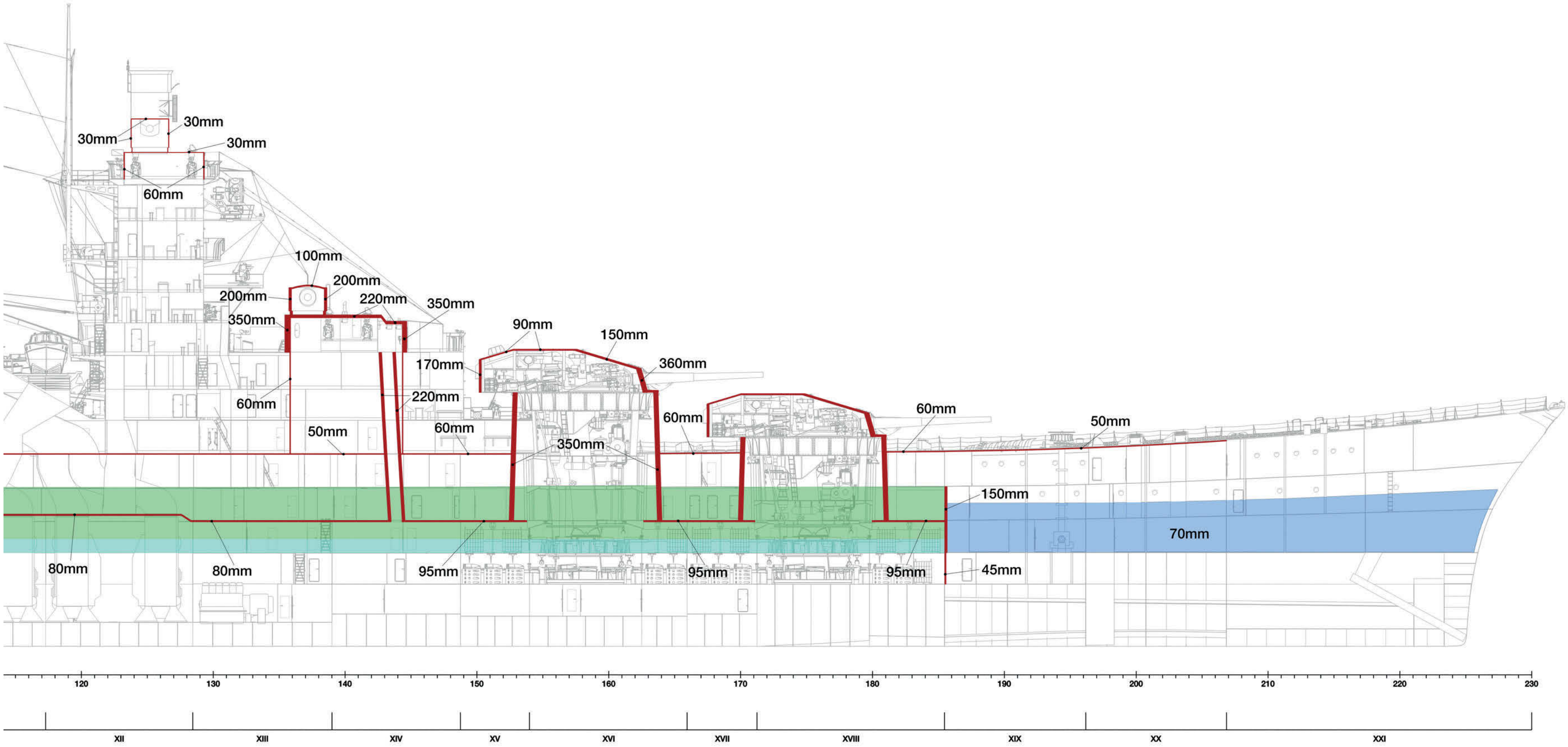

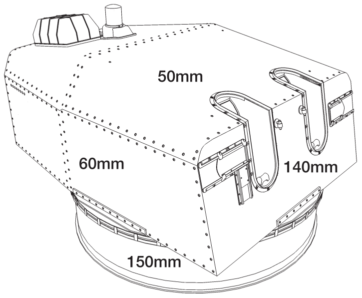

A2/6

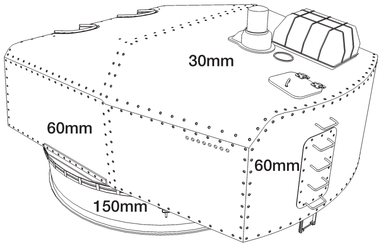

A2/7

HULL EXTERNAL VIEWS (1/500 SCALE)

B1/1 RIGHT PROFILE
B1/2 BOTTOM VIEW
B1/3 LEFT PROFILE

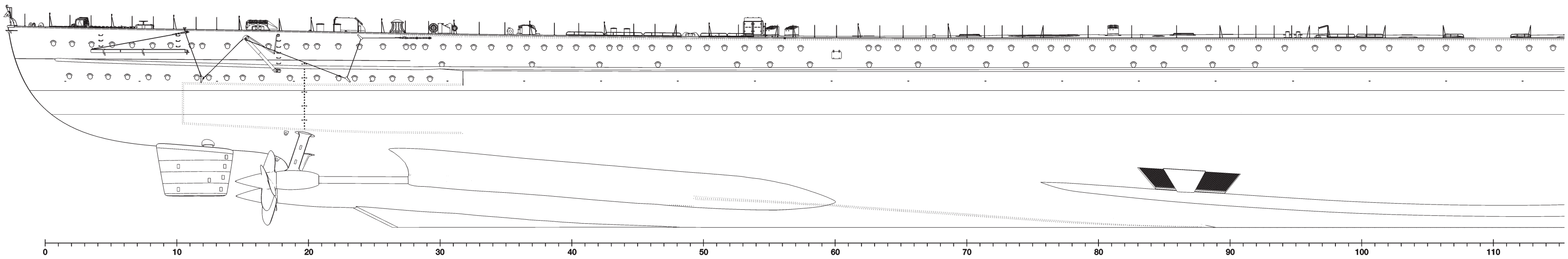

B1/1

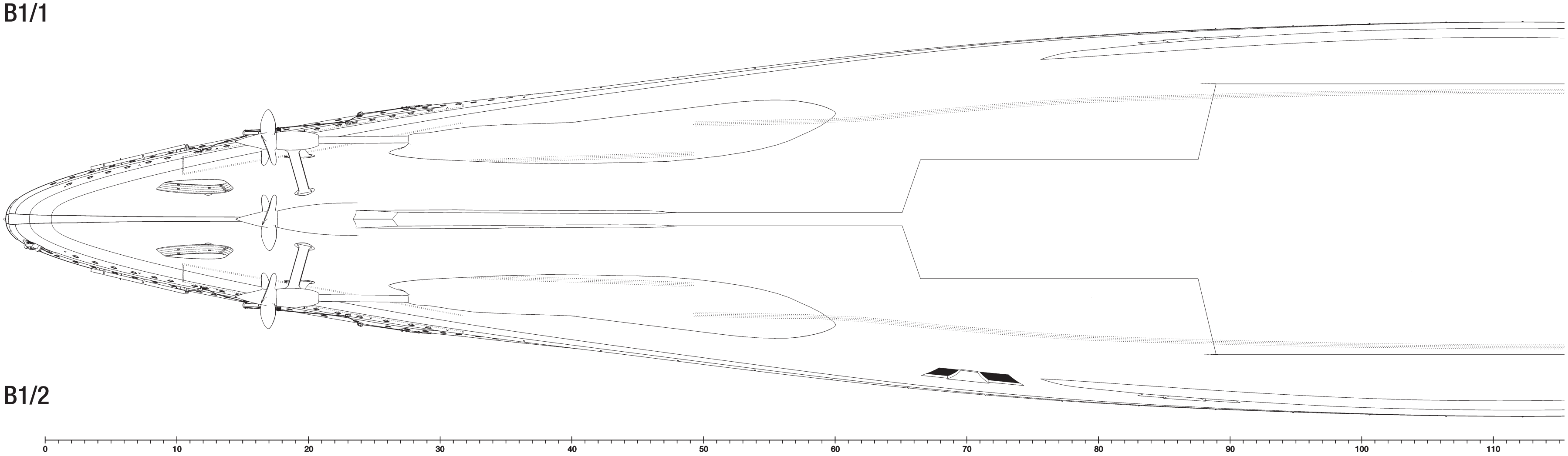

B1/2

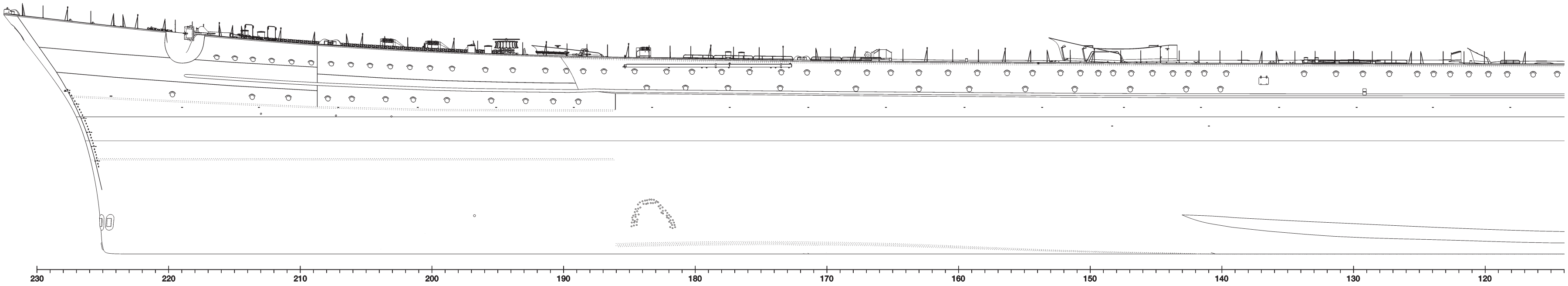

B1/3

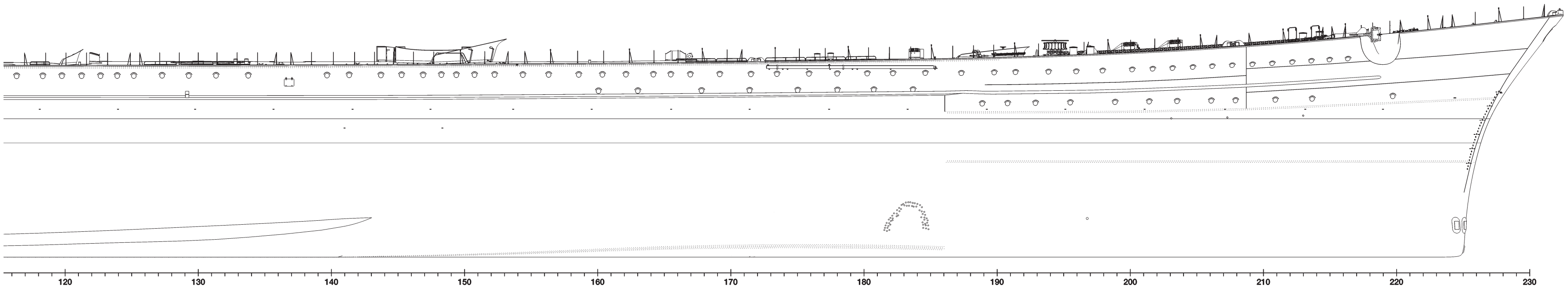
120
130
140
150
160
170
180
190
200
210
220
230

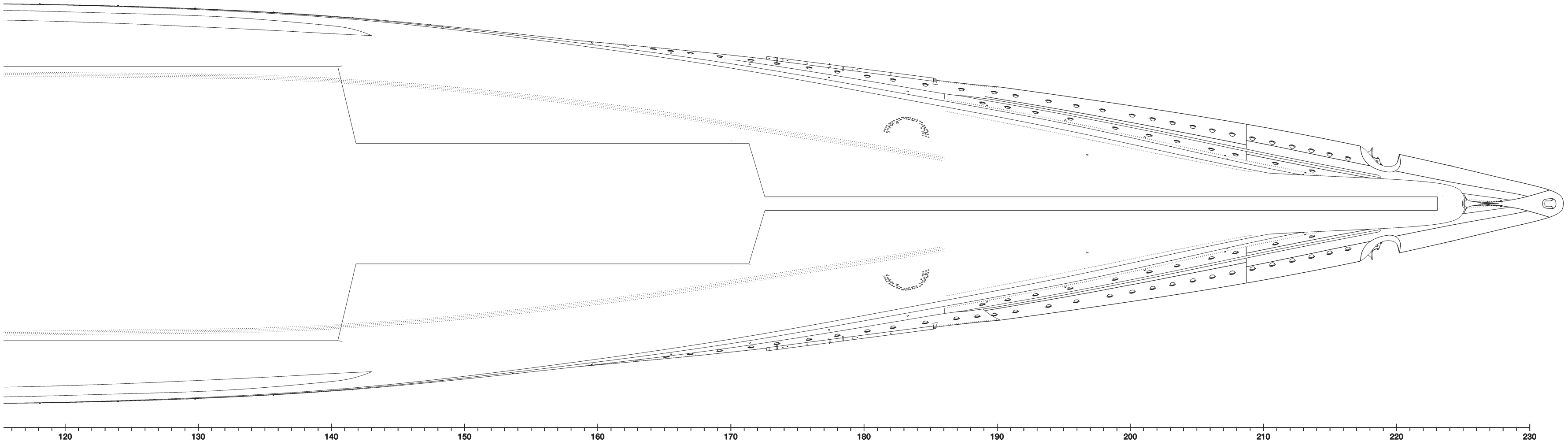
120
130
140
150
160
170
180
190
200
210
220
230

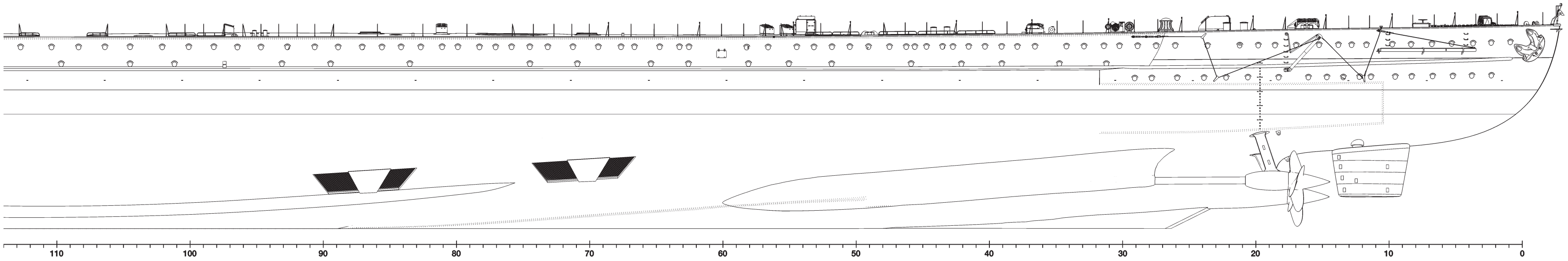
110
100
90
80
70
60
50
40
30
20
10
0

HULL EXTERNAL VIEWS (1/200 SCALE)

B1/4 FRONT VIEW

B1/5 BACK VIEW

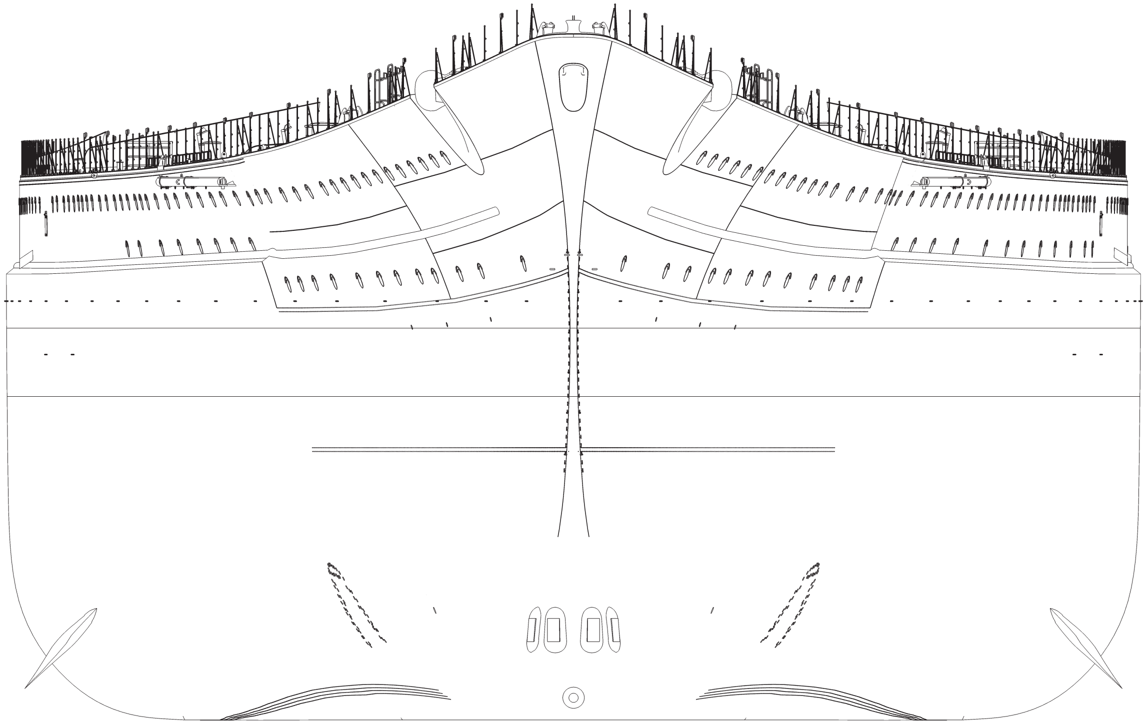

B1/4

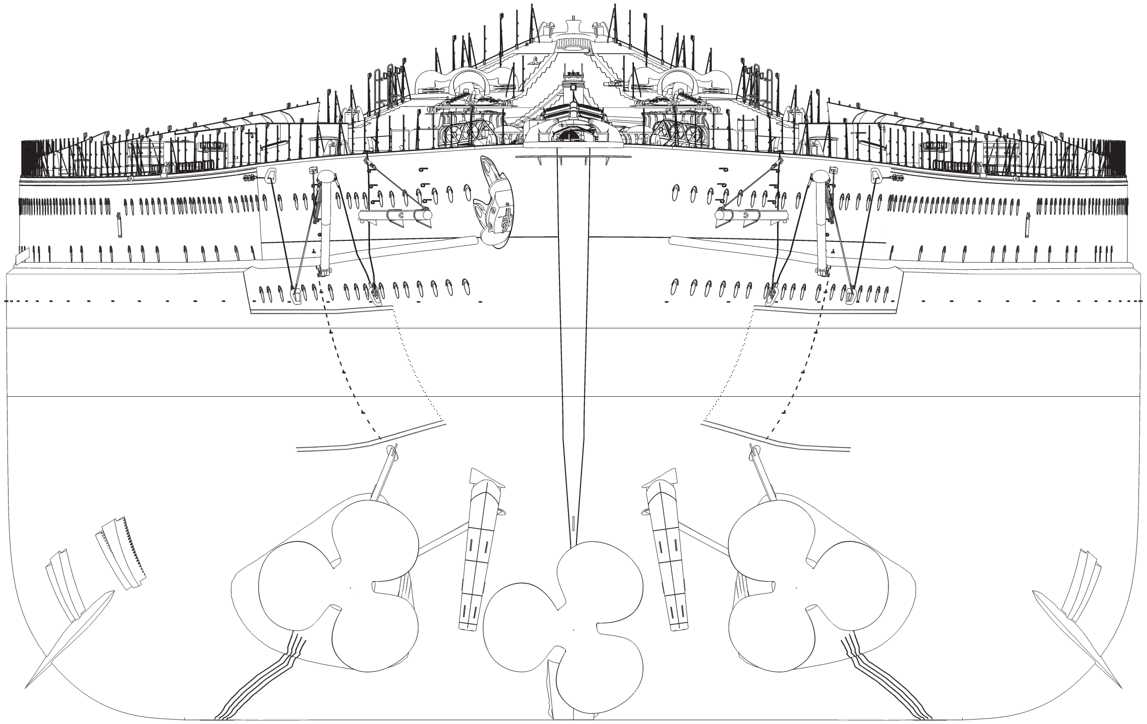

B1/5

B1/6 RIGHT PROFILE FRAGMENT WITH FULLY EXTENDED *BUGSPIERE* - ROD FOR ATTACHING PARAVANE TOW LINES (1/500 SCALE)
B1/7 RIGHT PROFILE FRAGMENT, ORIGINAL APPEARANCE OF THE STEM AT THE TIME OF COMMISSIONING (1/500 SCALE)

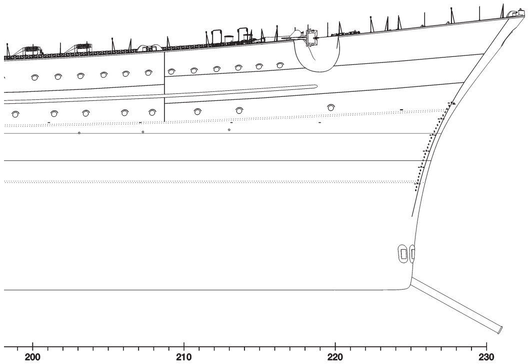

B1/6

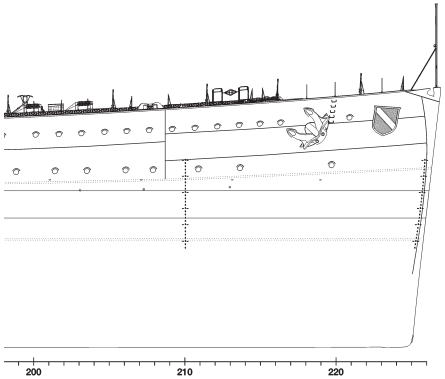

B1/7

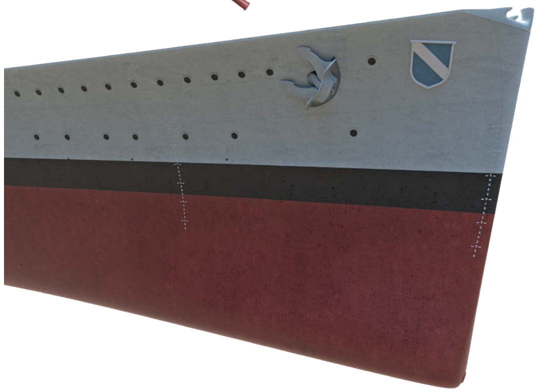

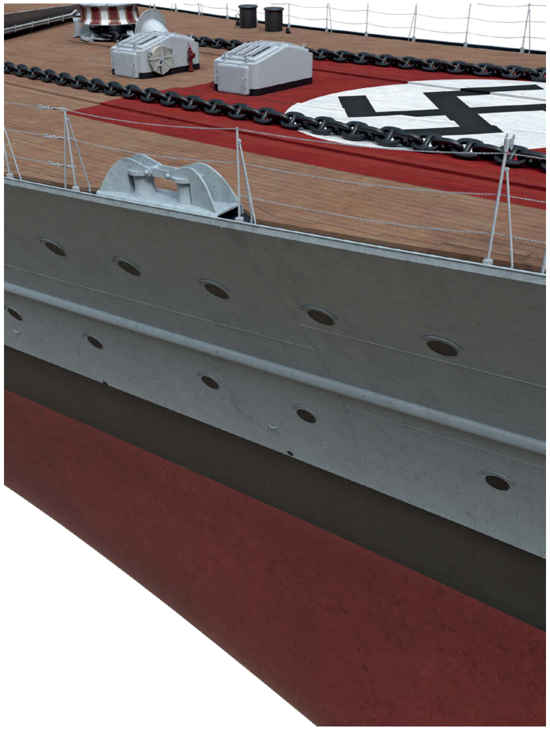

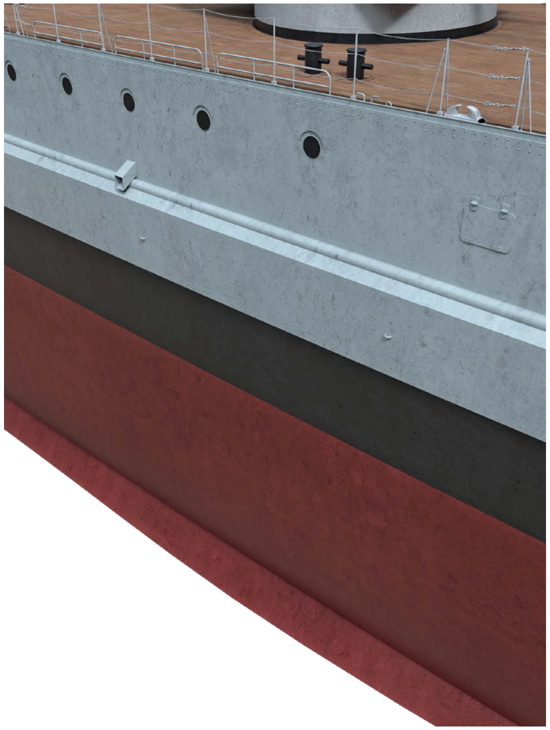

HULL LINES AND BODY PLANS

B1/8 SHEER ELEVATION (1/500 SCALE)
B1/9 WATERLINE PLAN (1/500 SCALE)

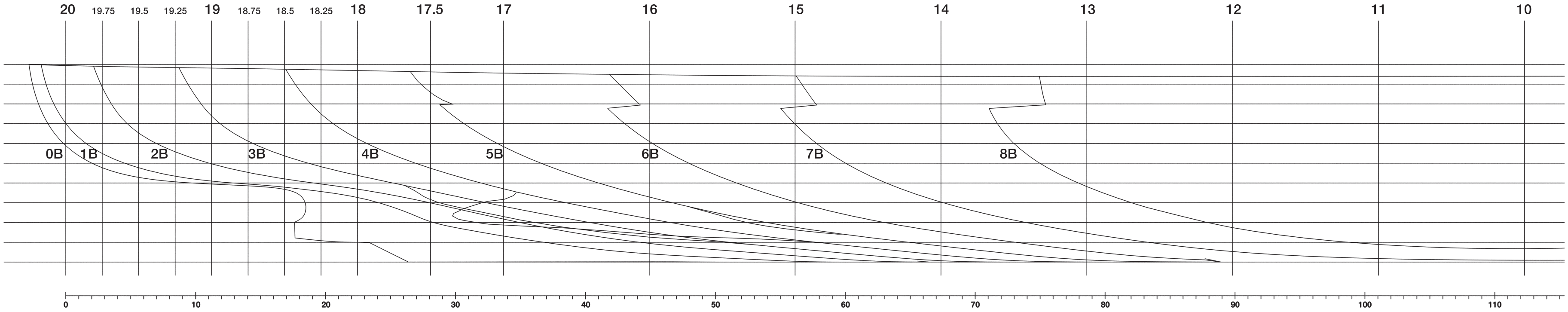

B1/8

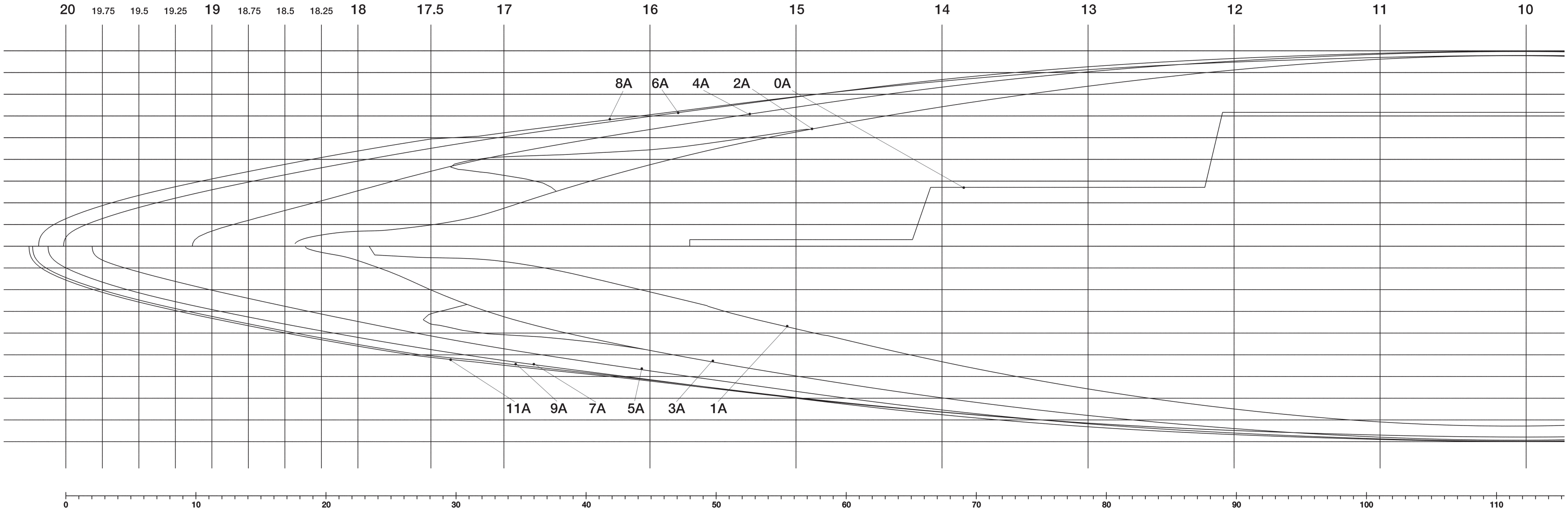

B1/9

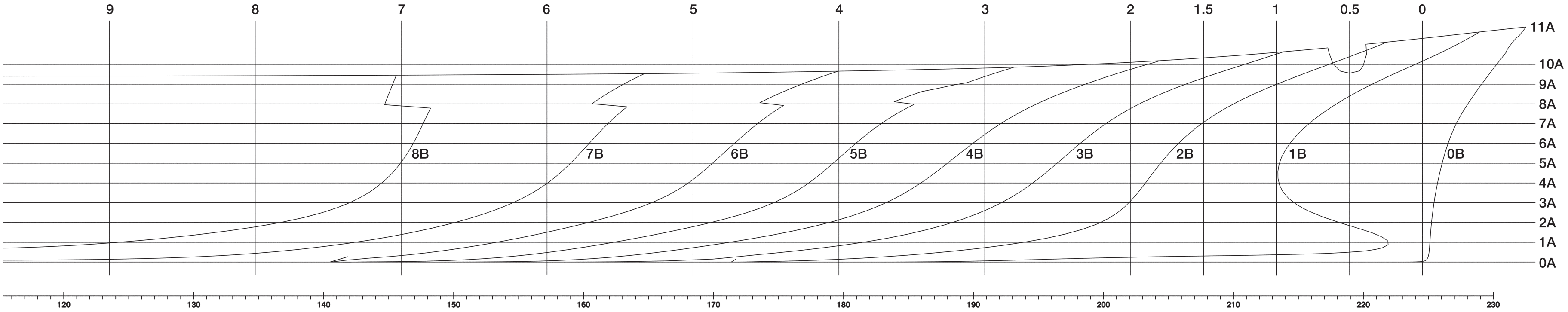
9
8
7
6
5
4
3
2
1.5
1
0.5
0
11A
10A
9A
8A
7A
6A
5A
4A
3A
2A
1A
0A
8B
7B
6B
5B
4B
3B
2B
1B
0B
120
130
140
150
160
170
180
190
200
210
220
230

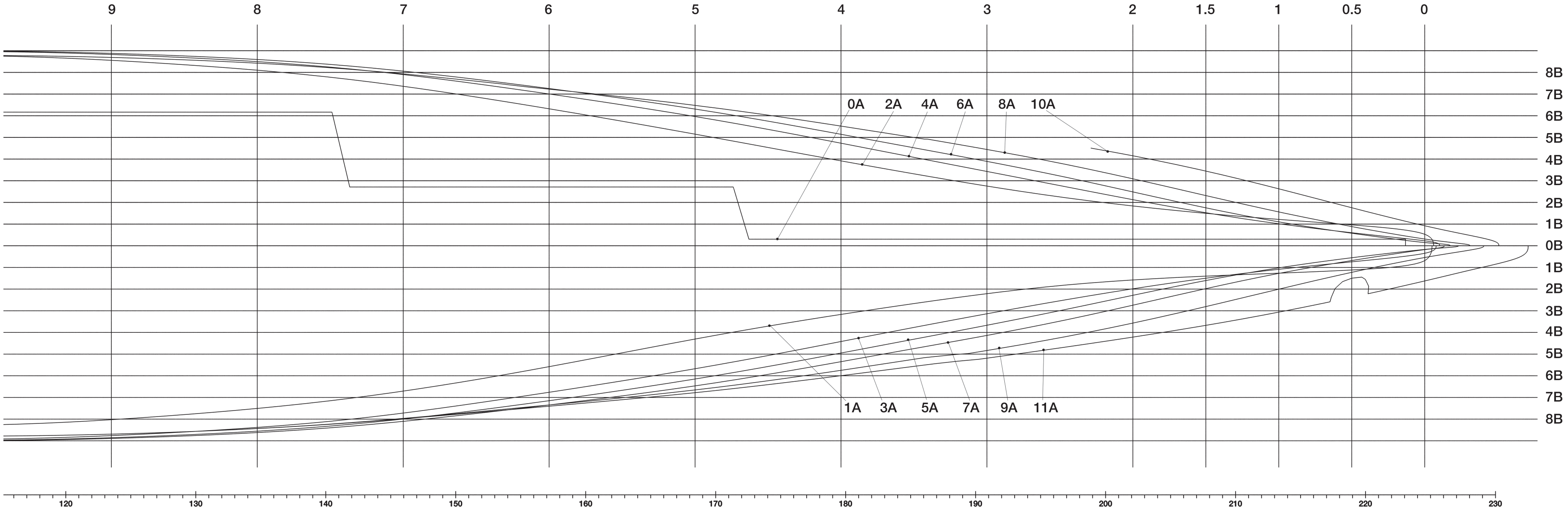
9
8
7
6
5
4
3
2
1.5
1
0.5
0
8B
7B
6B
5B
4B
3B
2B
1B
0B
1B
2B
3B
4B
5B
6B
7B
8B
0A
2A
4A
6A
8A
10A
1A
3A
5A
7A
9A
11A
120
130
140
150
160
170
180
190
200
210
220
230

HULL LINES AND BODY PLANS

B1/10 BODY PLANS (1/200 SCALE)

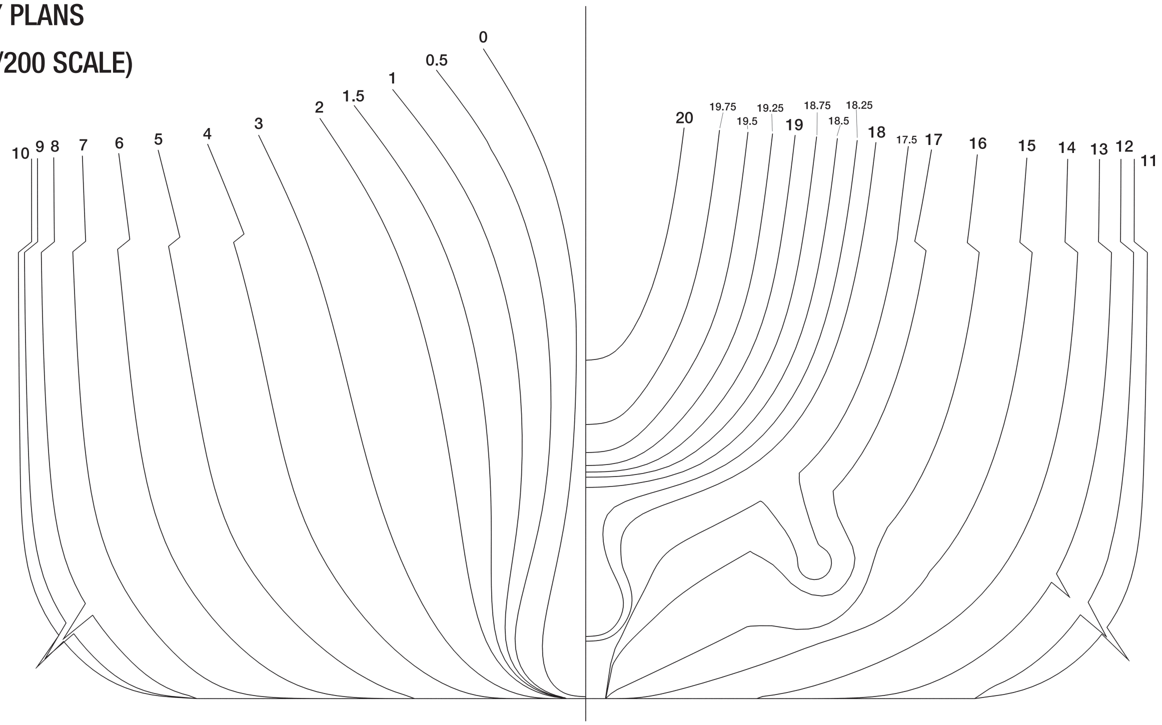

B1/10

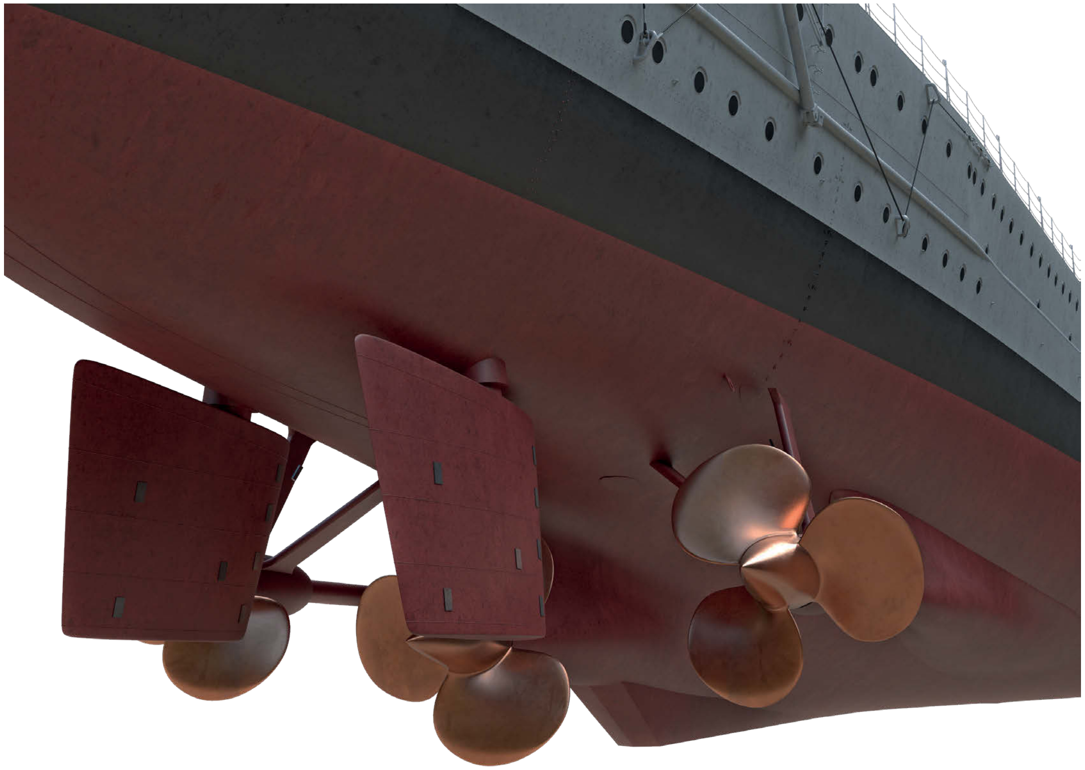

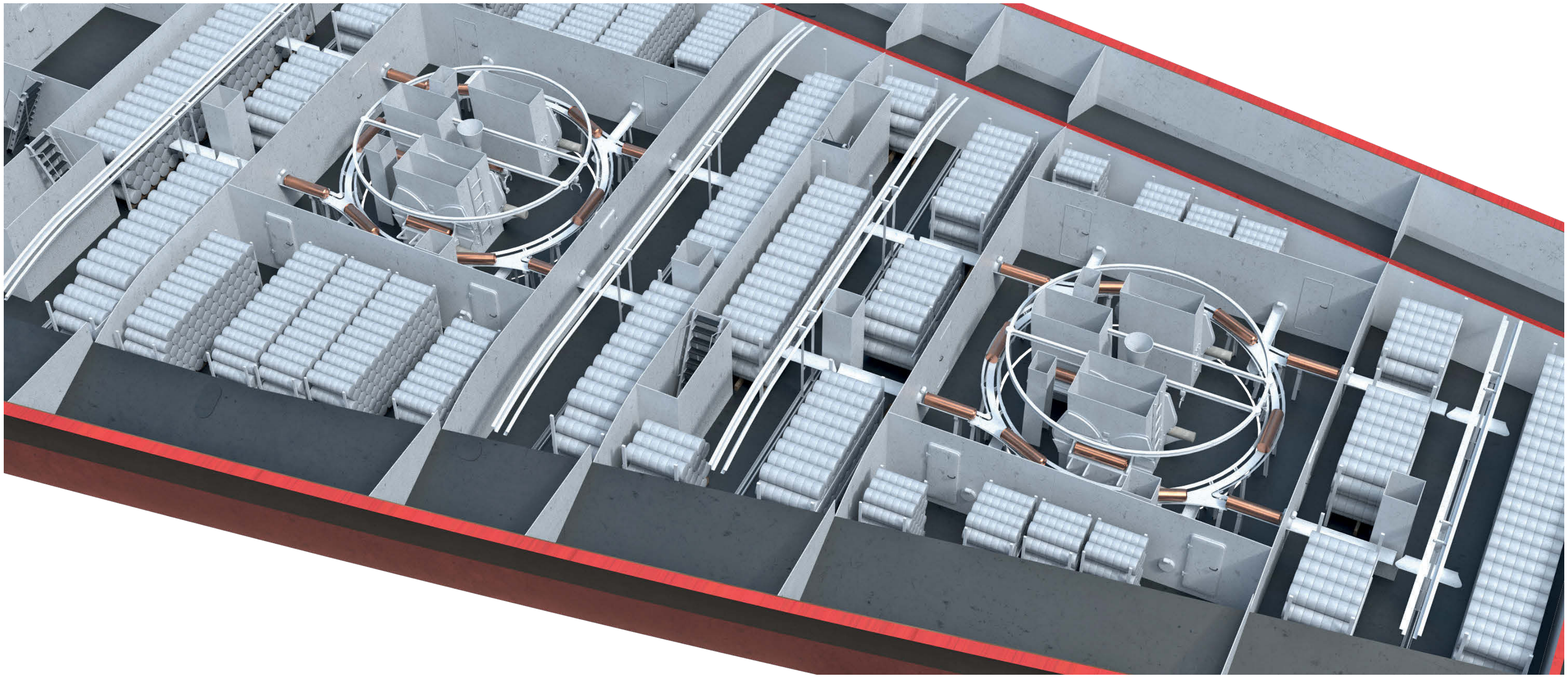

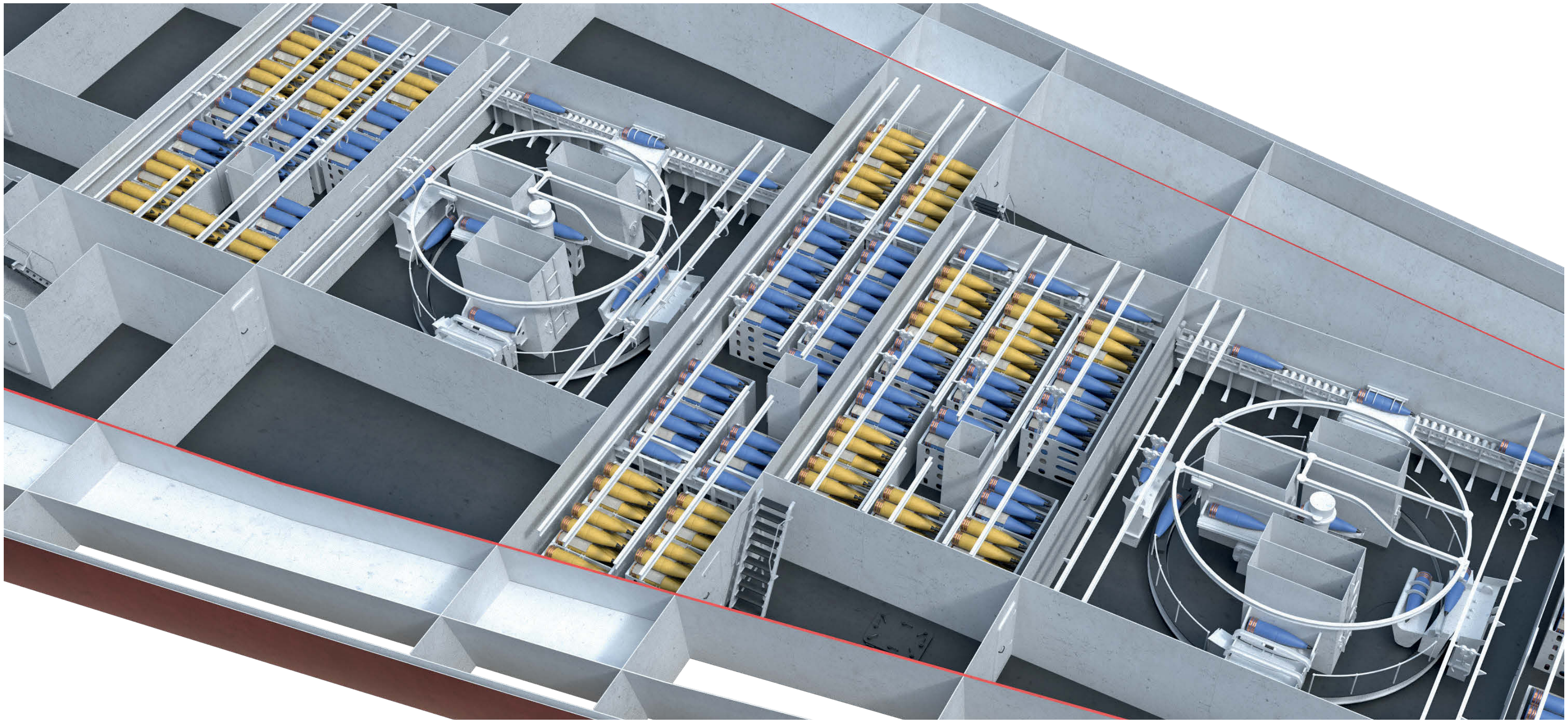

DECK PLANS (1/550 SCALE)

B2/1 UPPER DECK (*OBERDECK*)

B2/2 BATTERY DECK (*BATTERIEDECK*)

1 Smoke generator room
2 Shower
3 Toilet
4 Hatchway to deck below
5 Stairs to deck above
6 Cabin for two NCOs
7 Cabin for one NCO
8 NCO's kitchen
9 Cabin for four stewards
10 Bath
11 Administration office
12 Vent room
13 Cabin for two officers
14 Cabin for one officer
15 Storage room
16 Office
17 Telephone
18 Barbette of turret A
19 Barbette of turret B
20 Barbette of turret C
21 Oil control station
22 Teleprinter room
23 Washroom
24 Postal parcels room
25 Admiral's storage room
26 Lab
27 Hammock storage room
28 Vent shaft
29 Funnel uptake
30 NCO's workroom
31 Cabin for two sterwards
32 Cabin for three officers
33 Crew's living space

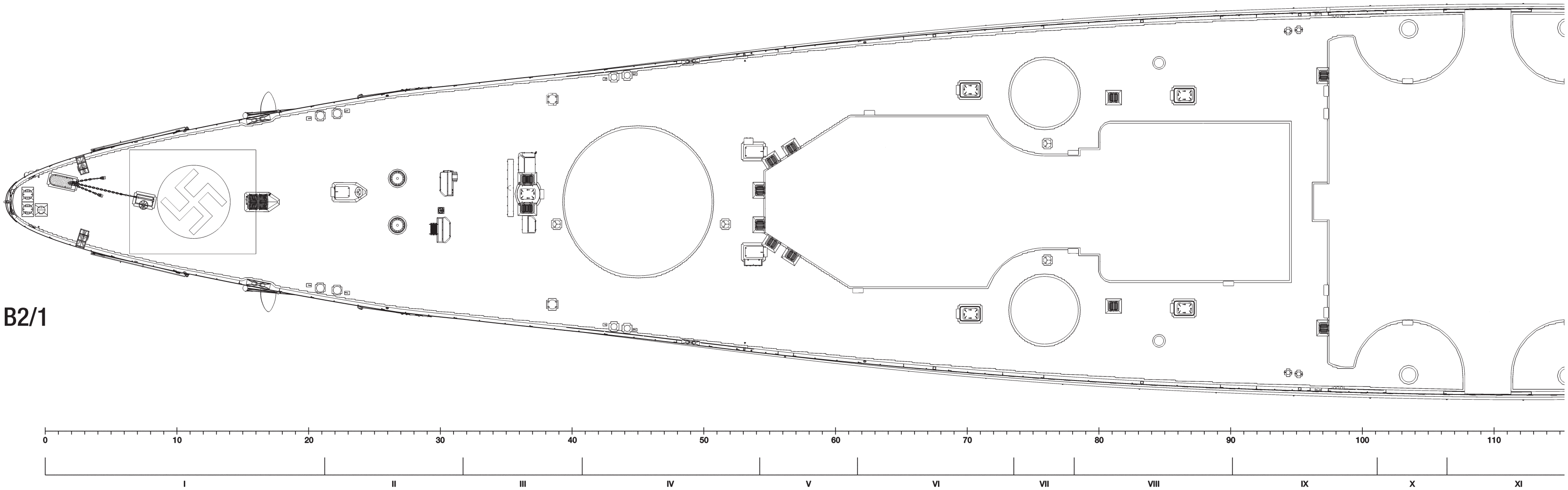

B2/1

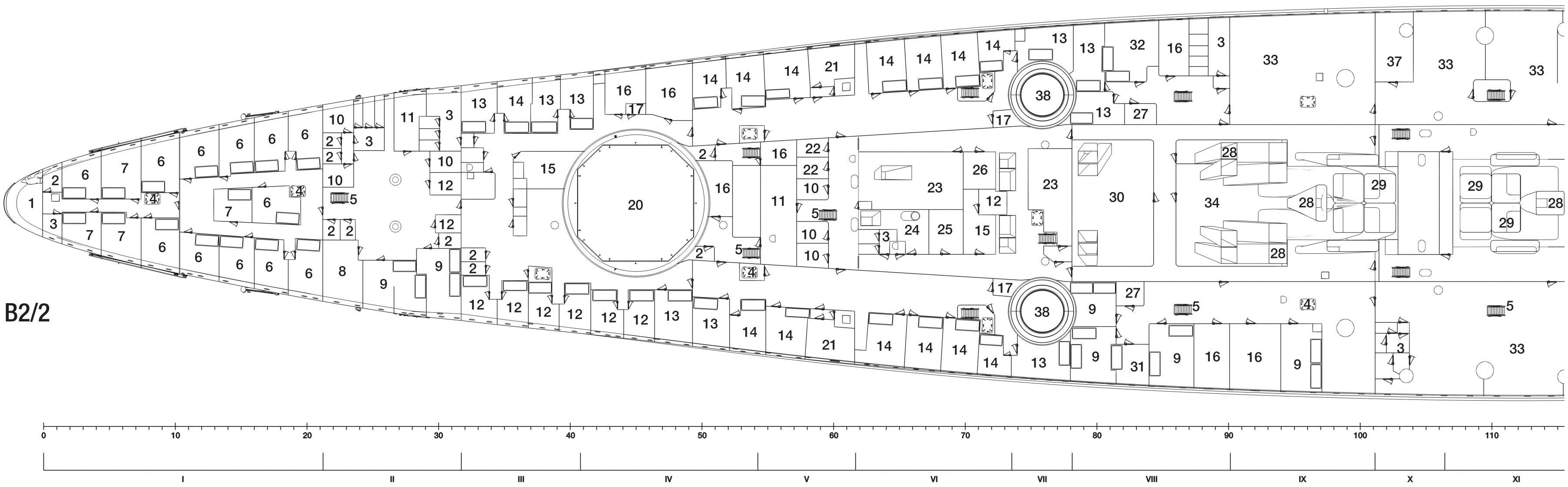

B2/2

34 Dry room
35 Mess
36 Kitchen
37 Pantry
38 Barbette of 15cm turret
39 Hairdresser
40 Tailor
41 Shoemaker
42 Laundry
43 Ironing room
44 Bakery
45 Canteen
46 Soda water machine
47 Carpenter's workshop
48 Sailmaker's workshop
49 Washroom and toilet

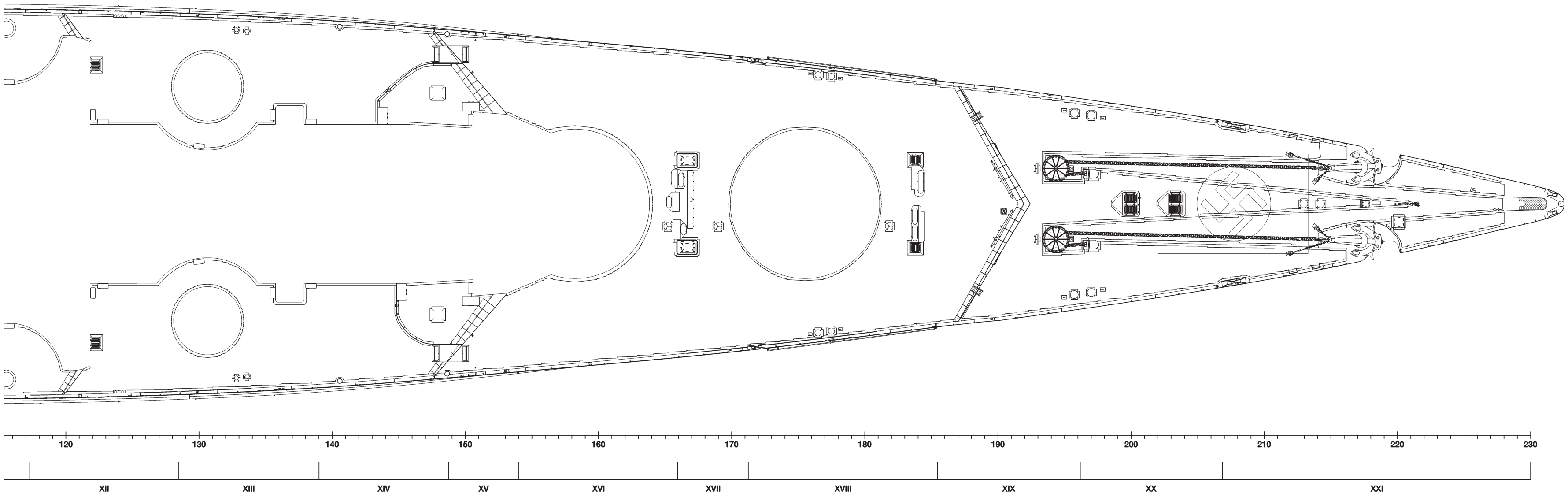

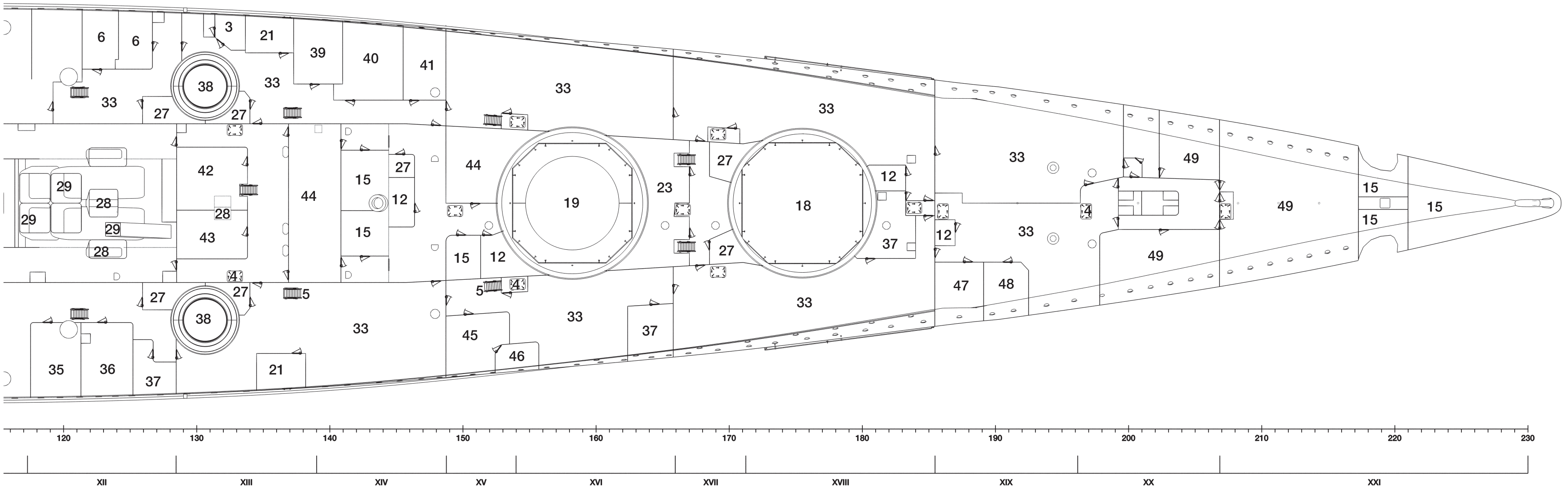

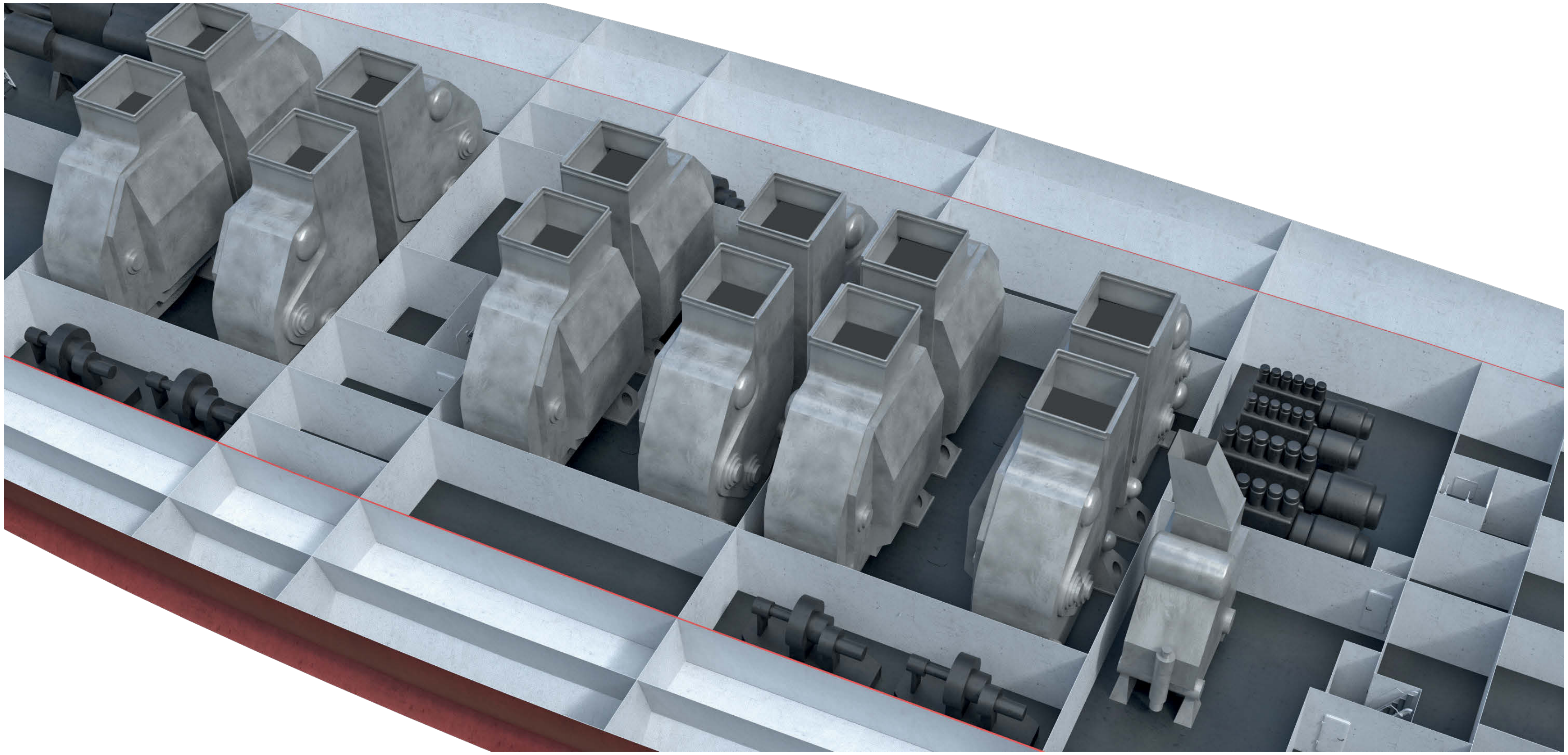

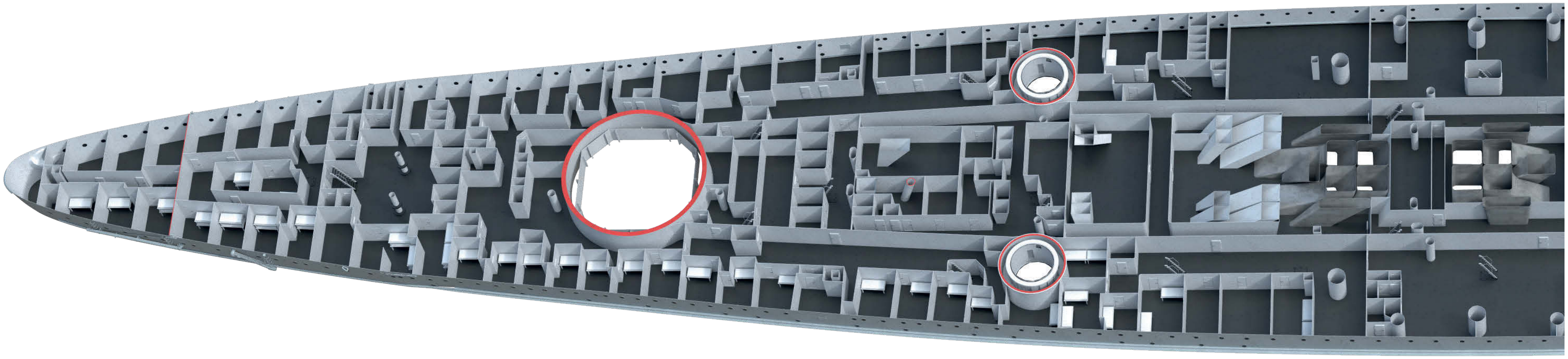

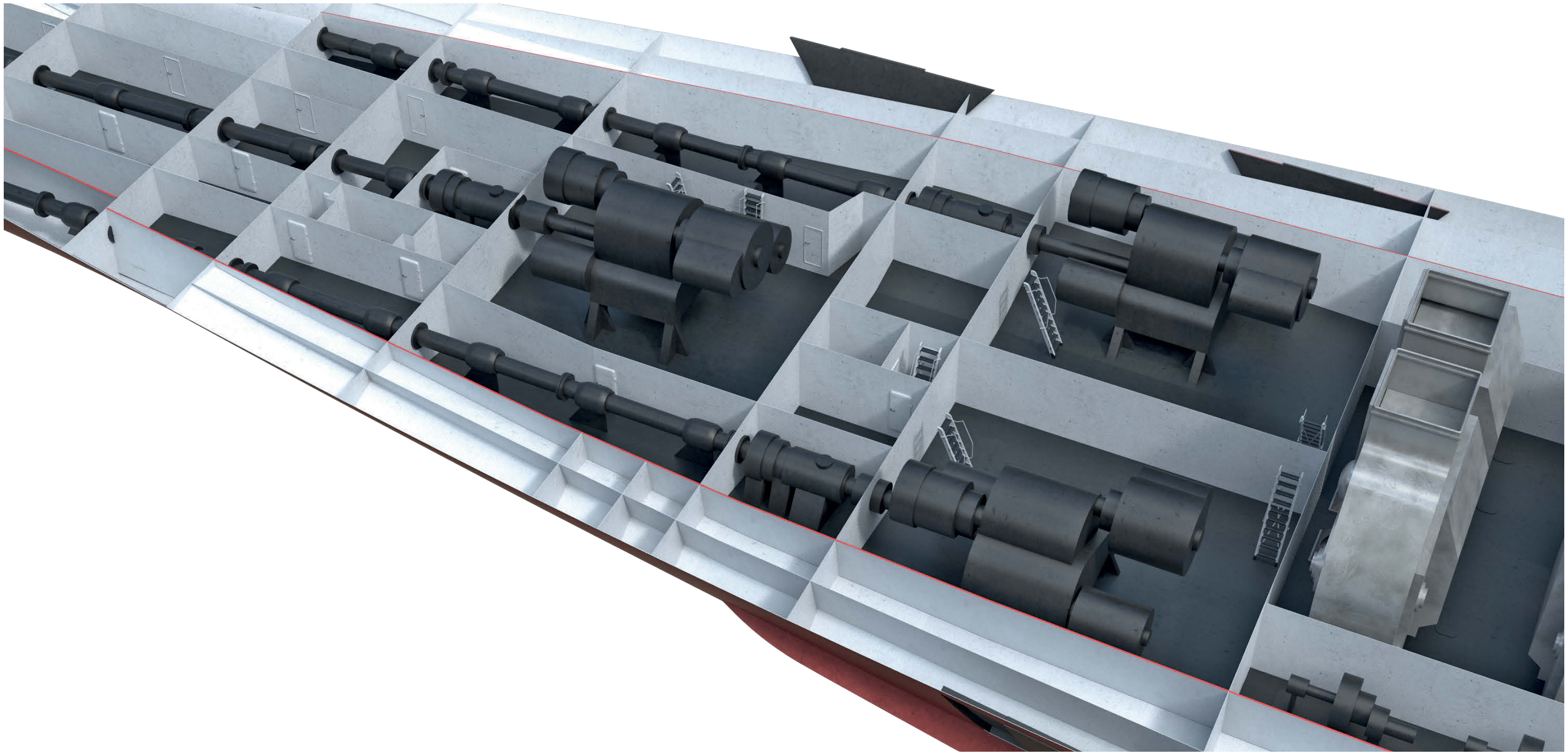

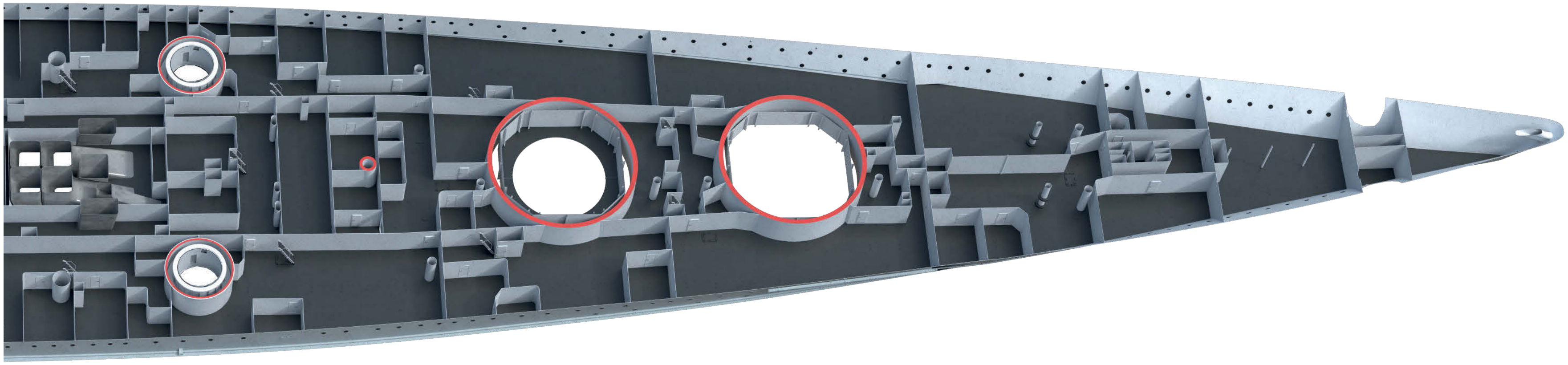

B2/3 INTERMEDIATE DECK/ARMOUR DECK (*ZWISCHENDECK/PANZERDECK*)

1 Smoke generator room
2 Cabin for two NCOs
3 Cabin for one NCO
4 NCOs' mess
5 NCO's pantry
6 Cabin for three NCOs
7 Crew's living space
8 Vent room
9 Hammock storage room
10 Printing room
11 Printing workshop
12 Battery stowage room
13 Heavy artillery central
14 Machine workshop
15 Workshop storage room
16 Pump room
17 Forge
18 Welding shop
19 Artillery workshop
20 Artillery workshop storage room
21 Storage room
22 Music instruments storage room
23 Gas protection storage roo
24 Crew's living space/emergency room for the wounded
25 Vent workshop
26 Pump storage room
27 Chain locker
28 Awning storage room

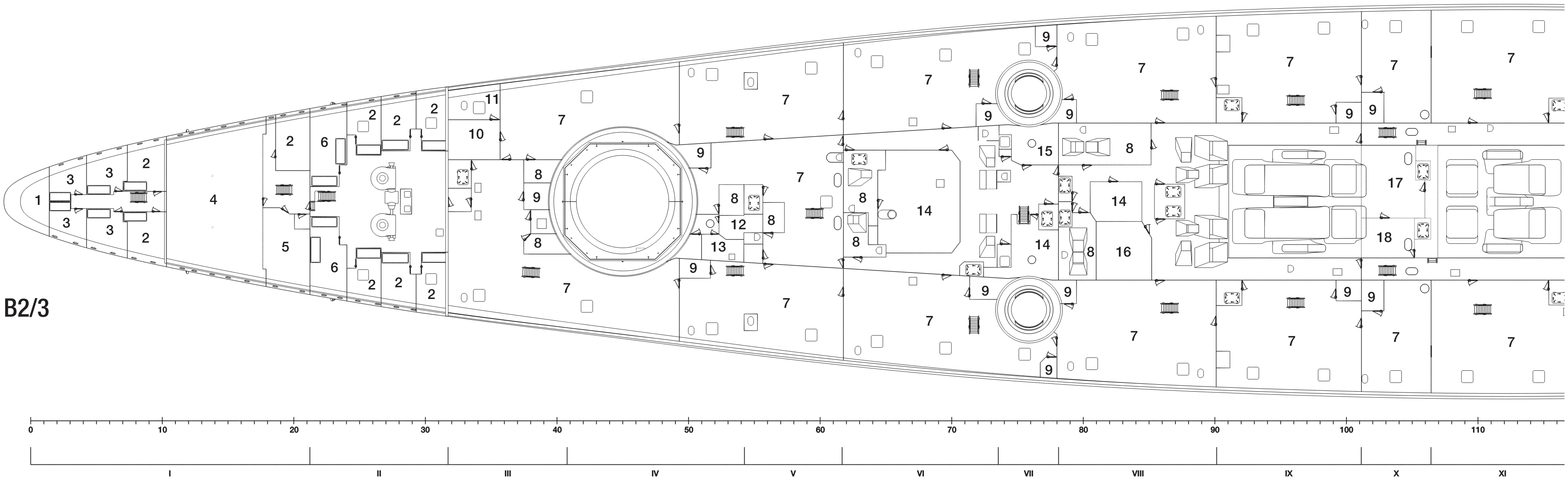

B2/3

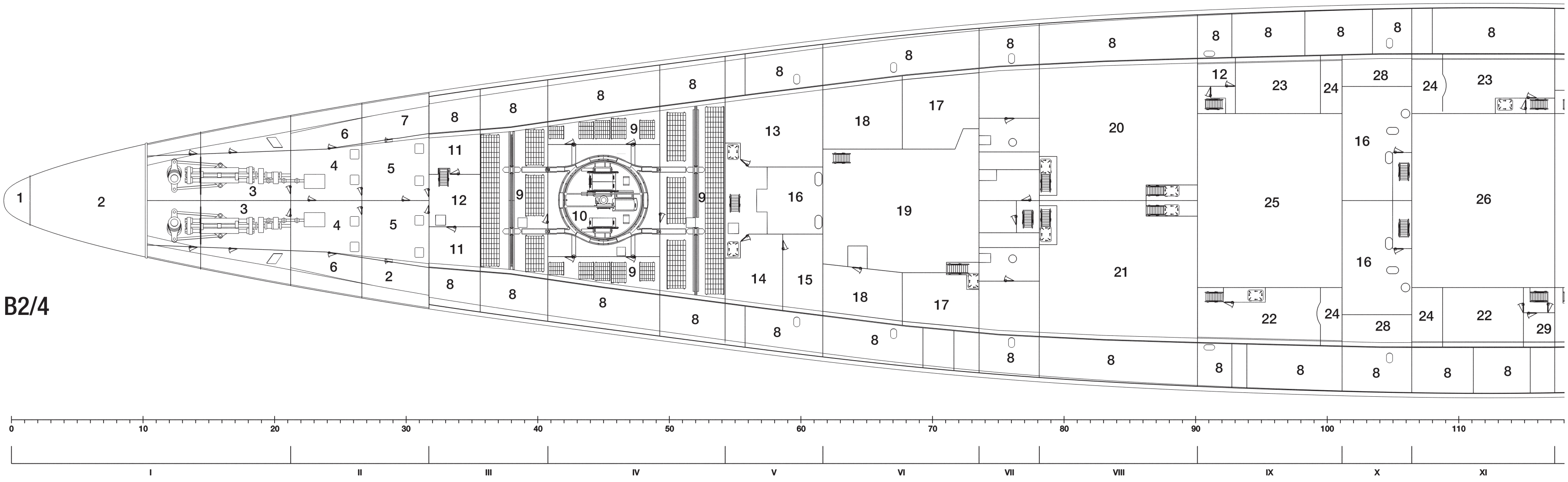

B2/4

B2/4 UPPER PLATFORM DECK (*OBERES PLATTFORMDECK*)

1 Smoke generator room
2 NCO's store room
3 Rudder gear room
4 Rudder drive room
5 Manual steering room
6 Officer's store room
7 Admiral's store room
8 Storage space above the armoured deck slopes
9 28cm propellant magazine
10 Propellant handling level
11 Bread storage room
12 Vent room
13 Aft artillery plotting room
14 Aft AA artillery plotting room
15 Aft AA artillery switchboard room
16 10.5cm ammunition magazine
17 15cm ammunition magazine
18 15cm ammunition handling room
19 Turbine room 1 (centre)
20 Turbine room 2 (port)
21 Turbine room 3 (starboard)
22 Evaporator room
23 Electrical generator switchboard room
24 Pipe duct
25 Boiler room 1
26 Boiler room 2
27 Boiler room 3
28 Pipe and cable duct
29 Hot water processing room
30 Boiler command post
31 Emergency switchboard room
32 Map and instrument storage room
33 Radio room
34 Rectifier for radio room
35 Combat first aid station
36 Reserve combat first aid station
37 Command station
38 Carpenter's storage room
39 Paint storage room
40 Detention cell
41 Capstan drive room
42 Hammock storage room
43 Chain box
44 Crew's living space
45 Awning storage room

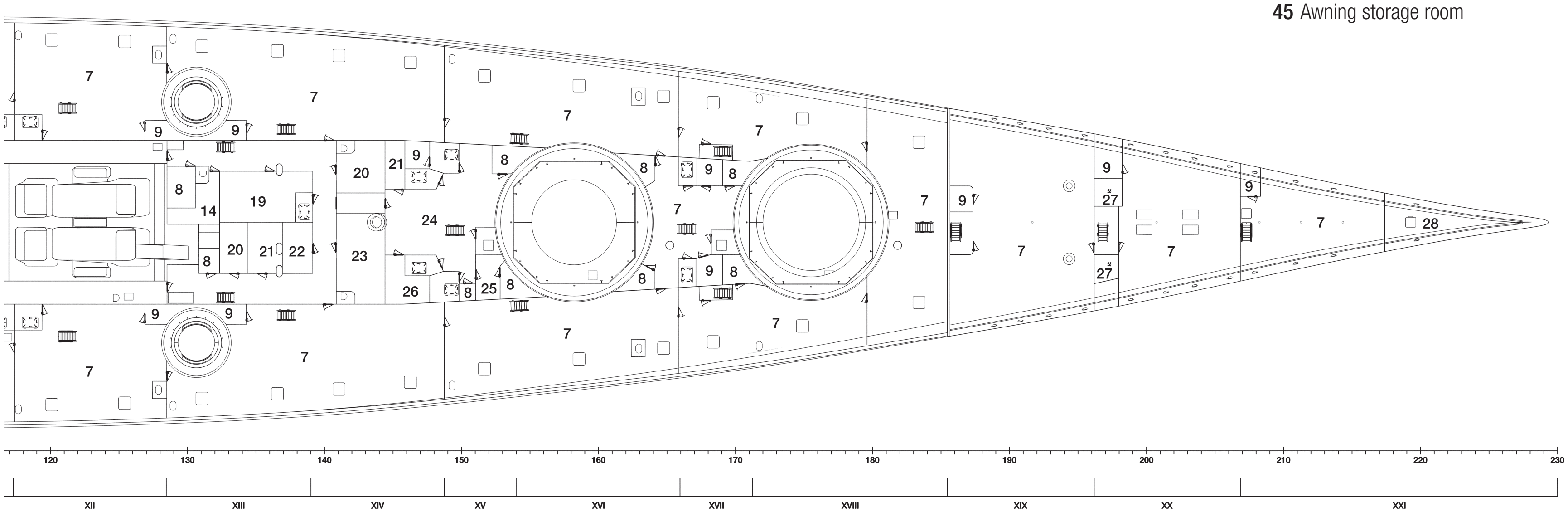

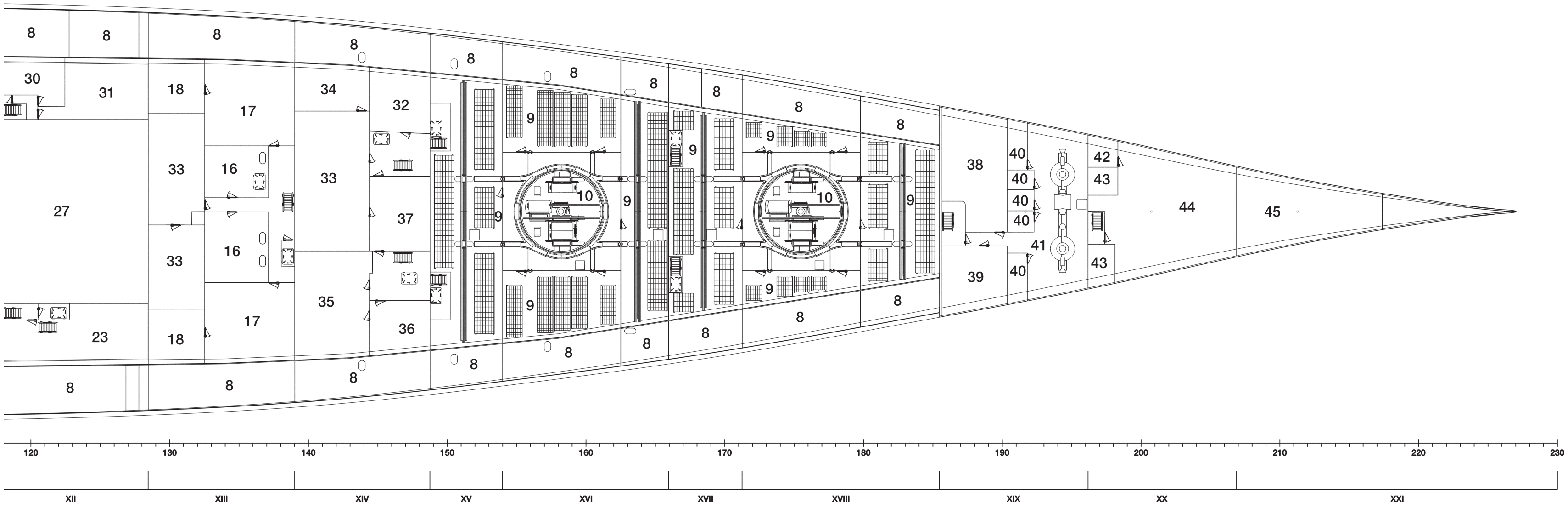

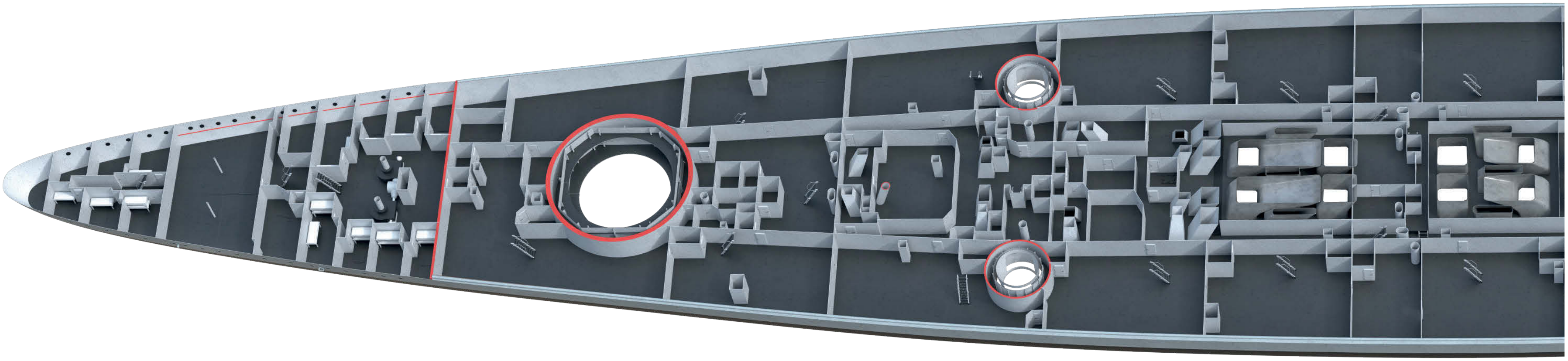

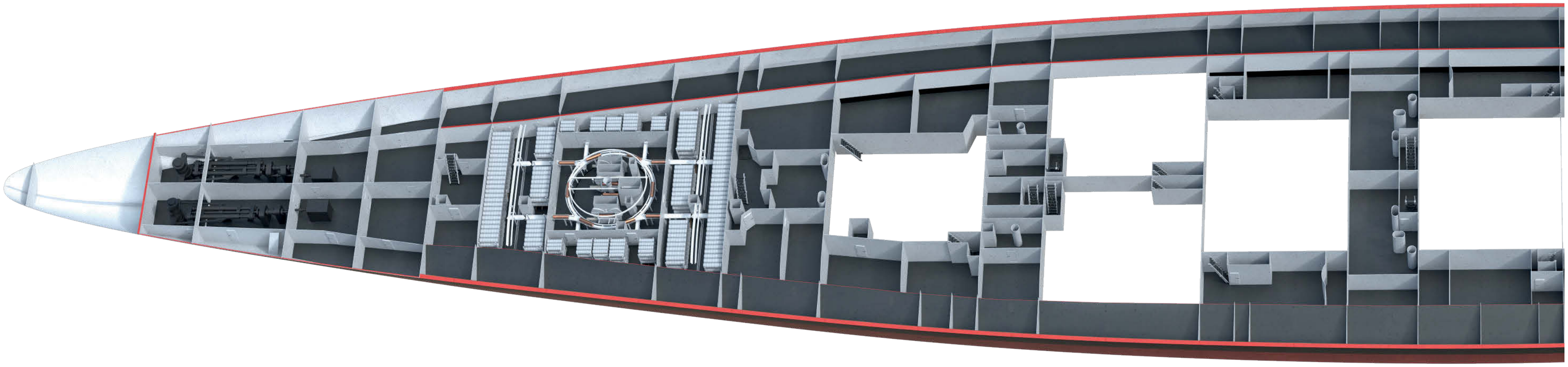

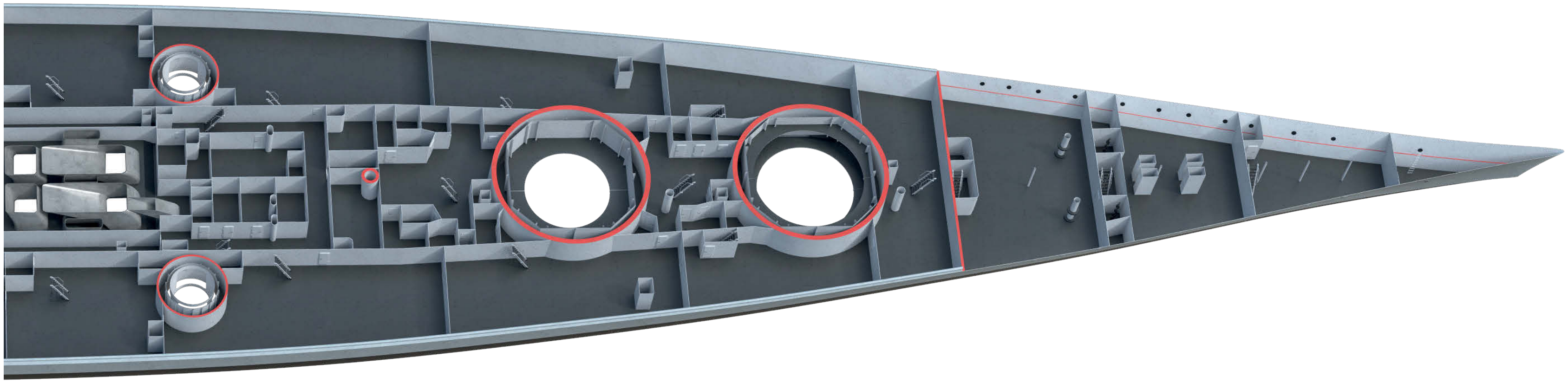

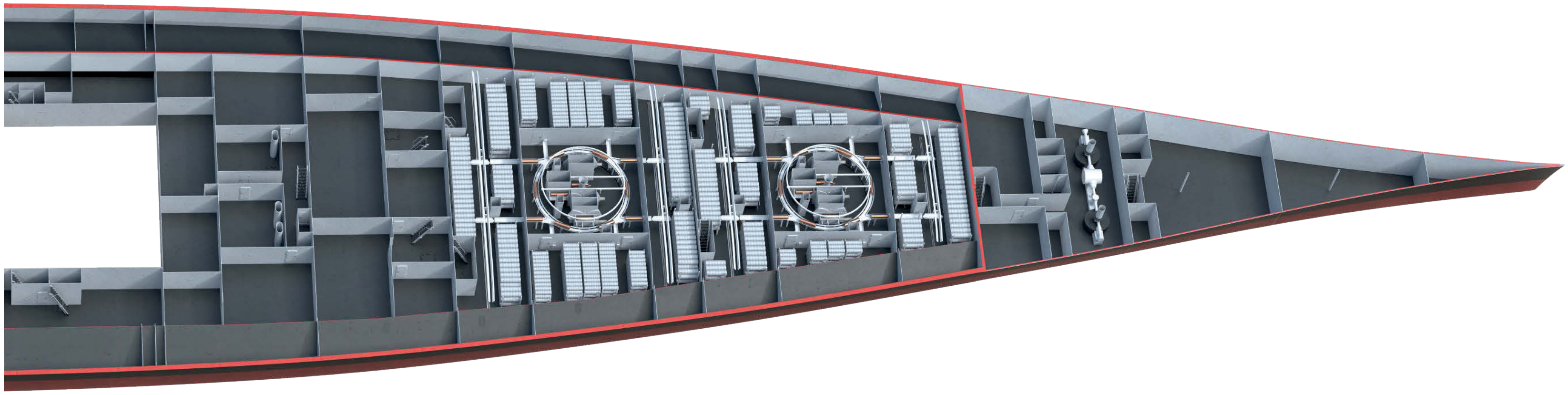

B2/5 MIDDLE PLATFORM DECK (*MITTLERES PLATTFORMDECK*)

1 Trim tank
2 Commander's store room
3 Officer's store room
4 Oil fuel tank
5 Deoiler tank
6 Lubricating oil tank
7 Dry food store room
8 Pump room
9 28cm projectile magazine
10 Meat storage room
11 Projectile handling level
12 Artillery storage room
13 3.7cm ammunition magazine
14 Artillery secondary switchboard room
15 Aft artillery amplification room
16 Aft converter room
17 Aft gyro room
18 Switchboard room
19 Aft artillery reserve switchboard room
20 Electrical generator room 1
21 Electrical generator room 2
22 Electrical generator room 3
23 Electrical generator room 4
24 Electrical generator room 5
25 Turbine room 1 (centre)
26 Turbine room 2 (port)
27 Turbine room 3 (starboard)
28 Boiler room 1
29 Boiler room 2
30 Boiler room 3
31 Fresh water apparatus
32 15cm ammunition magazine
33 10.5cm ammunition magazine
34 Auxiliary machinery room
35 Auxiliary boiler room
36 Aft regulator room
37 Fore regulator room
38 Machinery control room
39 Artillery main switchboard room
40 Fore artillery plotting room
41 Fore artillery amplification room
42 Fore AA artillery switchboard room
43 Fore AA artillery plotting room
44 Storage room
45 Uniform store
46 Canteen store
47 28cm propellant magazine
48 Pump room
49 Chain box
50 Reserve oil fuel tank
51 Regulator room

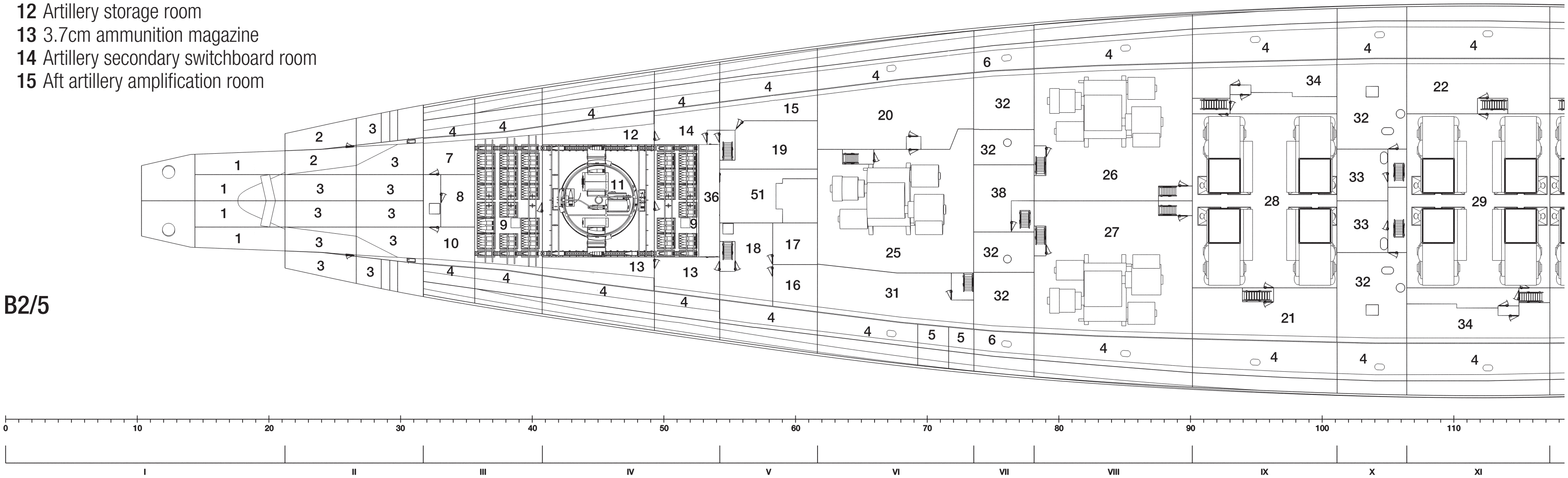

B2/5

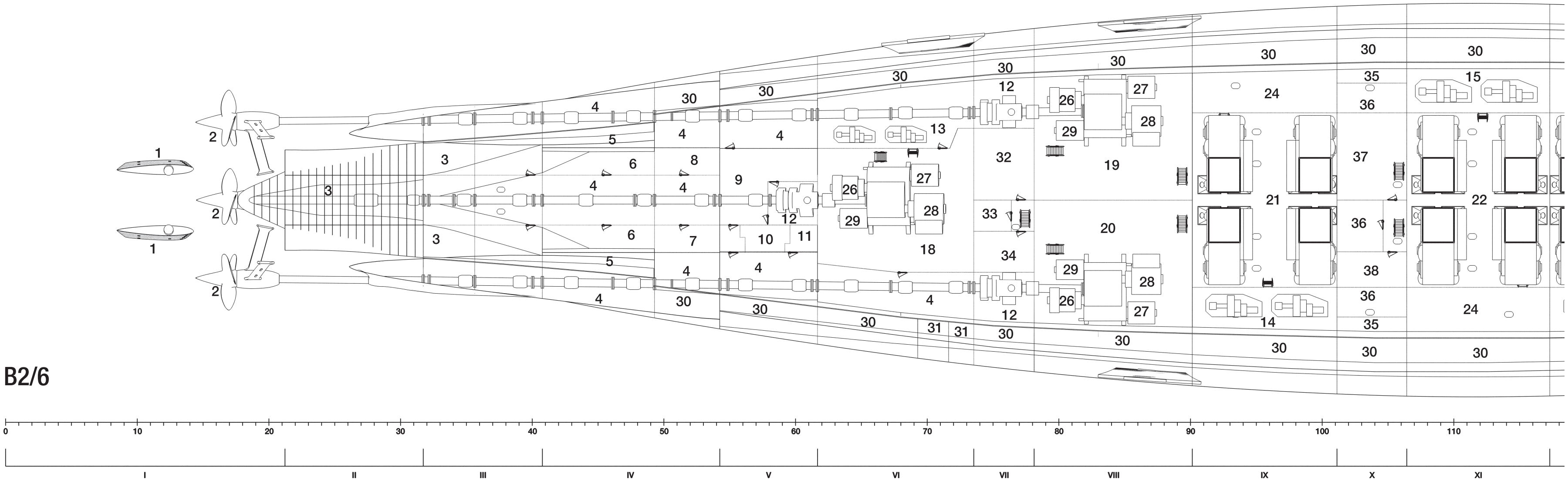

B2/6

B2/6 LOWER PLATFORM DECK (*UNTERES PLATTFORMDECK*)

1Rudder
2 Propeller
3 Trim tank
4 Propeller shaft tunnel
5 Fresh water tank
6 Machinery storage room
7 Artillery storage room
8 Electrical equipment storage room
9 Oil fuel pump room
10 Bilge pump room
11 Fresh water pump room
12 Thrust bearing
13 Electrical generator room 1
14 Electrical generator room 2
15 Electrical generator room 3
16 Electrical generator room 4
17 Electrical generator room 5
18 Turbine room 1 (centre)
19 Turbine room 2 (port)
20 Turbine room 3 (starboard)
21 Boiler room 1
22 Boiler room 2
23 Boiler room 3
24 Auxiliary machinery room
25 Auxiliary boiler room
26 High pressure turbine
27 Intermediate pressure turbine
28 Low pressure turbine
29 Cruising turbine
30 Fuel oil tank
31 Deoiler tank
32 Cooling machinery room
33 Firearms magazine
34 Reserve radio room
35 Cable duct
36 10.5cm ammunition magazine
37 Radio room
38 Aircraft ammunition magazine
39 Battery workshop
40 3.7cm ammunition magazine
41 Regulator room
42 Switchboard room
43 Bosun's store room
44 Air cooler room
45 Gyro room
46 Storage room
47 Flammable material storage room
48 Meat storage room
49 Cold storage room
50 Dry food store room
51 Fireworks storage room
52 Explosives storage room
53 Hydrophone room
54 Reserve fuel oil tank
55 Chain locker

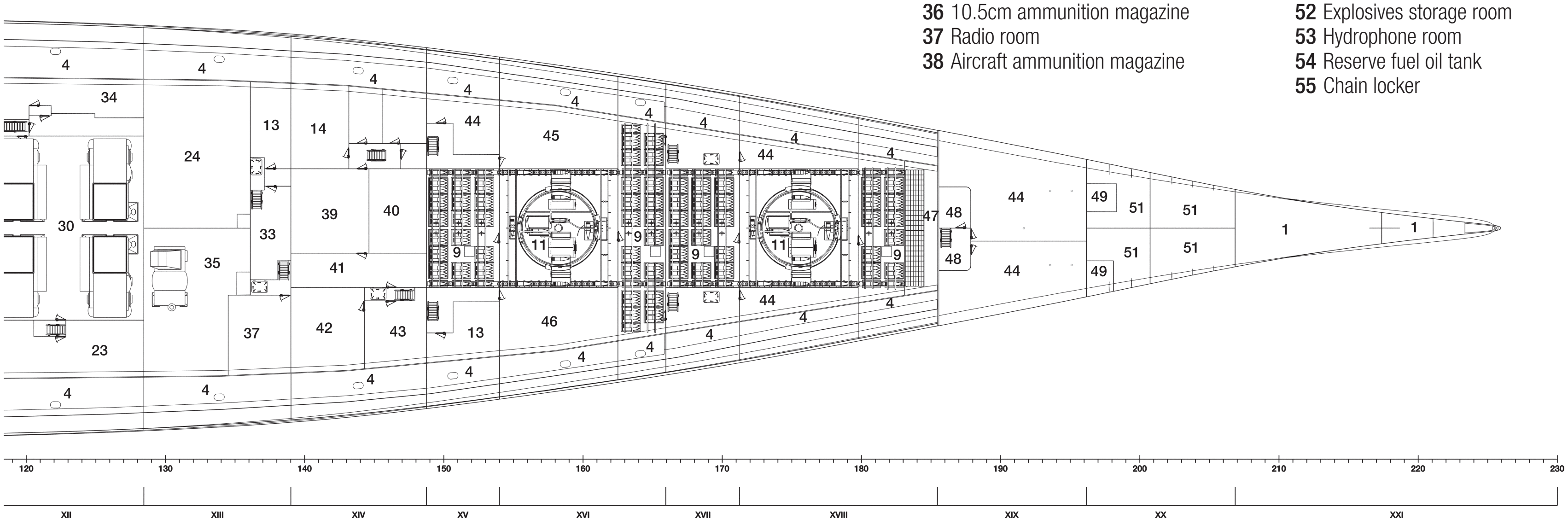

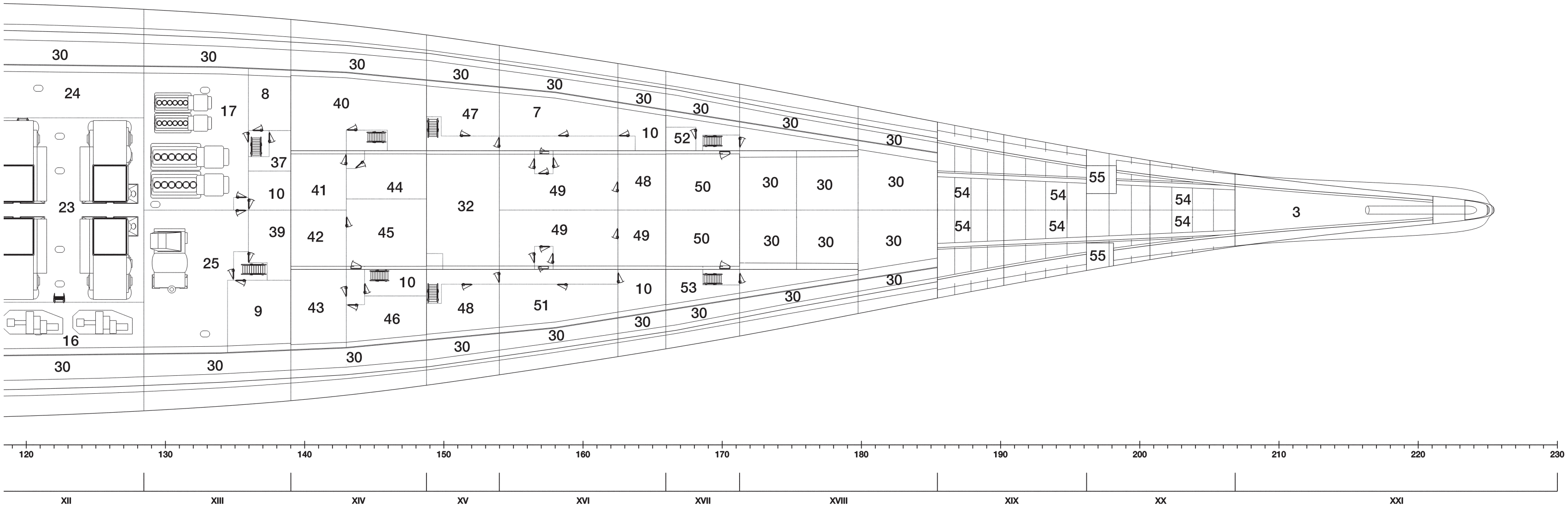

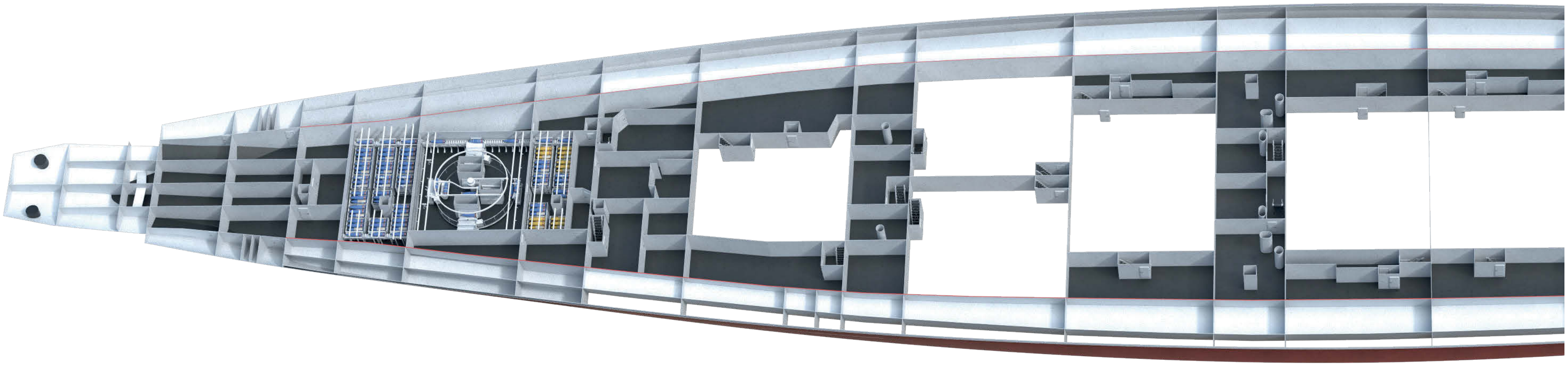

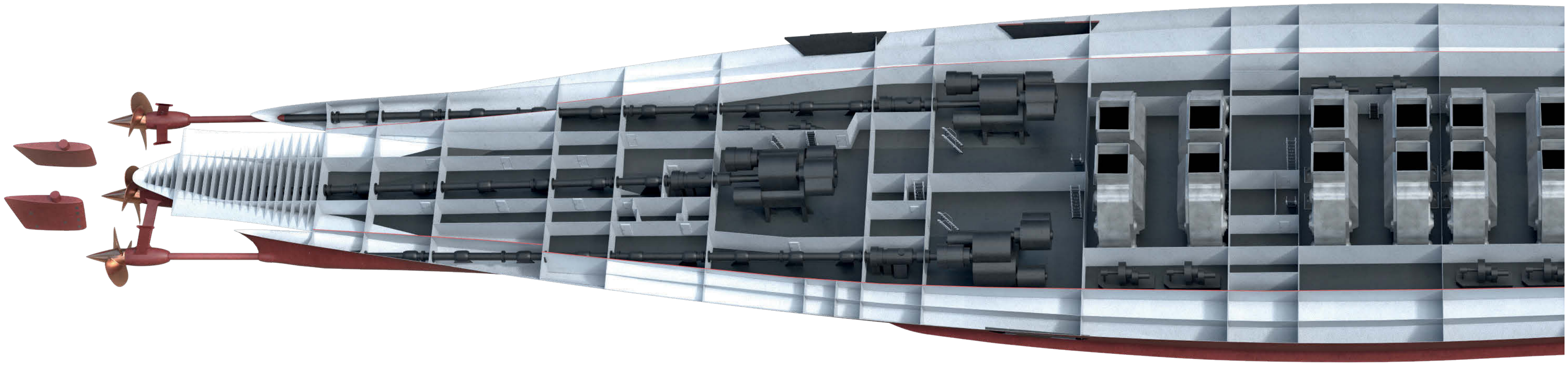

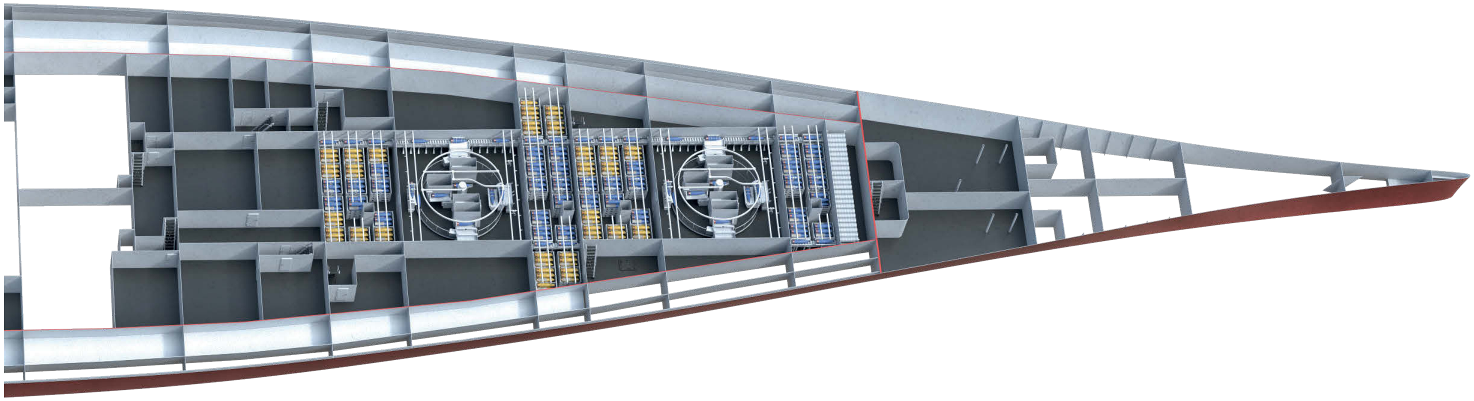

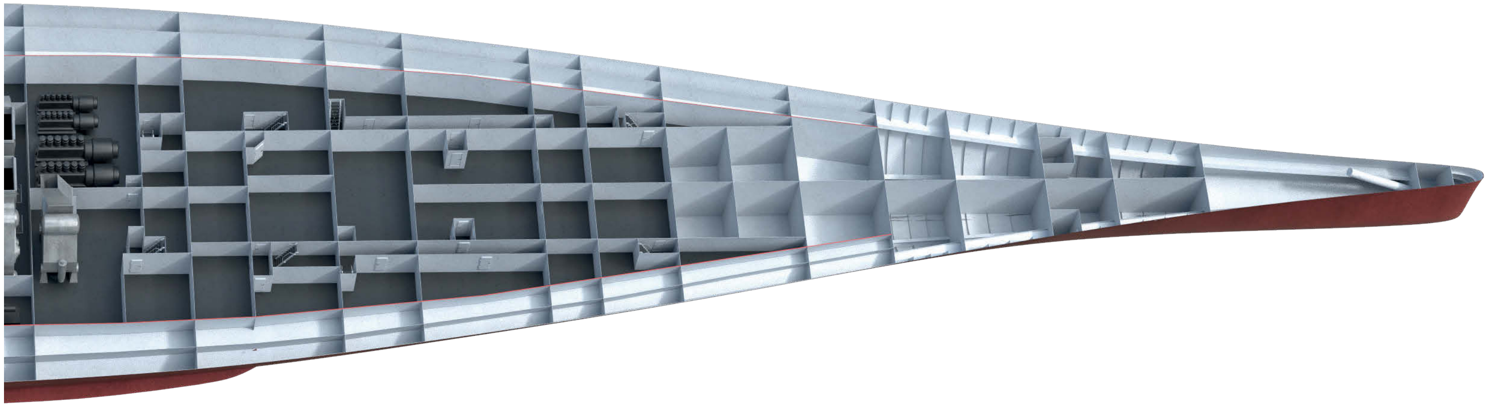

TRANSVERSE SECTIONS (1/400 SCALE)

B3/1 FRAME 5 LOOKING FORWARD
B3/2 FRAME 12 LOOKING FORWARD
B3/3 FRAME 20 LOOKING FORWARD
B3/4 FRAME 27 LOOKING FORWARD
B3/5 FRAME 37 LOOKING FORWARD

B3/1 B3/2 B3/3 B3/4 B3/5

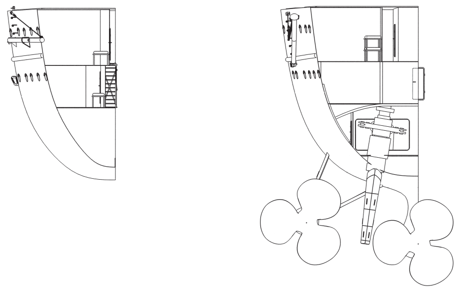

B3/6 FRAME 45 LOOKING FORWARD
B3/7 FRAME 57 LOOKING FORWARD
B3/8 FRAME 68 LOOKING FORWARD
B3/9 FRAME 76 LOOKING FORWARD
B3/10 FRAME 83 LOOKING FORWARD

B3/6

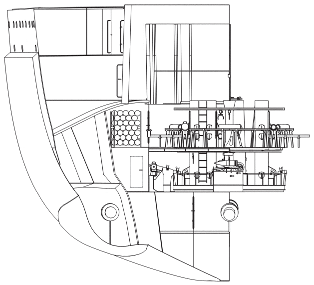

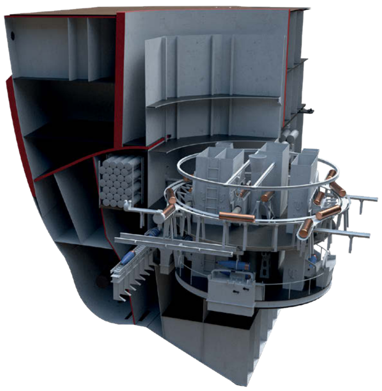

B3/7

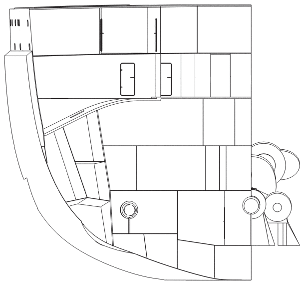

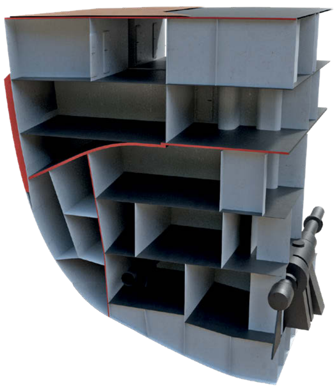

B3/8

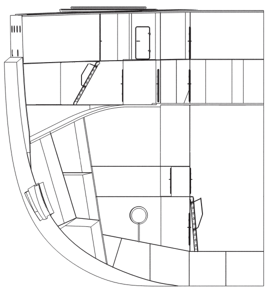

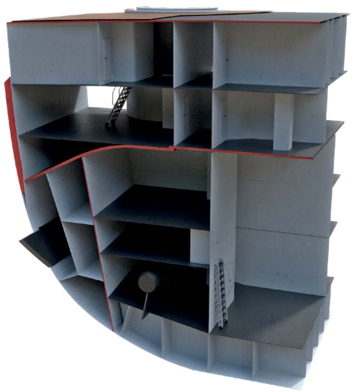

B3/9

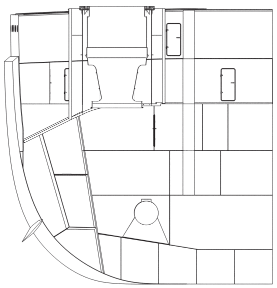

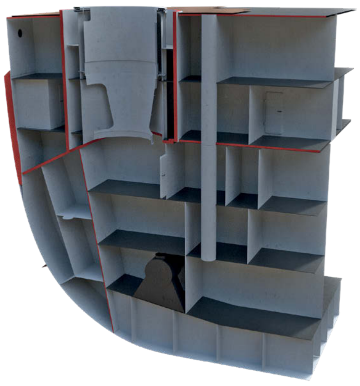

TRANSVERSE SECTIONS (1/400 SCALE)

B3/10 FRAME 83 LOOKING FORWARD
B3/11 FRAME 98 LOOKING FORWARD
B3/12 FRAME 104 LOOKING FORWARD
B3/13 FRAME 109 LOOKING FORWARD

B3/10

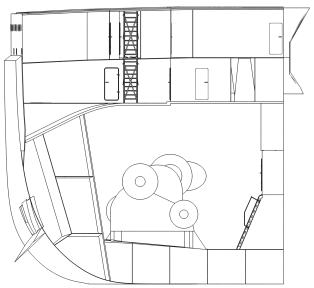

B3/11

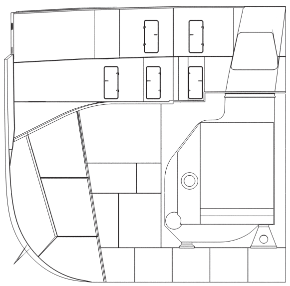

B3/12

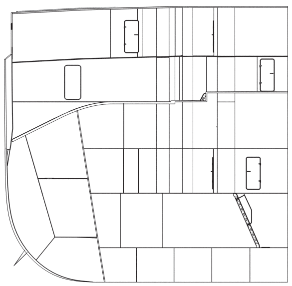

B3/13

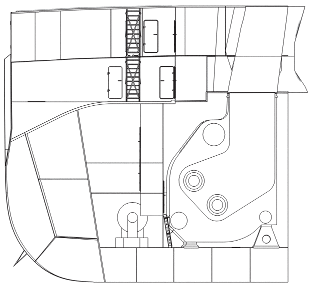

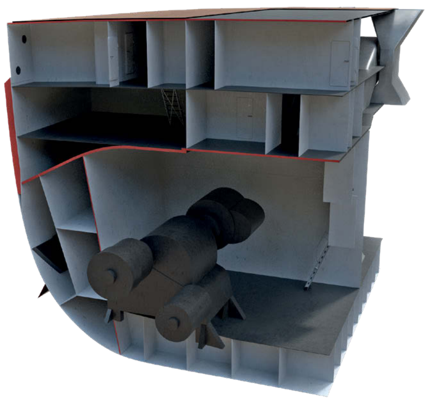

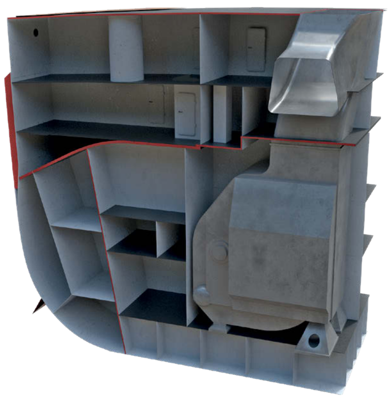

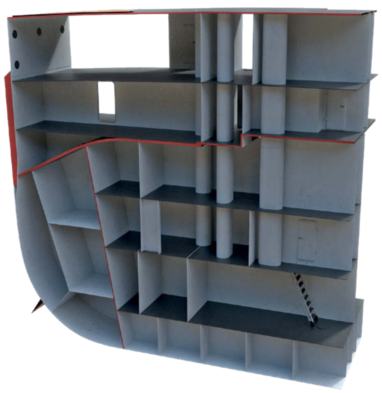

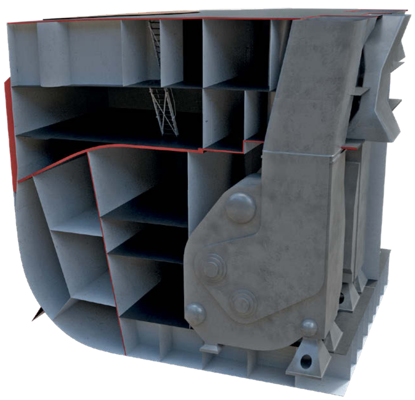

B3/14 FRAME 122 LOOKING AFT
B3/15 FRAME 134 LOOKING AFT
B3/16 FRAME 144 LOOKING AFT
B3/17 FRAME 152 LOOKING AFT

B3/14

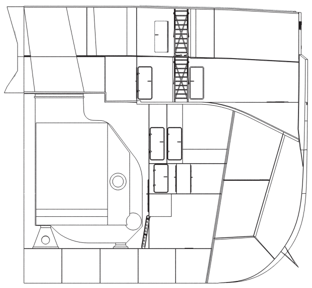

B3/15

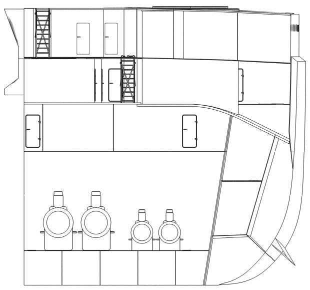

B3/16

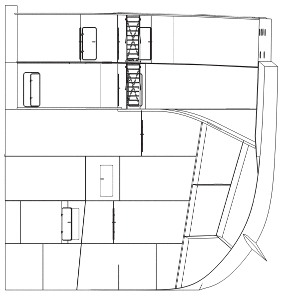

B3/17

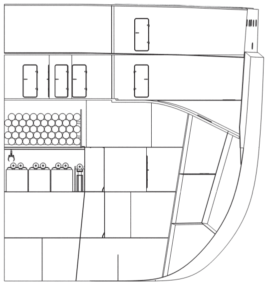

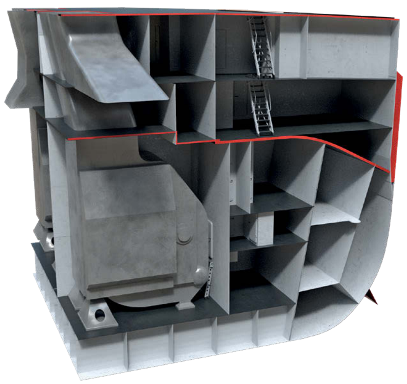

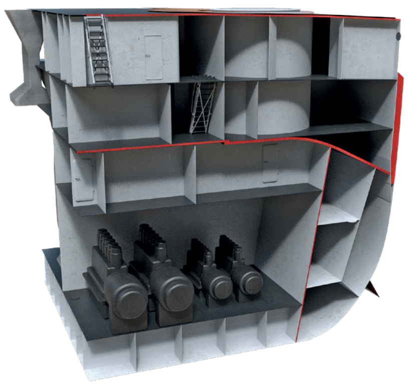

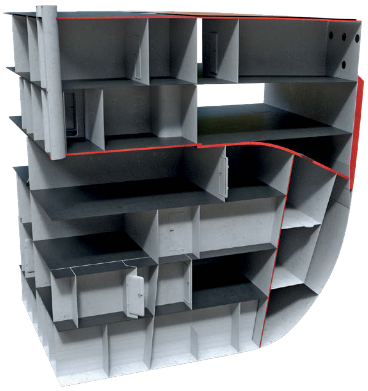

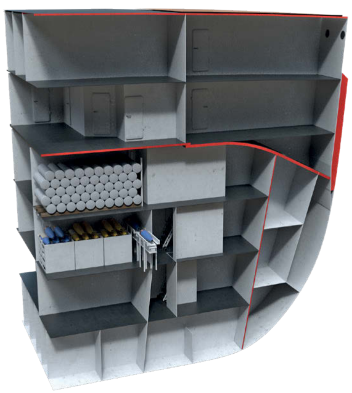

TRANSVERSE SECTIONS (1/400 SCALE)

B3/18 FRAME 158 LOOKING AFT
B3/19 FRAME 167 LOOKING AFT
B3/20 FRAME 175 LOOKING AFT
B3/21 FRAME 185 LOOKING AFT

B3/18

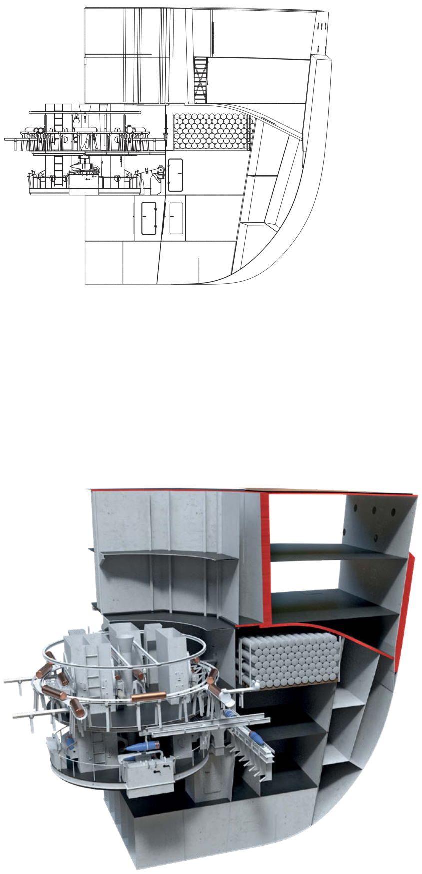

B3/19

B3/20

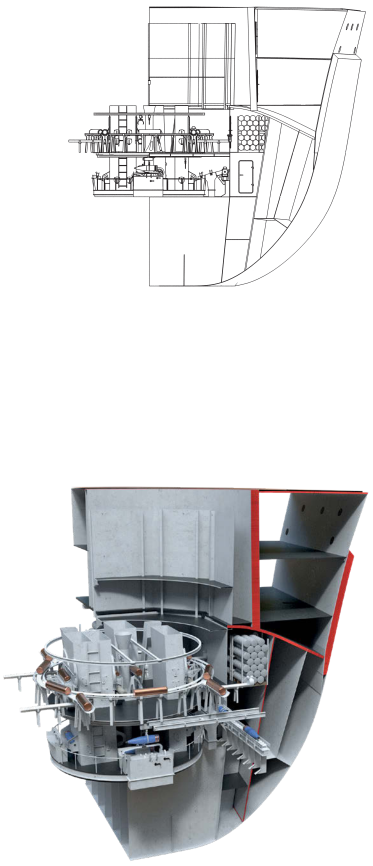

B3/21

B3/22 FRAME 192 LOOKING AFT
B3/23 FRAME 199 LOOKING AFT
B3/24 FRAME 209 LOOKING AFT
B3/25 FRAME 219 LOOKING AFT

B3/22

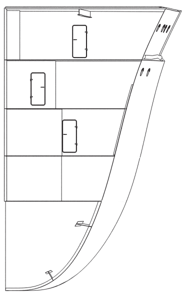

B3/23

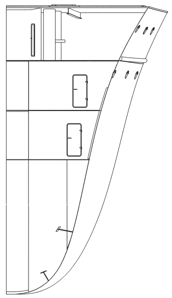

B3/24

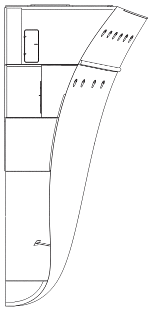

B3/25

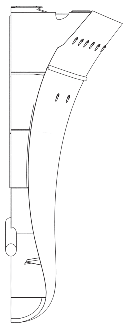

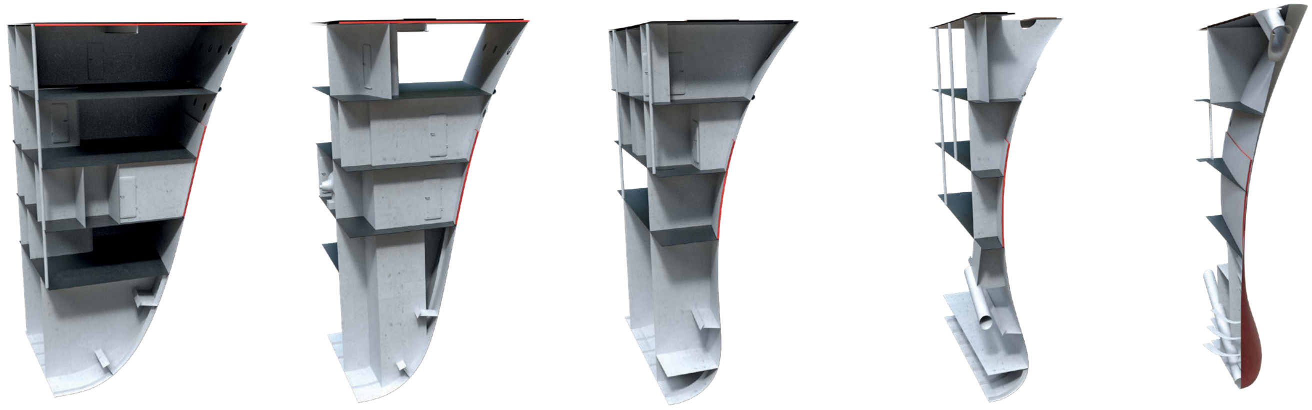

FORE SUPERSTRUCTURE (1/200 SCALE)

C1/1 RIGHT PROFILE, JANUARY 1939

1 Wall vent (moved upwards around mid-1940), starboard side only
2 Small hinged platform (removed in mid-1939), both sides of superstructure
3 Stowed accommodation ladder (on both sides until around mid-1940)

January 1939

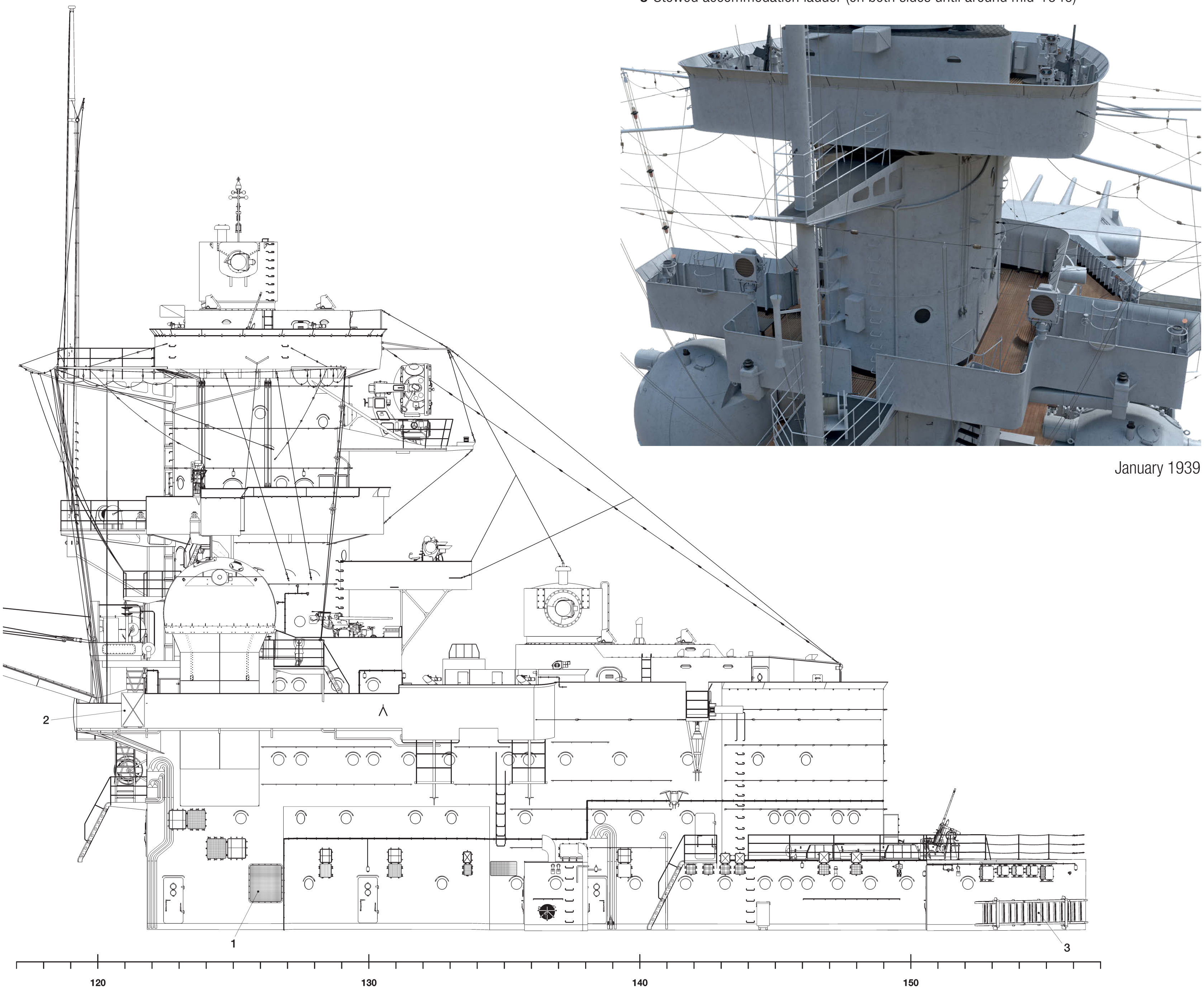

C1/1

C1/2 RIGHT PROFILE, DECEMBER 1943

1 Main deck level (*Oberdeck*)
2 Superstructure deck level (*Aufbaudeck*)
3 Lower bridge deck level (*Unteres Brückendeck*)
4 Bridge deck level (*Brückendeck*)
5 Lower mast deck level (*Unteres Mastdeck*)
6 Upper mast deck level (*Oberes Mastdeck*)
7 Admiral's bridge level (*Admiralsbrücke*)
8 Searchlight deck level (*Scheinwerferdeck*)
9 Foretop level (*Vormars*)
10 Main fire control post roof level (*Decke Haupt Artillerie Leitstand*)

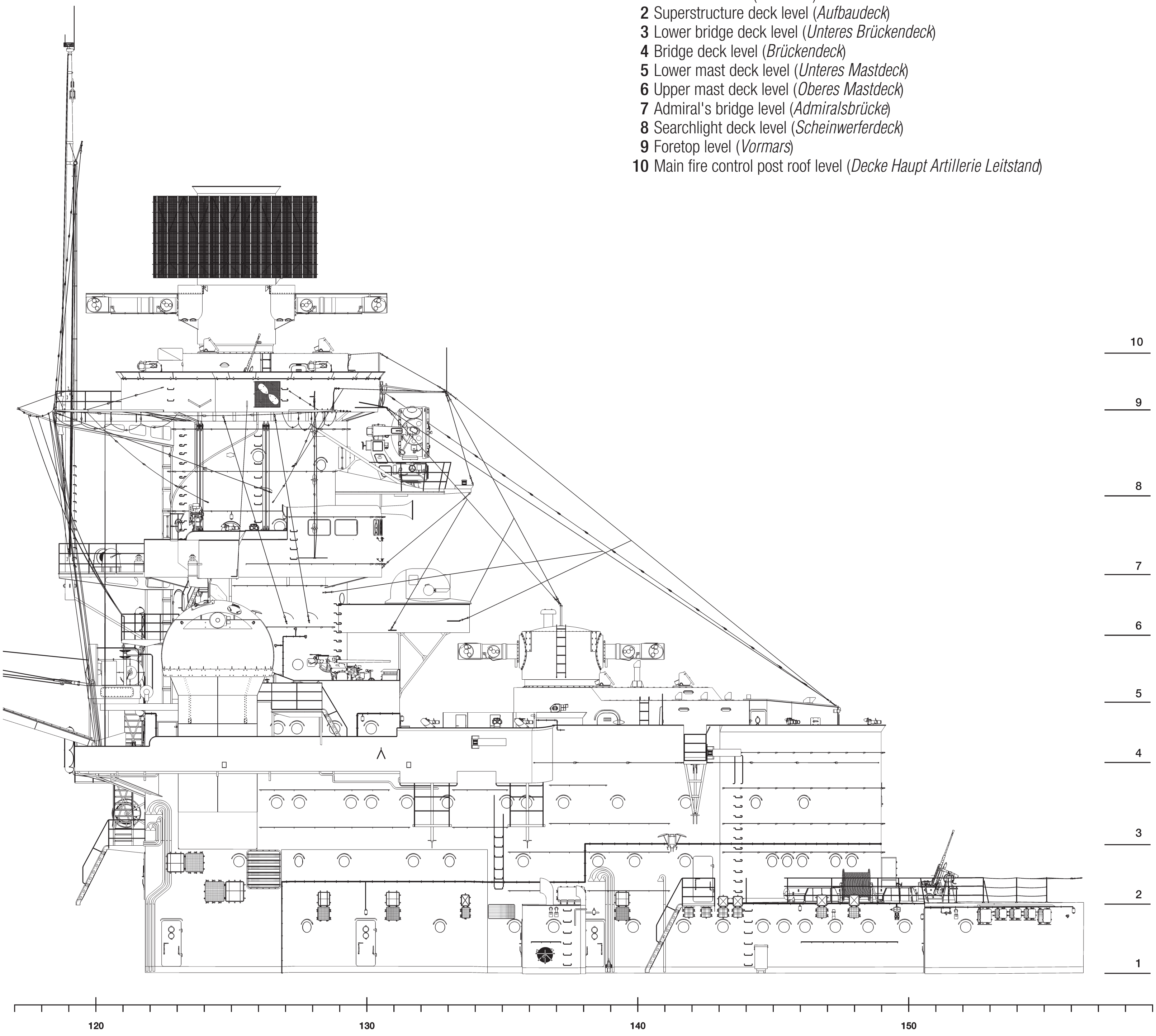

C1/2

January 1939

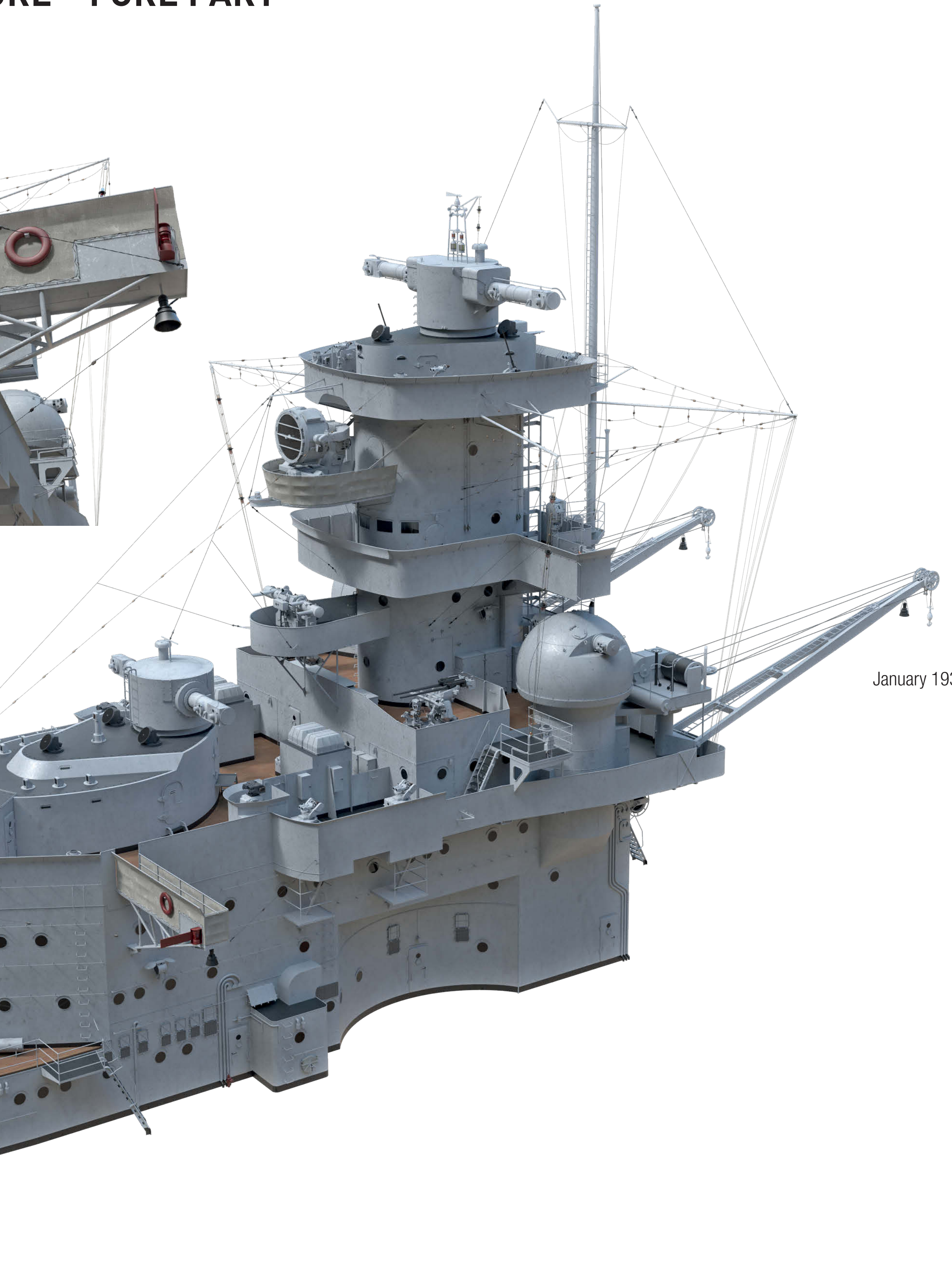

January 1939

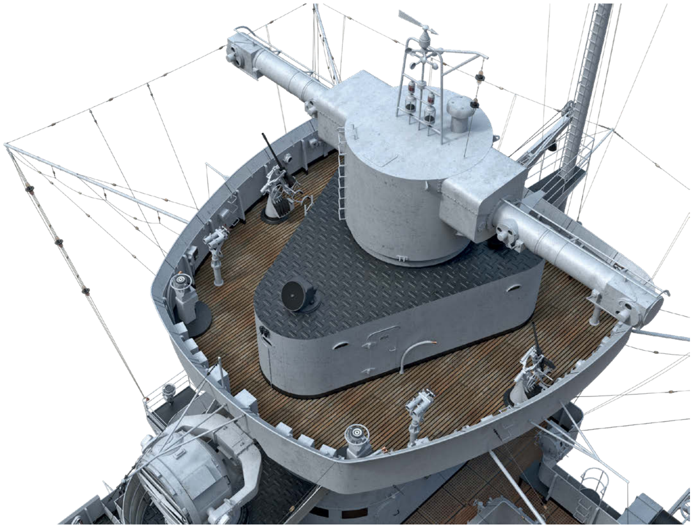

January 1939

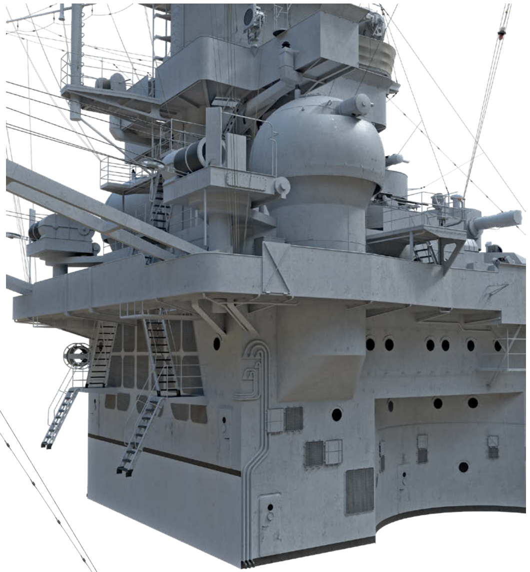

January 1939

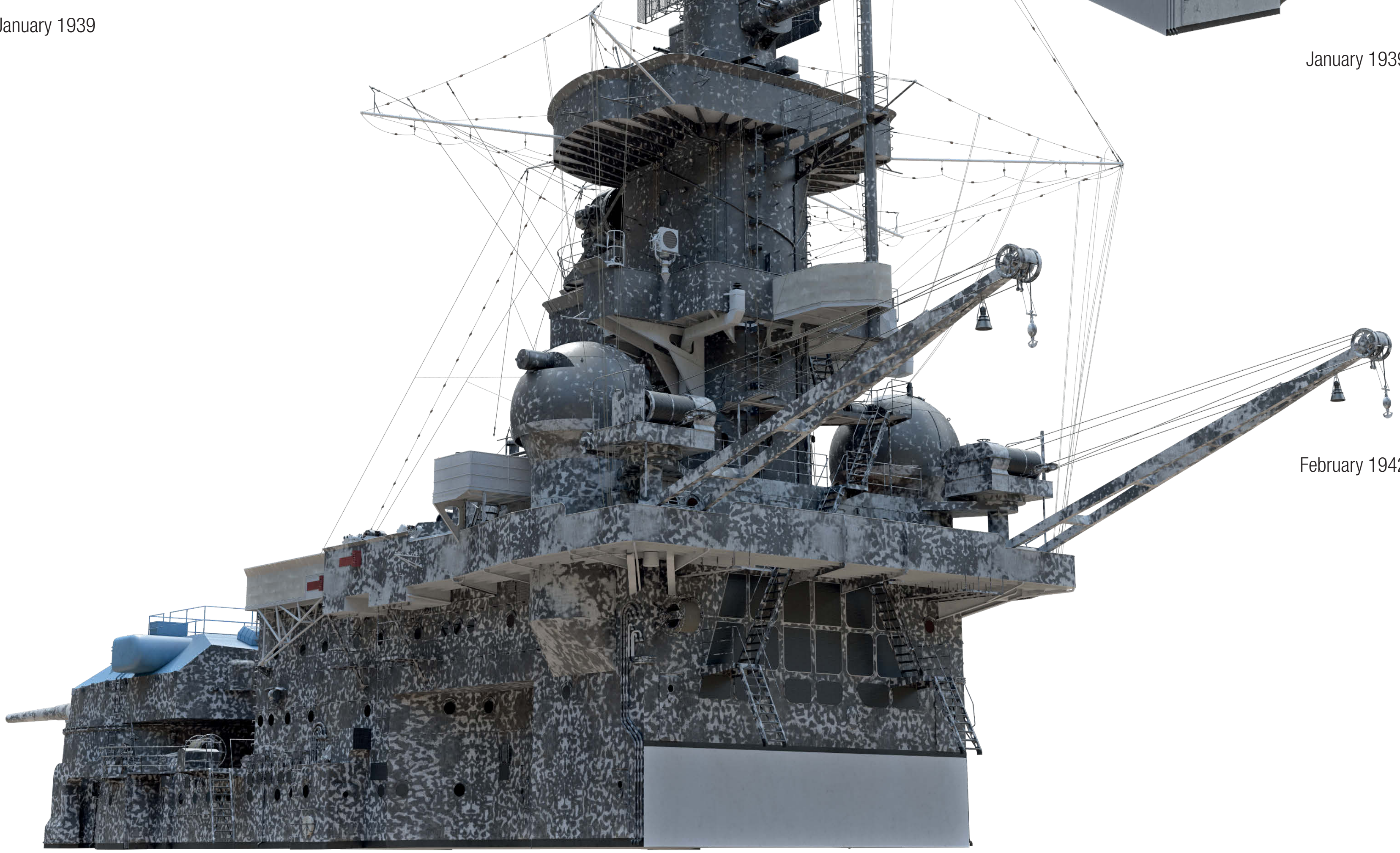

February 1942

FORE SUPERSTRUCTURE (1/200 SCALE)

C1/3 LEFT PROFILE, DECEMBER 1943

April 1940

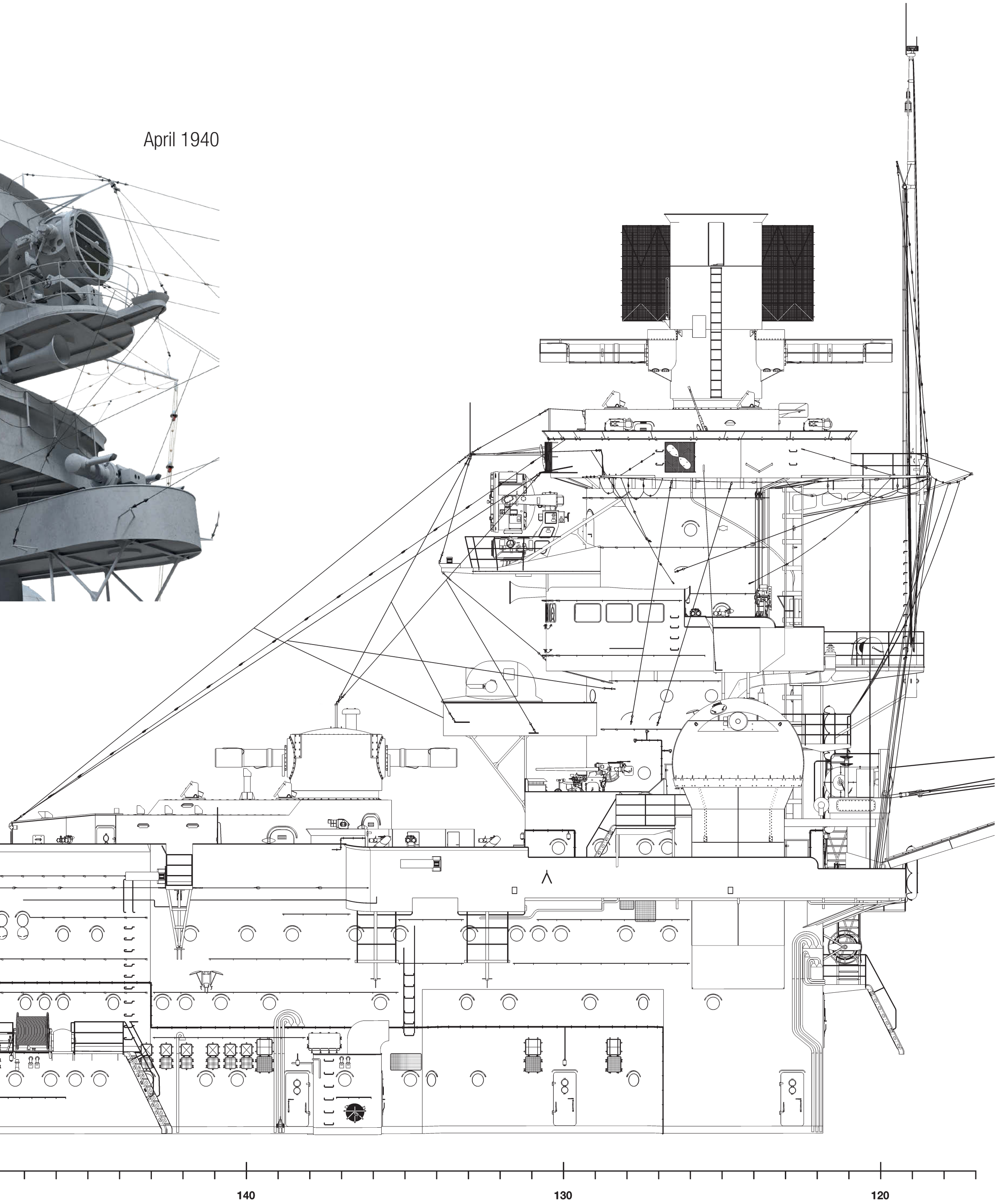

C1/3

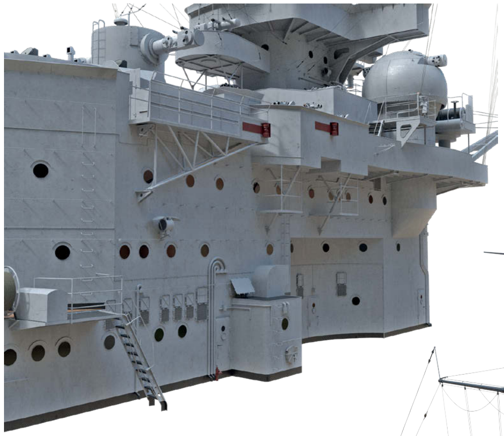
April 1940

February 1942

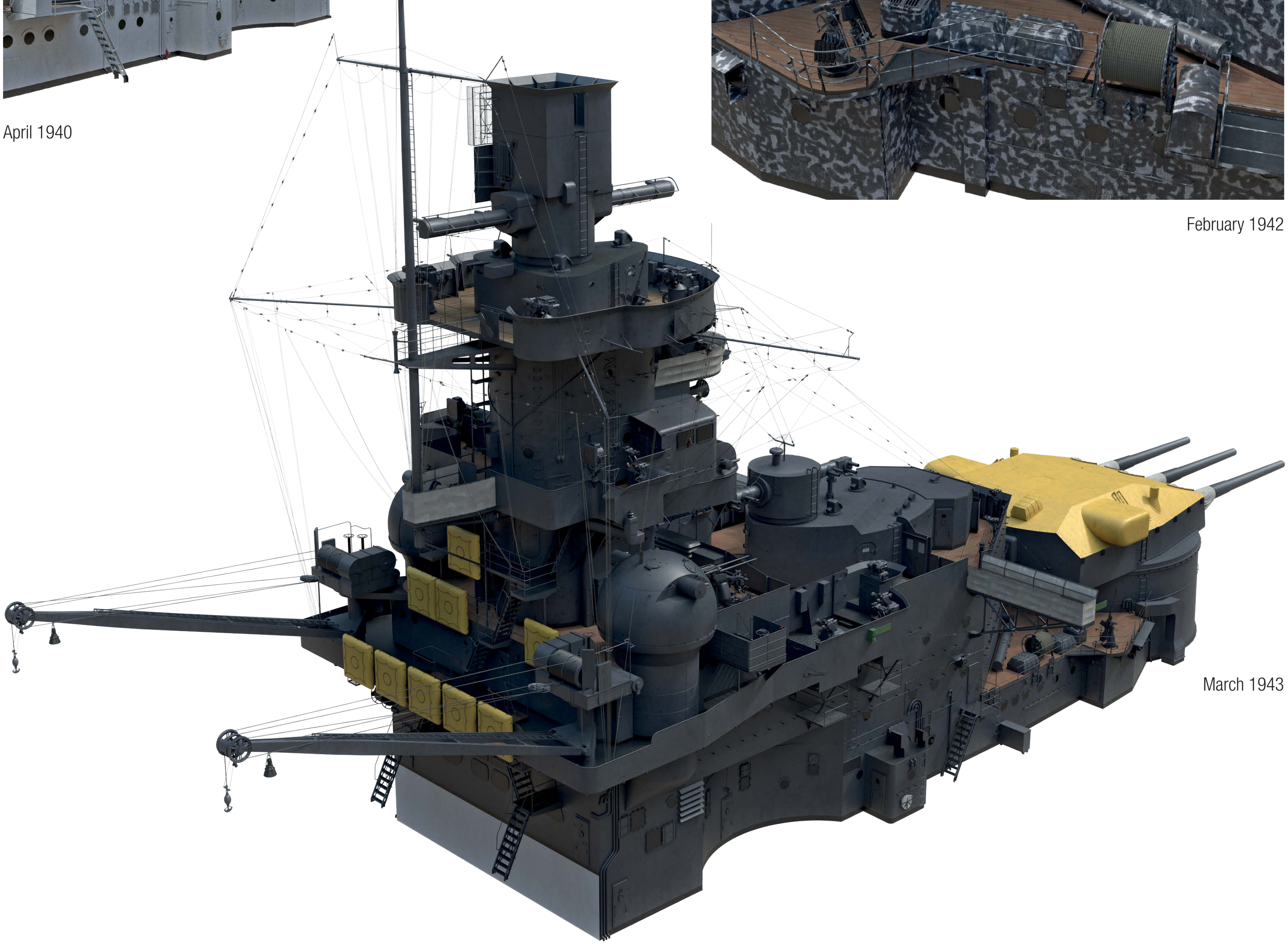
March 1943

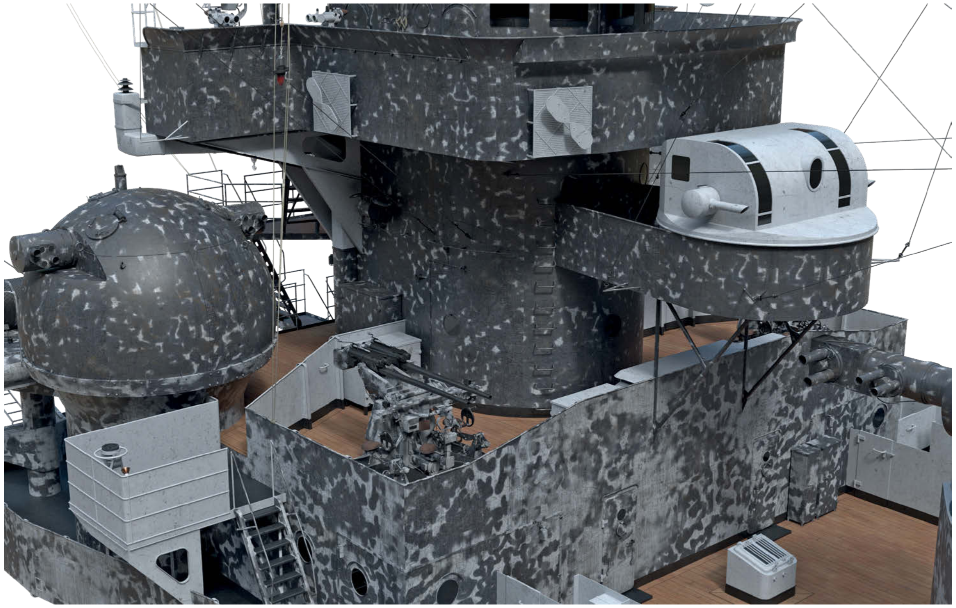

February 1942

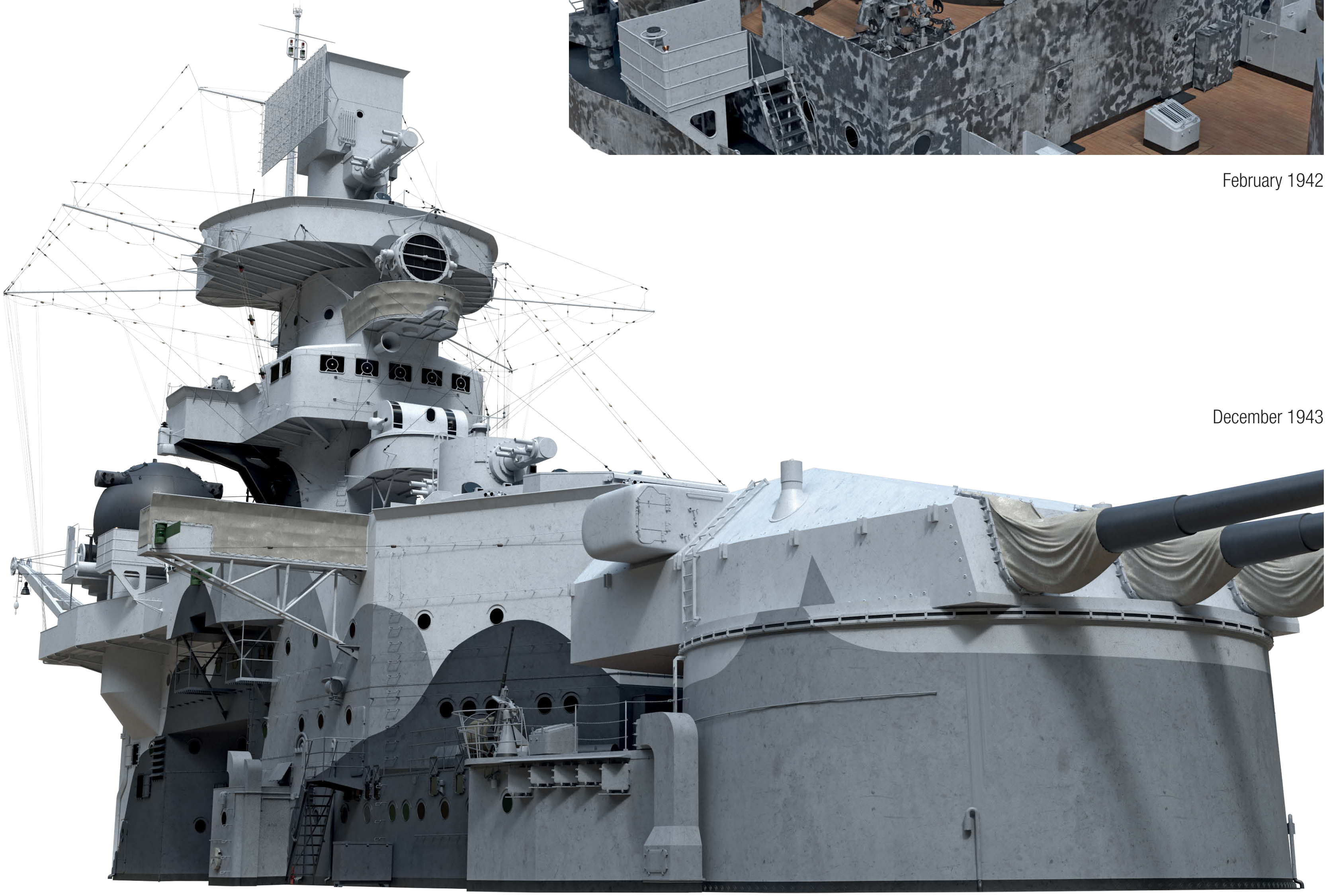

December 1943

February 1942

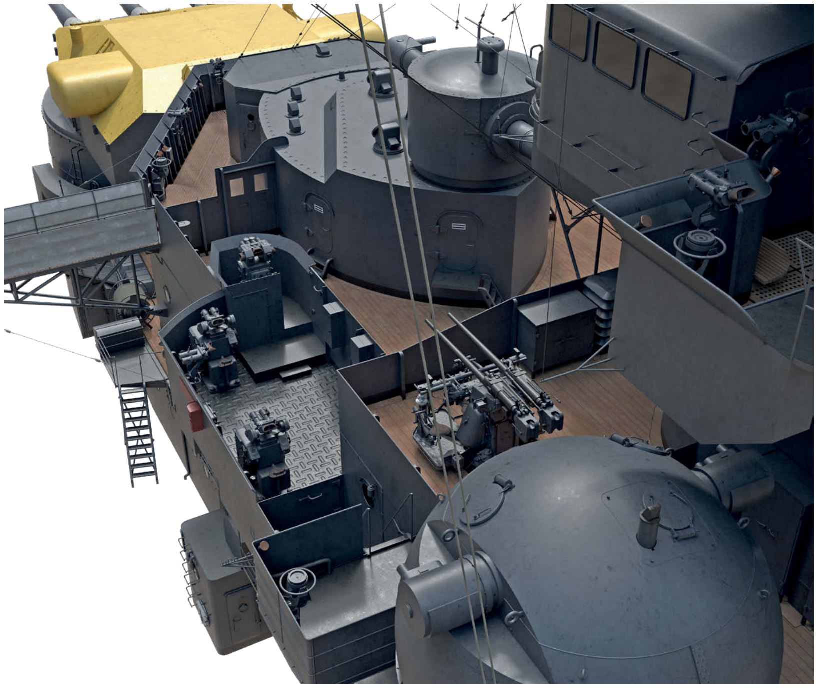

March 1943

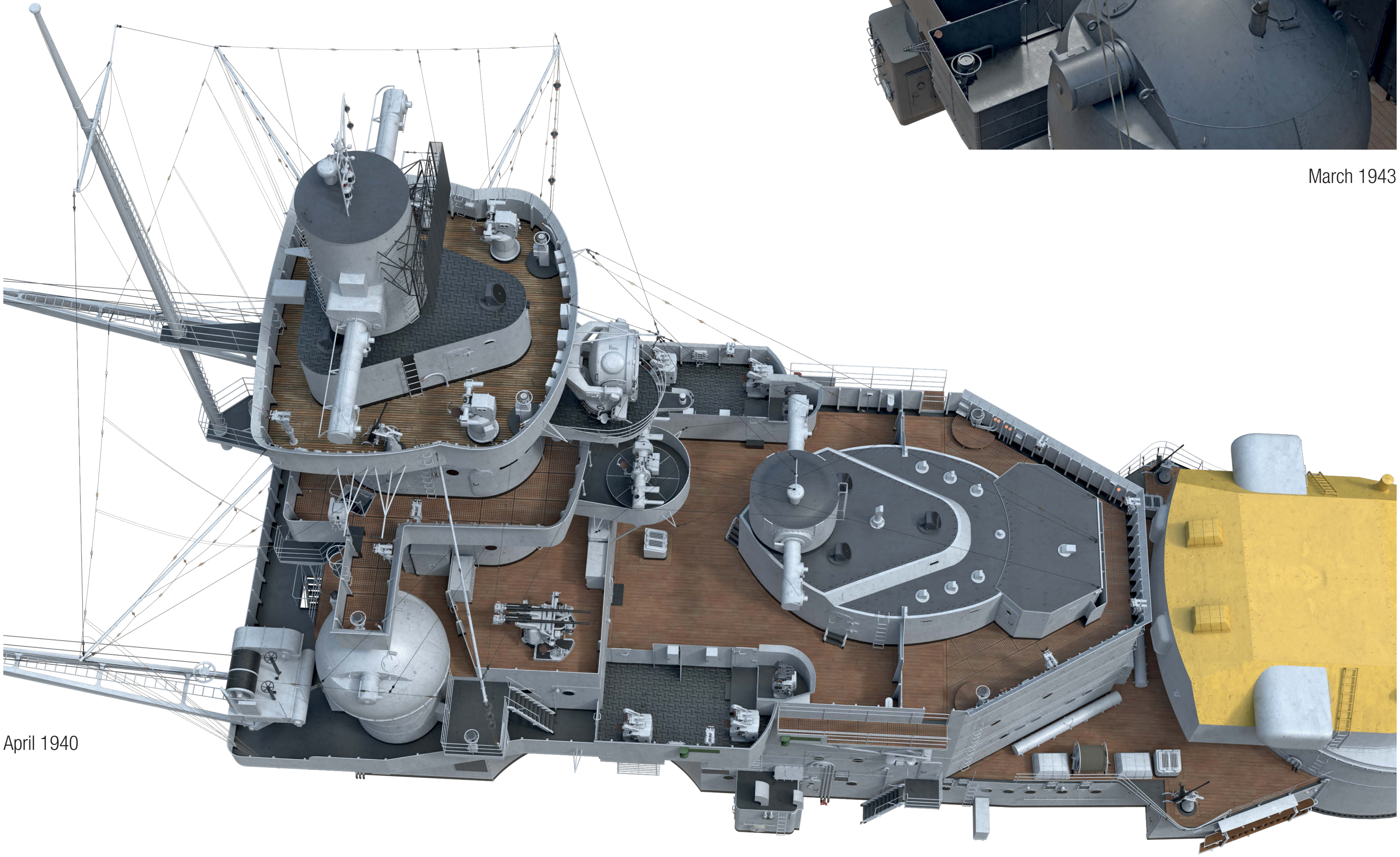

April 1940

FORE SUPERSTRUCTURE (1/200 SCALE)

C1/4 FRONT VIEW, DECEMBER 1943

C1/5 BACK VIEW, DECEMBER 1943

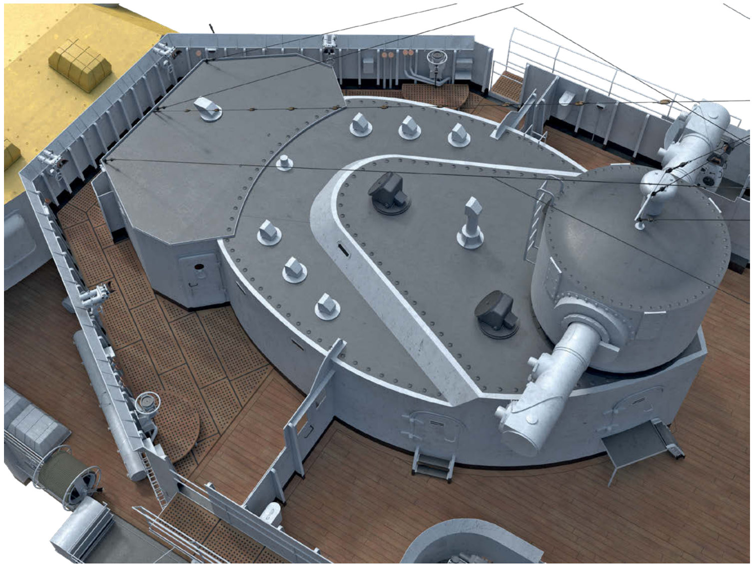

April 1940

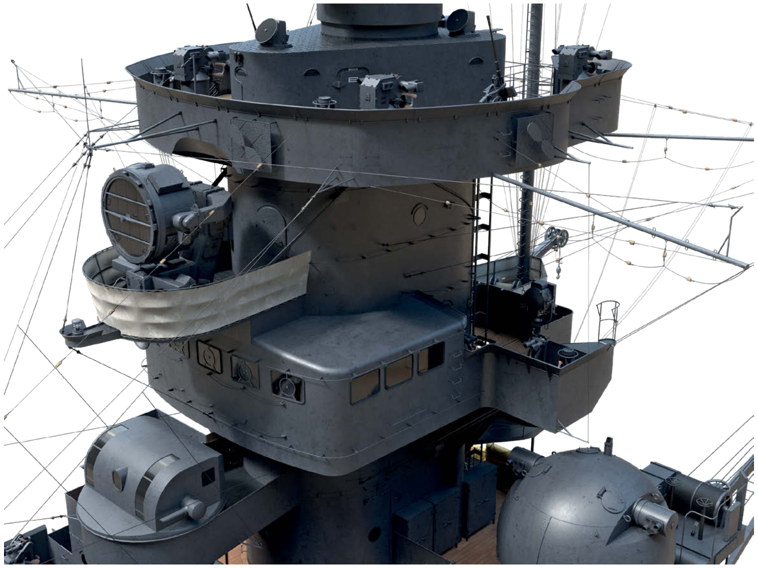

March 1943

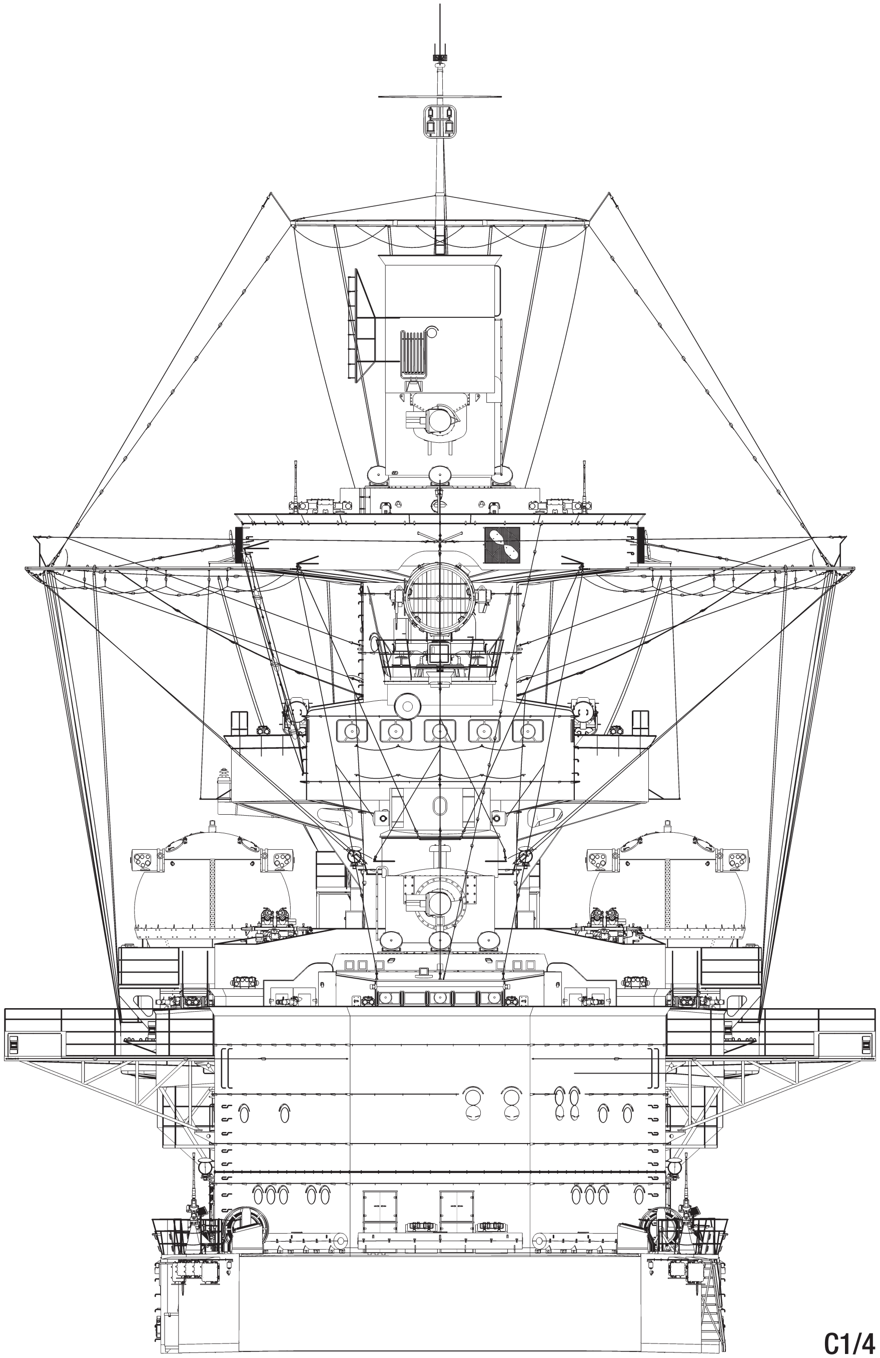

C1/4

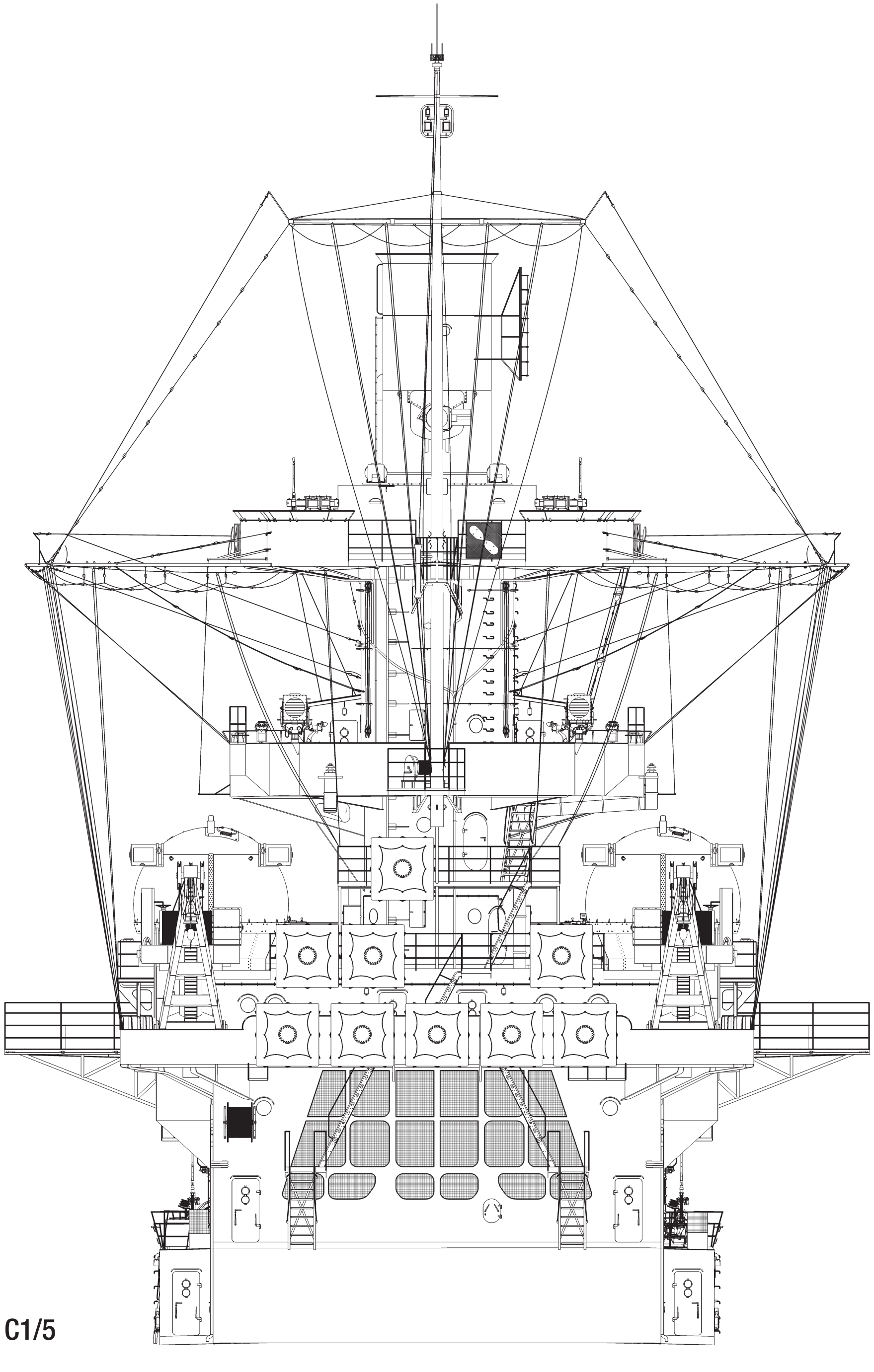

C1/5

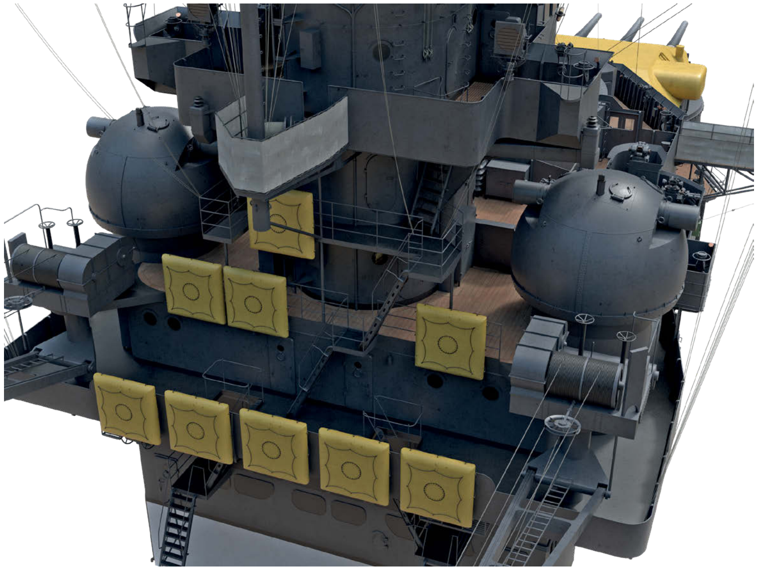

March 1943

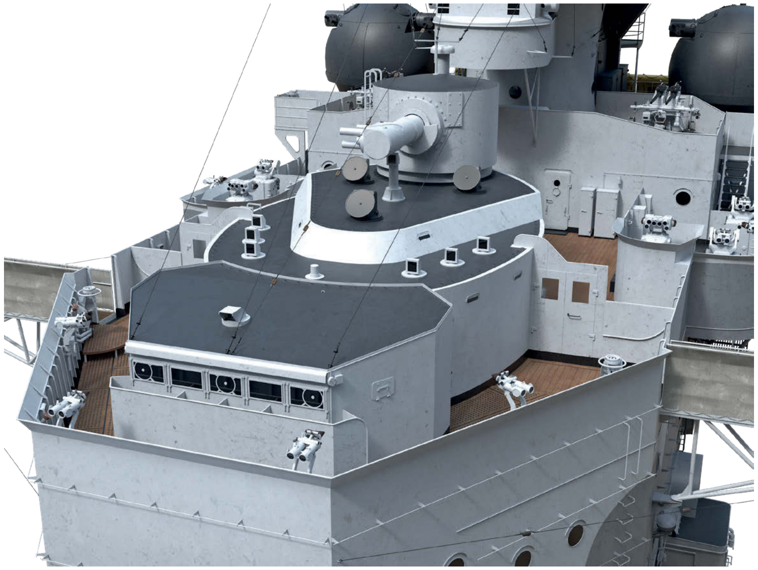

December 1943

FORE SUPERSTRUCTURE (1/200 SCALE)

C1/6 MAIN DECK LEVEL, 1941 – PLAN

1 Vent trunk
2 Fresh vegetable storeroom
3 Officer's cabin
4 Cabin for two petty officers
5 Officer's workroom
6 Hospital storage room
7 Washing room
8 Bath
9 Armoured communication shaft
10 Duty protection room
11 Hospital vestibule
12 Hospital toilet
13 Isolation room
14 X-ray room
15 Operating room
16 Sick bay
17 Main artillery ammunition shaft
18 10.5cm artillery ammunition shaft
19 Stairs to deck above
20 Hatchway to deck below
21 Passage

C1/7 SUPERSTRUCTURE DECK LEVEL, JANUARY 1939 – PLAN (FRAGMENT)

1 Single 2cm C/30 mount (replaced with C/38 mount in January 1941)

C1/8 SUPERSTRUCTURE DECK LEVEL, 1941 – PLAN

1 Vent trunk
2 Officers' toilet
3 Officers' bath
4 Officers' shower
5 Rainwear store
6 Cabin for 1 officer
7 Cabin for 2 officers
8 Cabin for ship's doctor
9 Cabin for ship's meteorological officer
10 First Officer's workroom
11 First Officer's cabin
12 Armoured communication shaft
13 Stairs to deck above
14 Hatchway to deck below
15 Passage
16 10.5cm artillery ammunition shaft
17 Repair workshop
18 28cm artillery ammunition loading point
19 Single 2cm C/38 mount (from January 1941)
20 Main artillery sub-calibre barrel container
21 Inflatable raft container
22 Additional platform for 2cm gun crew (added in mid-1939)
23 Rope reel (added around late 1939)
24 Skylight

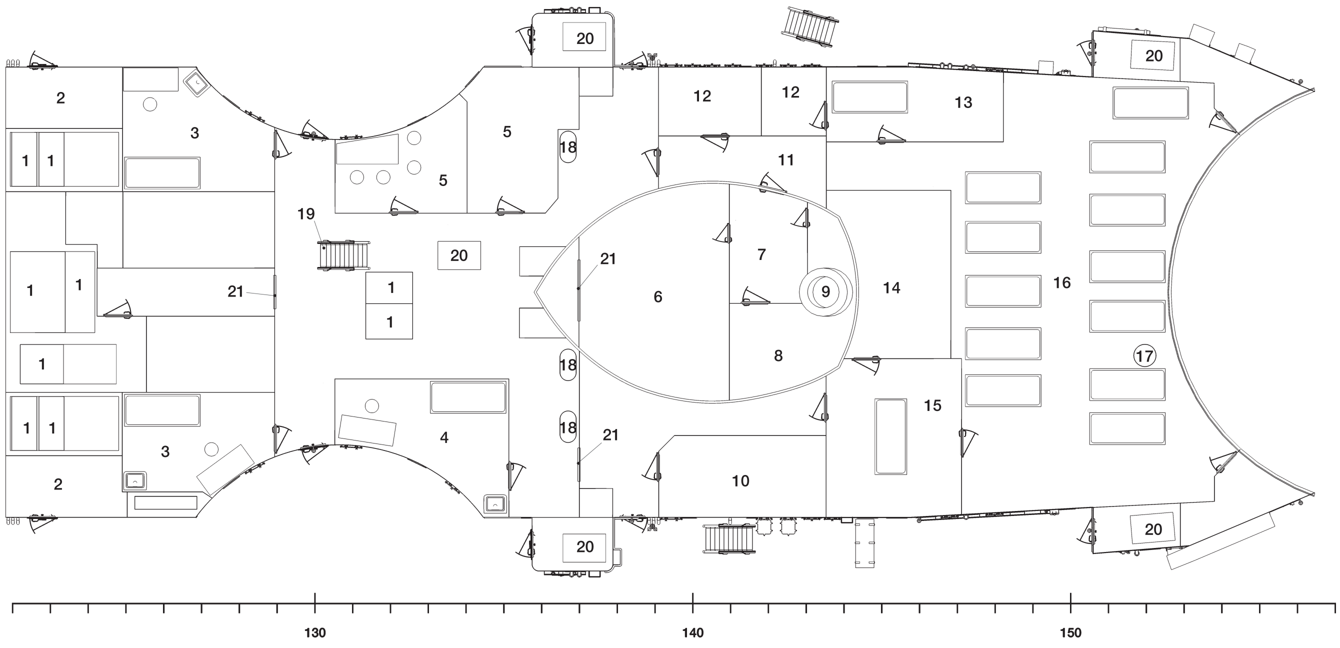

C1/6

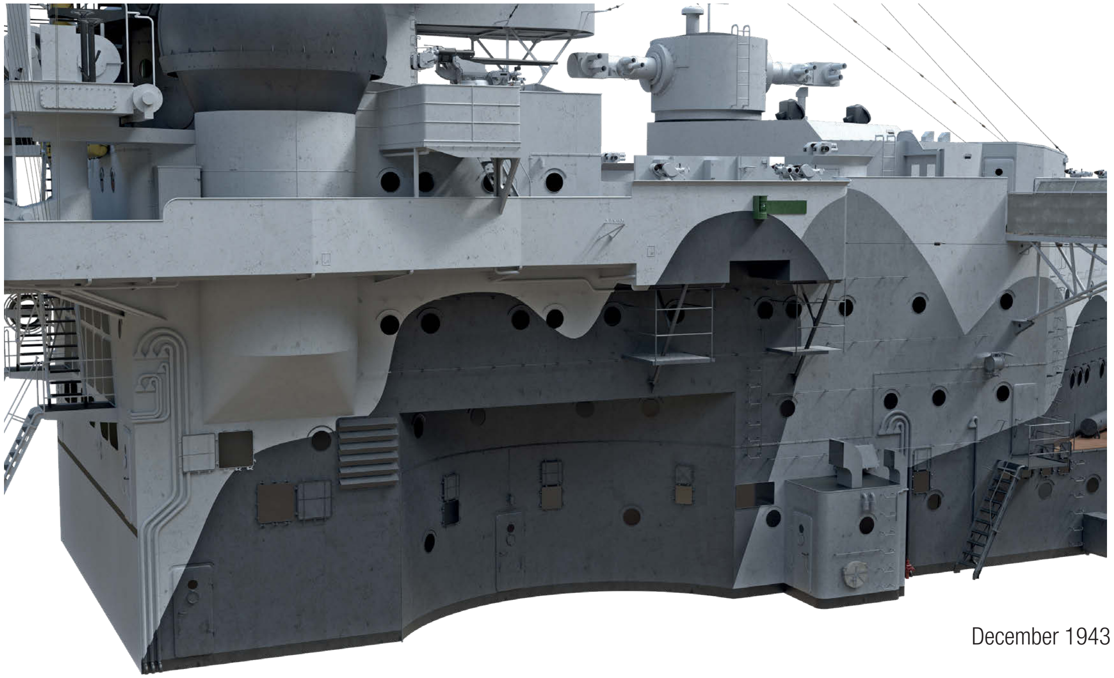

December 1943

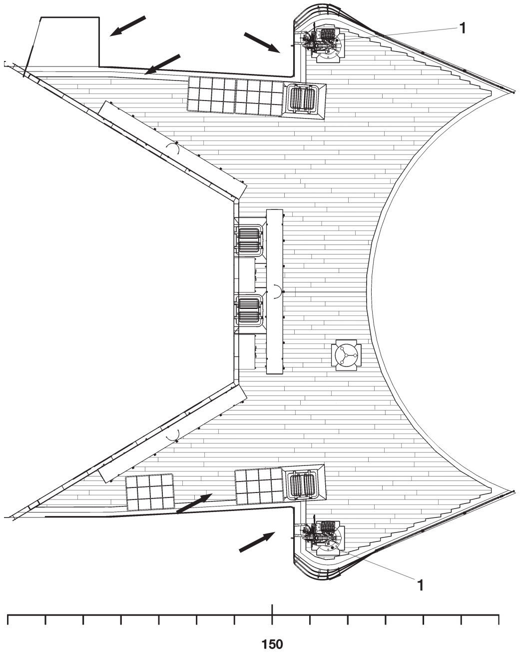

C1/7

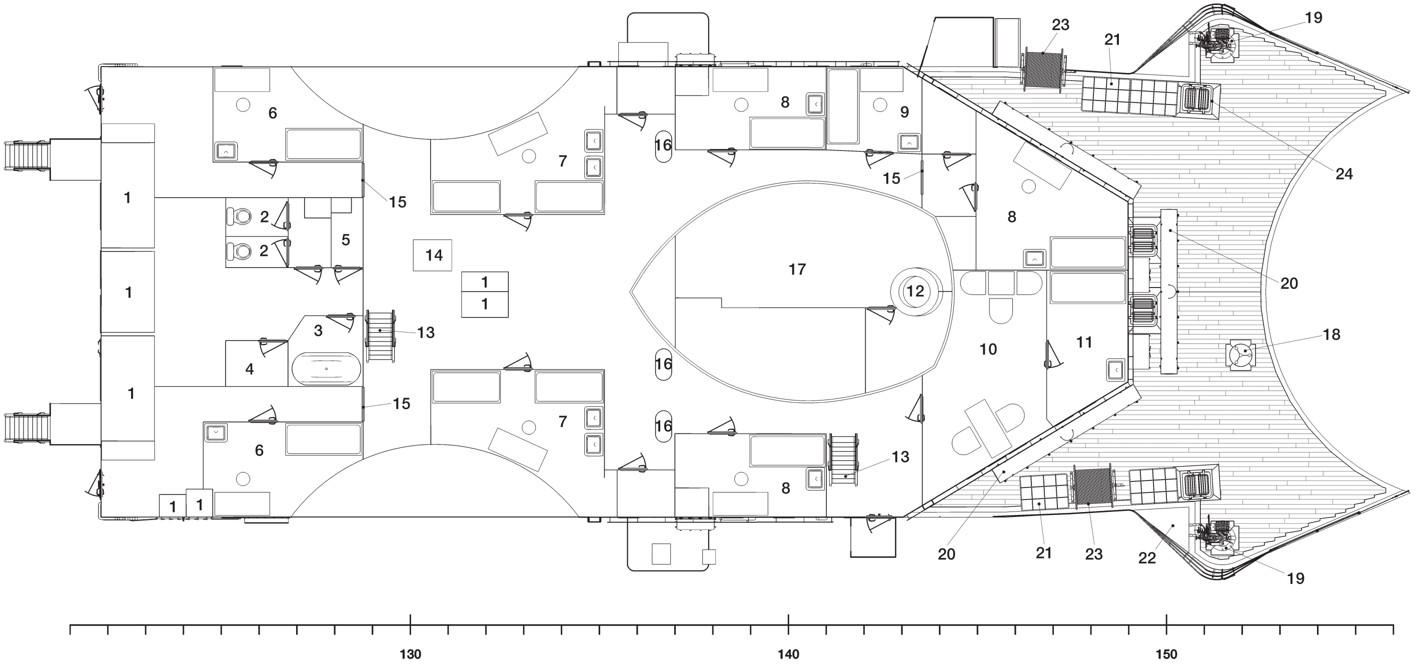

C1/8

FORE SUPERSTRUCTURE (1/200 SCALE)

C1/9 LOWER BRIDGE DECK LEVEL, 1941 – PLAN

1 Vent trunk
2 Officers' toilet
3 Officers' bath
4 Switch room
5 Cabin for 1 officer
6 Cabin for 2 officers
7 Cabin for First Navigation Officer
8 Cabin for Second Navigation Officer
9 Cabin for ship's meteorological officer
10 Radio room
11 Chart room
12 Cabin for First Artillery Officer
13 Cabin for Second Artillery Officer
14 Cabin for Third Artillery Officer
15 Armoured communication shaft
16 Stairs to deck above
17 Hatchway to deck below
18 Passage
19 Rope reel
20 SL-6 director base
21 Foot rail
22 Searchlight director service platform
23 Loudspeaker
24 Folding bridge wing support

C1/10 BRIDGE DECK LEVEL, EARLY 1939 – PLAN (STARBOARD SIDE FRAGMENT)

1 Inflatable raft container (removed from both sides in mid-1939)
2 Hinged shield (replaced with welded shield in mid-1940)
3 Folding bridge wing (open)

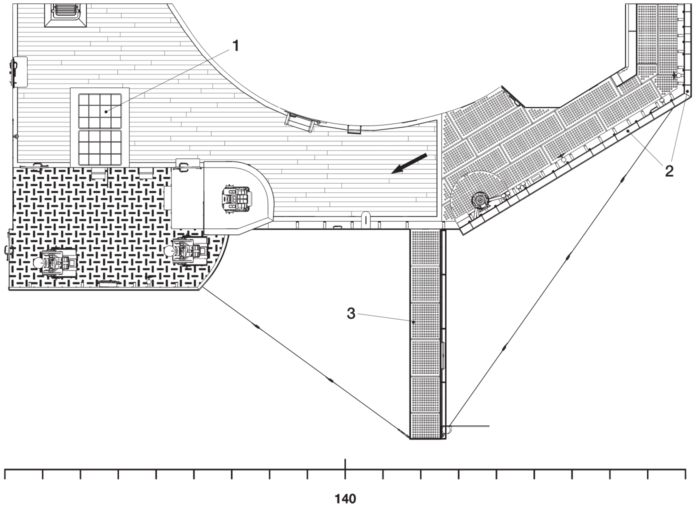

C1/10

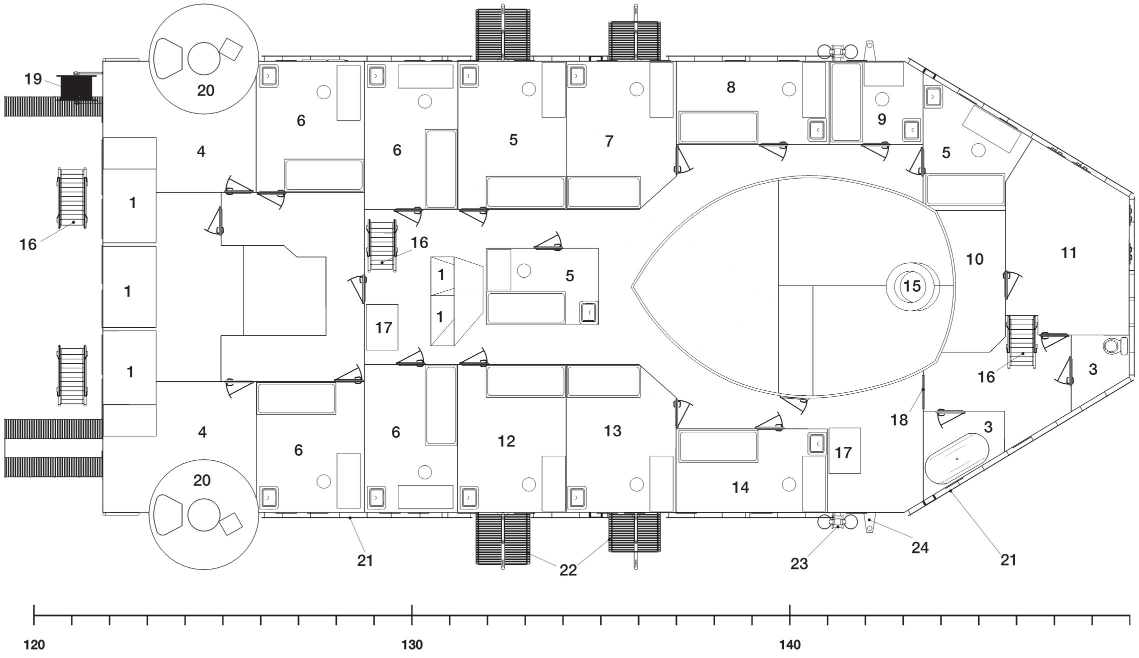

C1/9

February 1942

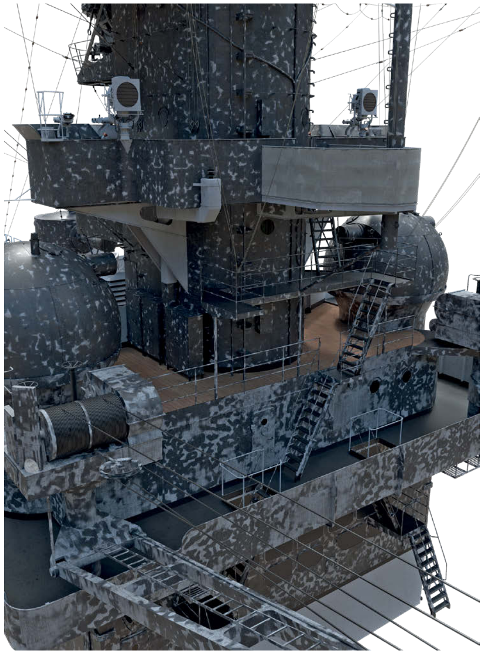

C1/11 FRAGMENT OF SUPERSTRUCTURE BETWEEN BRIDGE DECK LEVEL AND MAIN FIRE CONTROL POST ROOF LEVEL – BACK VIEW, EARLY 1939

C1/12 STARBOARD SIDE FOLDING BRIDGE WING – FRONT VIEW, EARLY 1939

1 Life ring (not present after April 1940)
2 Lamp (removed around April 1940)
3 Rotatable position light (starboard side – green, port side – red)

C1/13 BRIDGE DECK LEVEL, 1941 – PLAN

1 Vent trunk
2 Cabin for 1 officer
3 Cabin for 2 officers
4 Cabin for 3 officers
5 Shelter for signaling personnel
6 Artillery technical officer's cabin
7 Captain's sea cabin
8 Conning tower
9 *Zielgeber* C/38 S
10 350mm thick armor plate
11 Periscope
12 Rangefinder ring
13 Armoured communication shaft opening
14 Open bridge with wooden grating
15 Removable lookout binoculars
16 Compass repeater
17 Voice pipes
18 Folding bridge wing (closed)
19 Barrier with double doors (added in mid-1939)
20 Open bridge shelter
21 Rotatable position light (starboard side – green, port side – red)
22 Position light (added in mid-1939)
23 Welded shield (replaced hinged shield in mid-1940)
24 *Zielsäule* C/38S
25 Searchlight director
26 SL-6 director base
27 Stairs to deck above
28 Hatchway to deck below
29 Passage
30 Boat crane base
31 Signal bridge
32 3.7cm mount support
33 Skylight

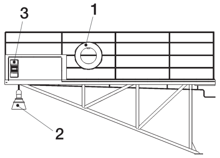

C1/12

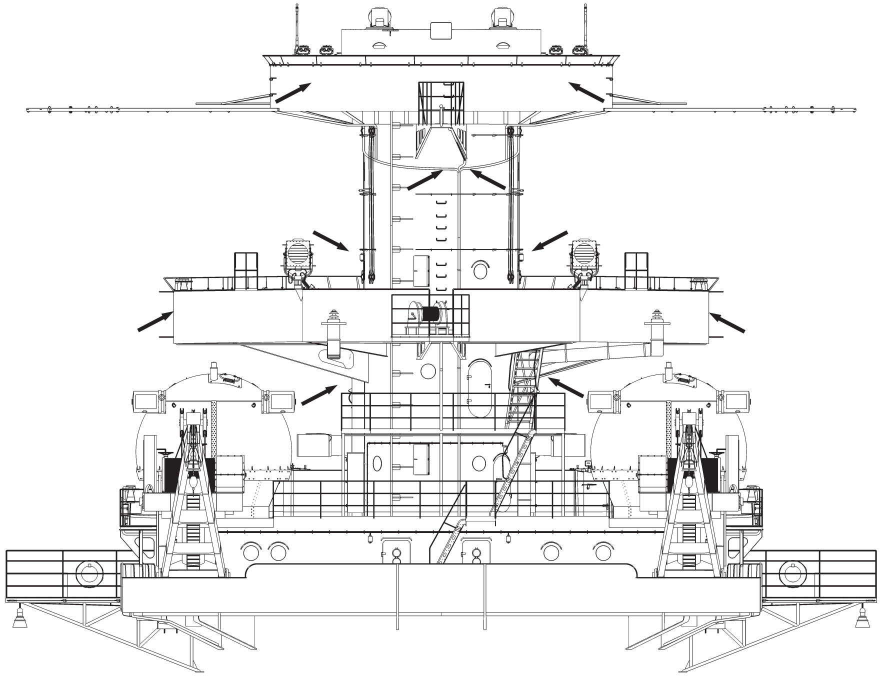

C1/11

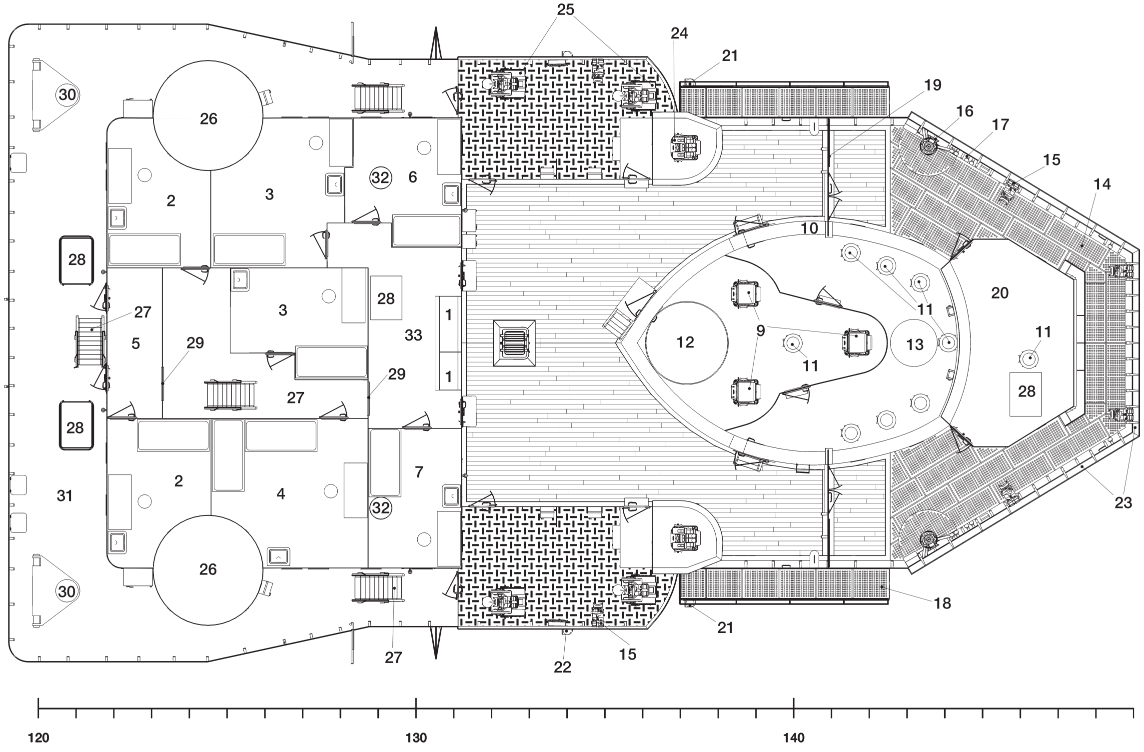

C1/13

FORE SUPERSTRUCTURE (1/200 SCALE)

C1/14 BRIDGE DECK LEVEL – BOTTOM VIEW (PORT SIDE FRAGMENT)

C1/15 BRIDGE DECK LEVEL – VIEW FROM FRAME 148 TOWARDS THE STERN, 1941 (STARBOARD SIDE FRAGMENT)

1 Barrier with double doors (added in mid-1939)
2 Hinged shield (shown in lowered position – when the *Zielsäule* at frame 137 is in operation)
3 Clear view screen
4 Vision slit

C1/16 BRIDGE DECK LEVEL – VIEW FROM FRAME 135 TOWARDS THE BOW (PORT SIDE FRAGMENT)

1 Hinged shield (shown in raised position – when the *Zielsäule* at frame 137 is not in use)

C1/17 FRAGMENT OF SUPERSTRUCTURE BETWEEN BRIDGE DECK LEVEL AND MAIN FIRE CONTROL POST ROOF LEVEL – VIEW FROM FRAME 132 TOWARDS THE STERN, FEBRUARY 1942

1 FuMB Ant 4 *Sumatra* (added in January 1942, relocated to foretop in mid-1942)
2 Shield for the 3m rangefinder (added in mid-1941)
3 Steel plate shield (welded to the railing from mid-1941)

C1/18 FRAGMENT OF SUPERSTRUCTURE BETWEEN BRIDGE DECK LEVEL AND UPPER MAST DECK LEVEL – BACK VIEW, 1943

1 Life raft (added in mid-1942)

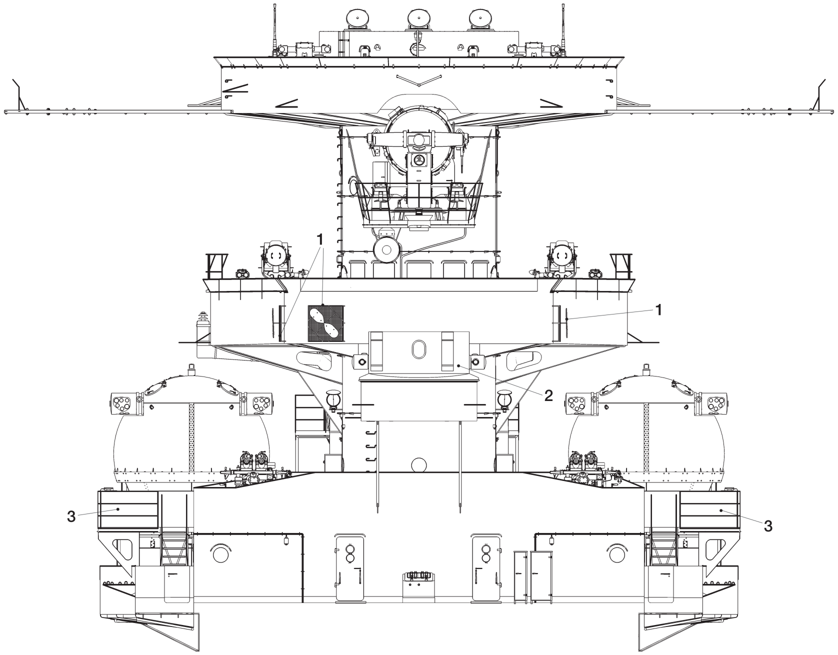

C1/17

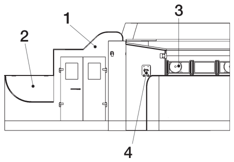

C1/15

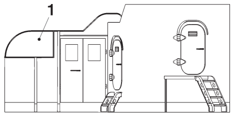

C1/16

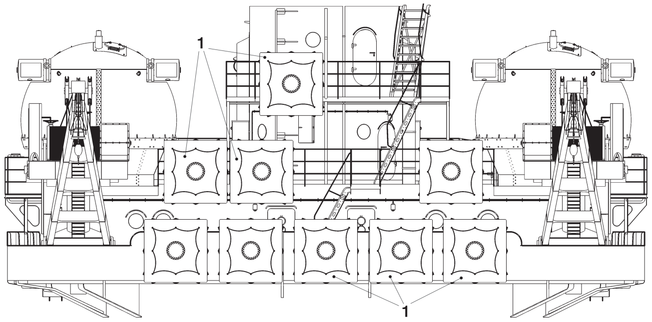

C1/18

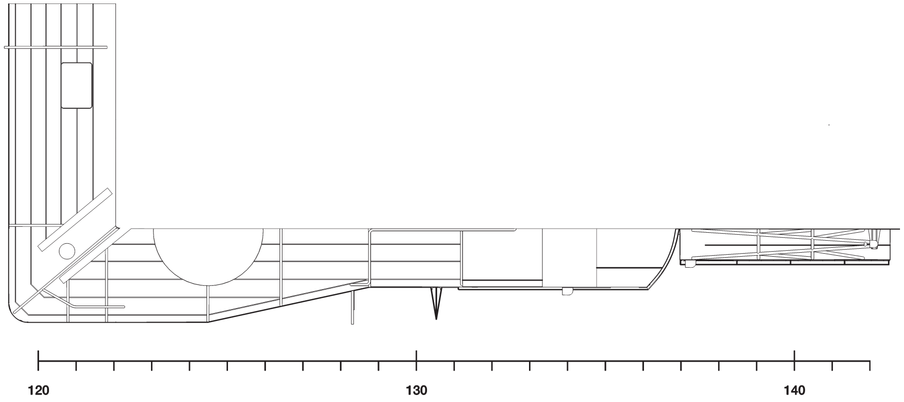

C1/14

C1/19 LOWER MAST DECK LEVEL, 1941 – PLAN

1 Meteorological office
2 Weather radio room
3 Stairs to deck above
4 Hatchway to deck below
5 Compass repeater
6 Voice pipe
7 Twin 3.7cm mount
8 Ammunition locker
9 Cable shaft
10 3m rangefinder platform support
11 SL-6 director
12 Boat crane
13 2cm ammunition hoist
14 Wire antenna duct
15 Conning tower armoured roof
16 Open bridge shelter roof
17 *Zielgeber* C/38 S
18 Periscope
19 7m rangefinder dome
20 Vent

December 1943

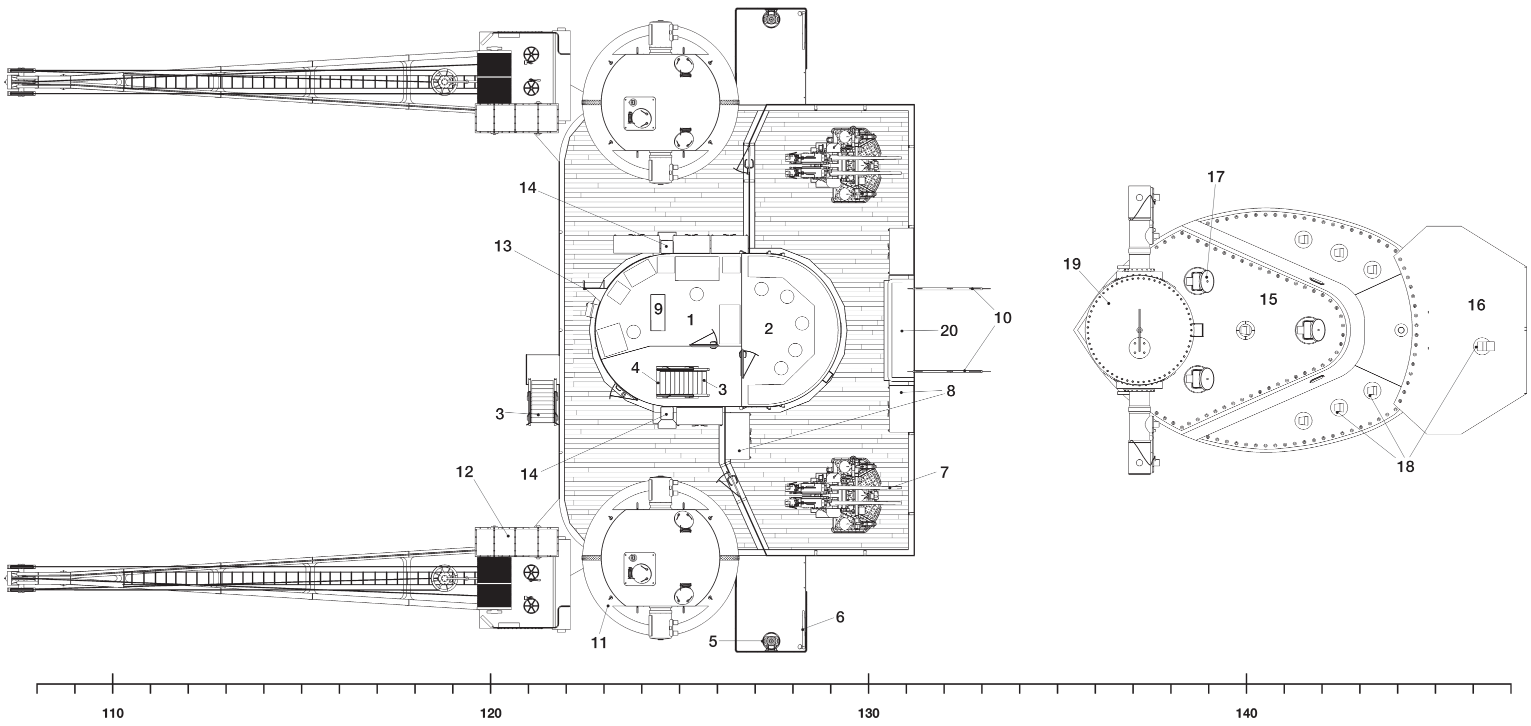

FORE SUPERSTRUCTURE (1/200 SCALE)

C1/20 UPPER MAST DECK LEVEL, 1941 – PLAN

1 Officer's toilet
2 Admiral's sea cabin
3 Stairs to deck above
4 Hatchway to deck below
5 Foremast platform support
6 2cm ammunition hoist
7 Cable shaft
8 Loudspeaker
9 Foot rail
10 Foot step
11 Wire antenna outrigger
12 3m rangefinder
13 Wire antenna duct

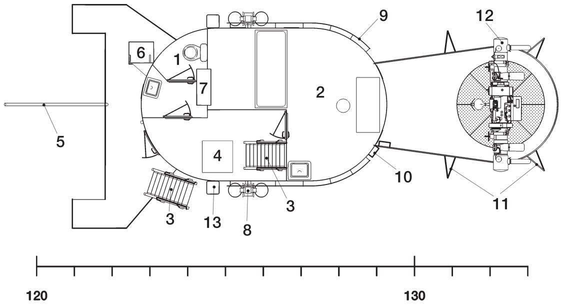

C1/20

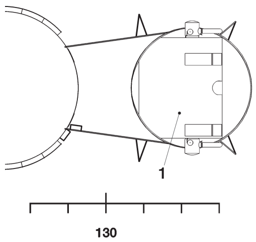

C1/21

C1/21 UPPER MAST DECK LEVEL, 1942 – PLAN (FRAGMENT)

1 Shield of the 3m rangefinder (added in mid-1941)

C1/22 UPPER MAST DECK LEVEL – BOTTOM VIEW

C1/23 FRAGMENT OF SUPERSTRUCTURE BETWEEN UPPER MAST DECK LEVEL AND MAIN FIRE CONTROL POST ROOF LEVEL – FRONT VIEW, EARLY 1939

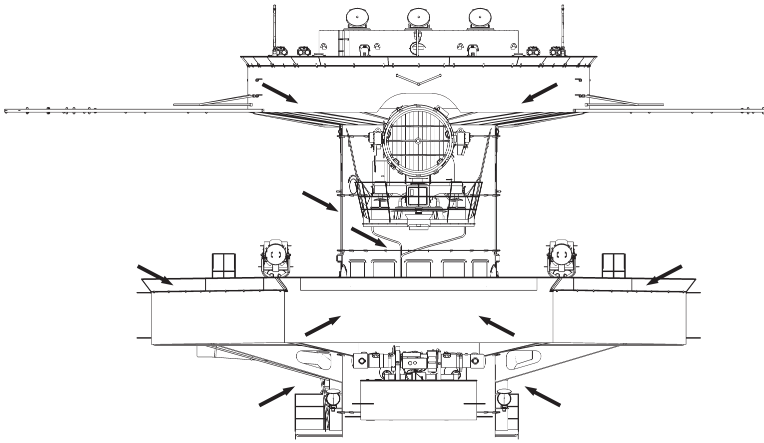

C1/23

C1/24 FRAGMENT OF SUPERSTRUCTURE BETWEEN UPPER MAST DECK LEVEL AND MAIN FIRE CONTROL POST ROOF LEVEL – FRONT VIEW, EARLY 1940

1 Supports of welded bridge wing shields (added in mid-1939)
2 Additional support of the bridge wing (added in mid-1939)
3 Fog horn (added in mid-1939)
4 Wire antenna outrigger (added in mid-1939)

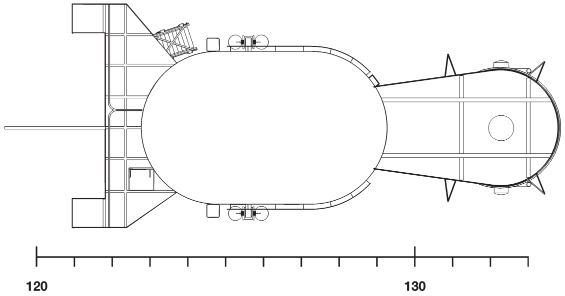

C1/22

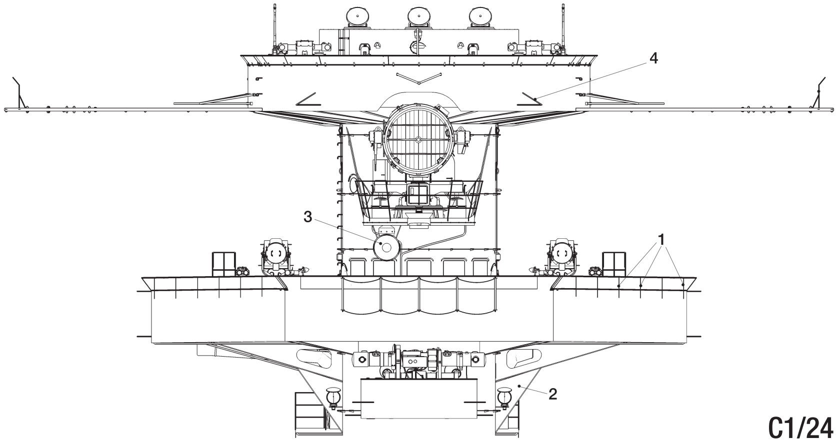

C1/24

C1/25 ADMIRAL'S BRIDGE LEVEL, EARLY 1939 – PLAN

1 Long bridge wing (original form)
2 Hinged shield (replaced with welded shield in mid-1939)

C1/26 ADMIRAL'S BRIDGE LEVEL, FEBRUARY 1942 – PLAN

1 Communications centre
2 Chart room
3 Shelter of admiral's bridge
4 Cable shaft
5 Stairs to deck above
6 Hatchway to deck below
7 Foremast platform
8 2cm ammunition hoist
9 Wire antenna duct
10 Signalman's platform
11 Wooden grating
12 Removable lookout binoculars
13 Voice pipe
14 Signal lamp
15 Compass repeater
16 Shortened bridge wing (from mid-1940)
17 Wire antenna outrigger
18 Hinged shield
19 Welded shield (replaced hinged shield in mid-1939)
20 FuMB Ant 4 *Sumatra* (added in January 1942, relocated to foretop in mid-1942)

C1/27 ADMIRAL'S BRIDGE LEVEL, 1943 – PLAN

1 Fully enclosed admiral's bridge (from mid-1942)
2 Foot rail
3 Signalman's platform (relocated in mid-1942)

C1/28 ADMIRAL'S BRIDGE LEVEL, 1943 – BOTTOM VIEW

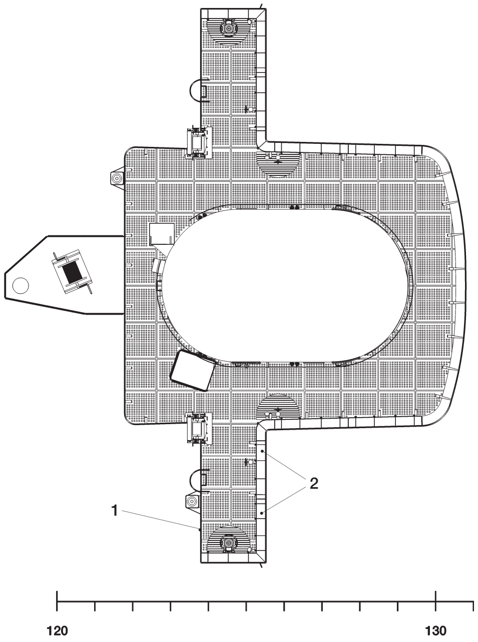

C1/25

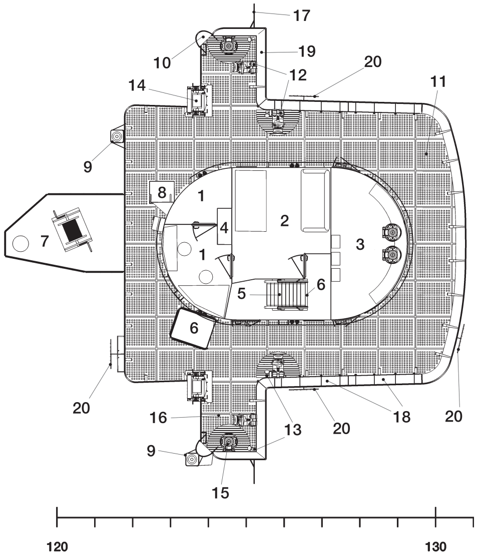

C1/26

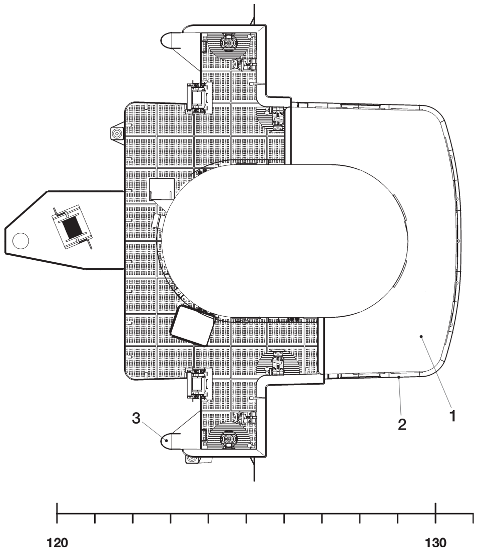

C1/27

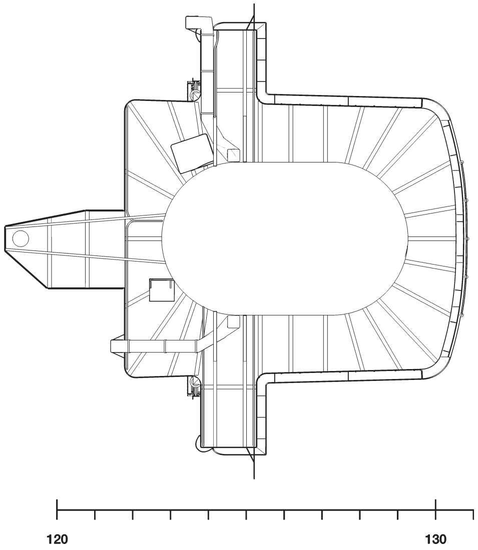

C1/28

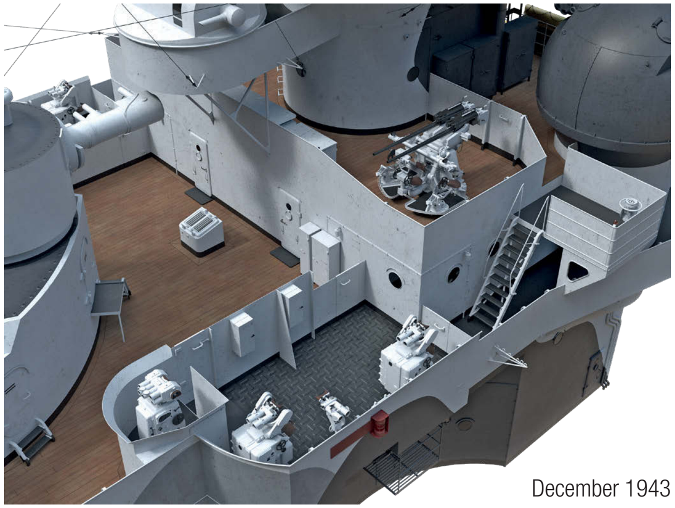

December 1943

FORE SUPERSTRUCTURE (1/200 SCALE)

C1/29 FRAGMENT OF SUPERSTRUCTURE BETWEEN ADMIRAL'S BRIDGE LEVEL AND MAIN FIRE CONTROL POST ROOF LEVEL – BACK VIEW, FEBRUARY 1942

1 FuMB Ant 4 *Sumatra* (added in January 1942, relocated to foretop in mid-1942)
2 Drain pipes (modified in mid-1939)

C1/30 SEARCHLIGHT DECK LEVEL, 1941 – PLAN

1 Air tracking station
2 Cable shaft
3 Stairs to deck above
4 Hatchway to deck below
5 2cm ammunition hoist
6 Foot rail
7 150cm searchlight
8 Lantern (white)

C1/31 SEARCHLIGHT DECK LEVEL, 1941 – BOTTOM VIEW

1 Fog horn (added in mid-1939)

C1/32 FORETOP LEVEL, EARLY 1939 – PLAN

1 Lookout binoculars on a column
2 Single 2cm C/30 mount

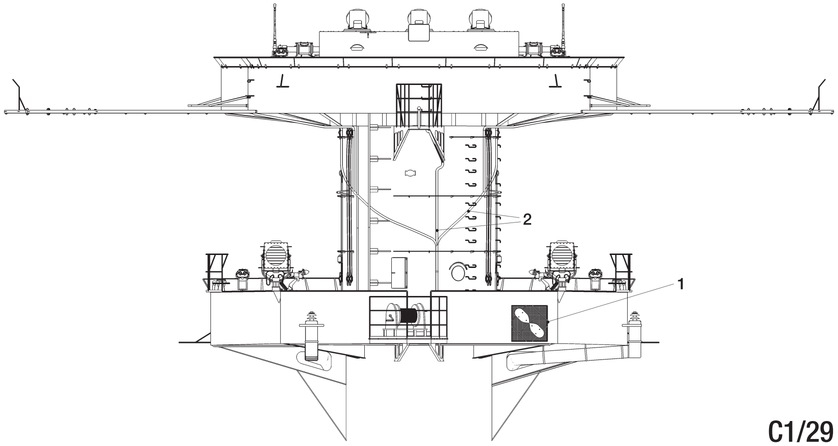

C1/29

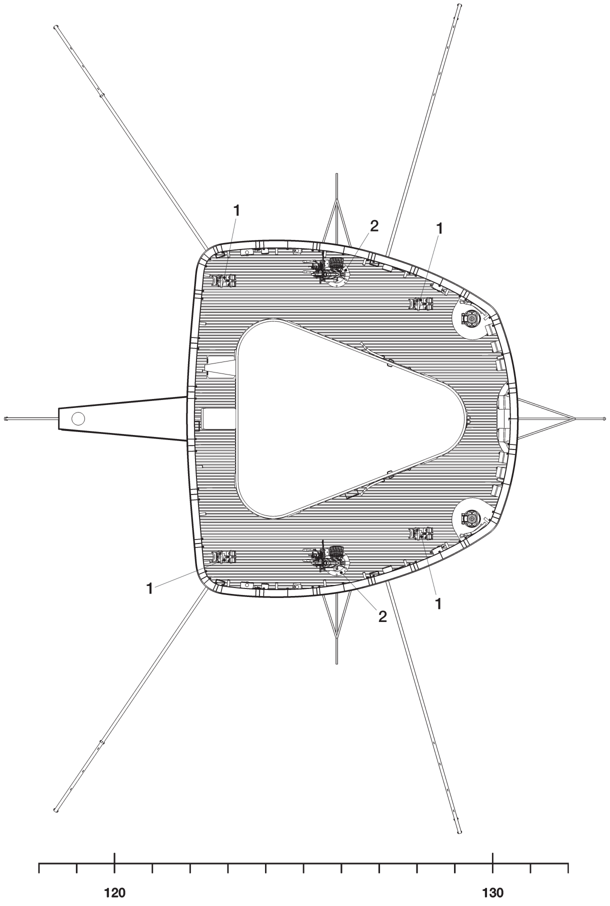

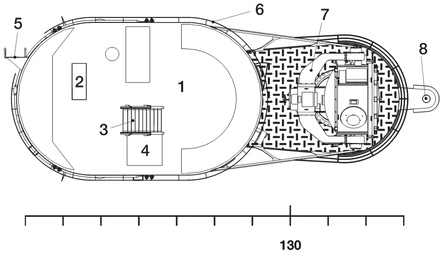

C1/30

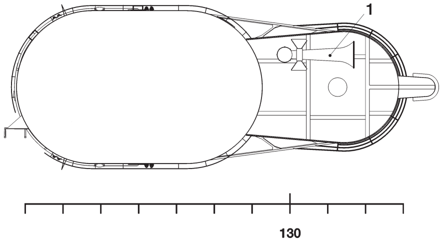

C1/31

C1/32

C1/33 FORETOP LEVEL, NOVEMBER 1939 – PLAN

1 ZAG (*Zielanweisegerät*, AA artillery target giver), most probably replaced lookout binoculars in November 1939
2 New shape of foretop platform to make room for ZAGs (from November 1939)
3 Wire antenna outrigger (added in November 1939)

C1/34 FORETOP LEVEL, 1941 – PLAN

1 Main fire control post
2 *Zielgeber* C/38S
3 Hatchway to deck below
4 Cable shaft opening
5 Rangefinder ring
6 Single 2cm C/38 mount (replaced C/30 mount in January 1941)
7 New shape of foretop platform to make more room for 2cm gun crews (from mid-1940)
8 Hinged shield
9 2cm ammunition hoist
10 ZAG (*Zielanweisegerät*, AA artillery target giver)
11 Lookout binoculars on a column
12 Compass repeater
13 Wind direction transmitter (fitted in autumn 1940, relocated in mid-1941)
14 Wind strength transmitter (fitted in autumn 1940, relocated in mid-1941)

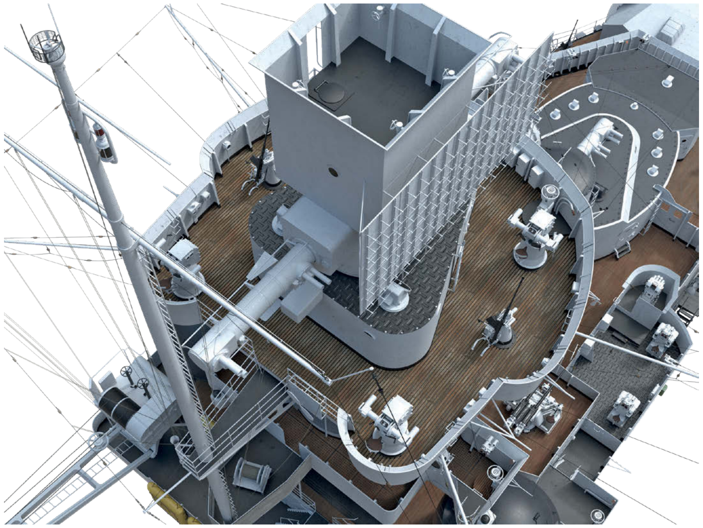

December 1943

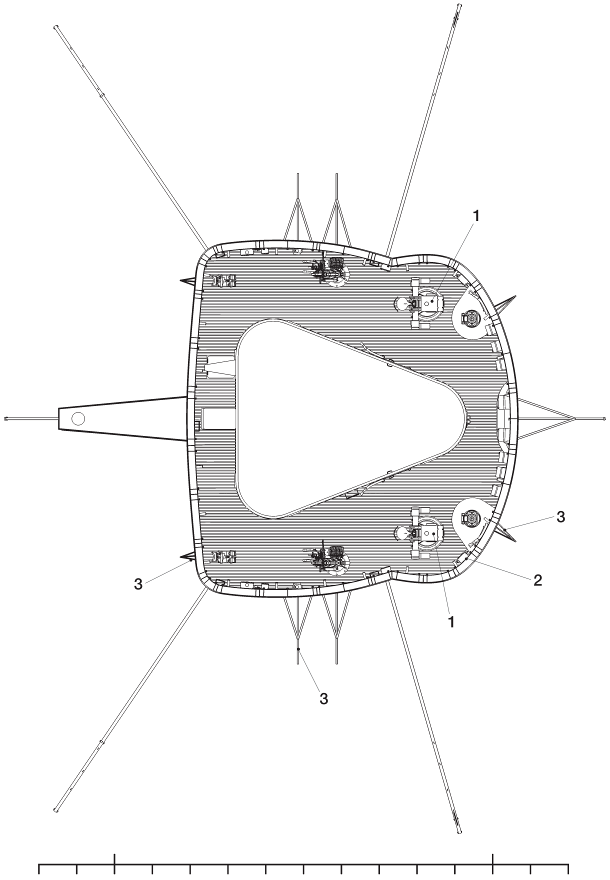

C1/33

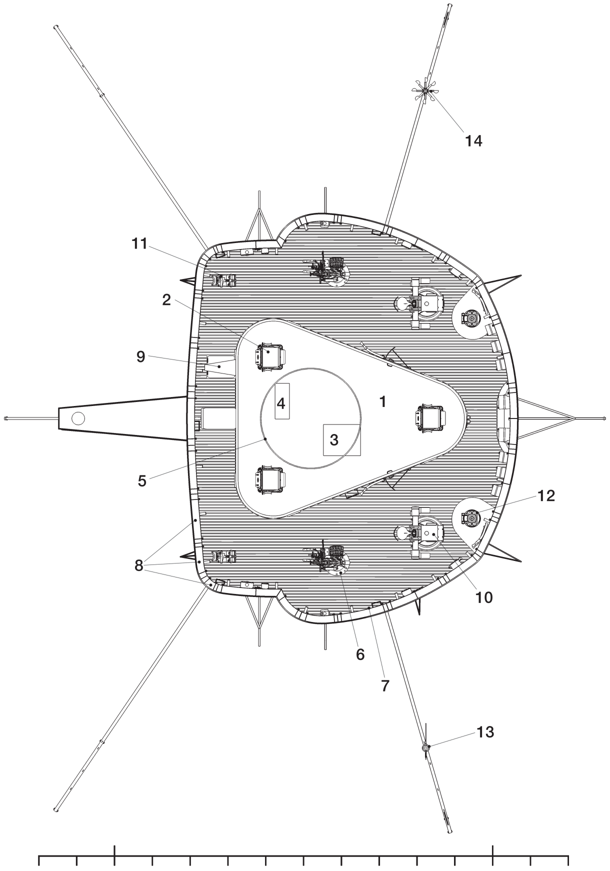

C1/34

FORE SUPERSTRUCTURE (1/200 SCALE)

C1/35 FRAGMENT OF SUPERSTRUCTURE BETWEEN FORETOP LEVEL AND MAIN FIRE CONTROL POST ROOF LEVEL – FRONT VIEW, 1941

1 Wind direction transmitter (fitted in autumn 1940, relocated in mid-1941)
2 Wind strength transmitter (fitted in autumn 1940, relocated in mid-1941)

C1/36 FORETOP LEVEL, FROM MID-1942 – PLAN

1 ZAG (*Zielanweisegerät*, AA artillery target giver), most probably replaced lookout binoculars in mid-1942
2 New shape of foretop platform to make room for aft pair of ZAGs (from mid-1942)
3 FuMB Ant 4 *Sumatra* (relocated to foretop in mid-1942)

C1/37 FORETOP LEVEL, FROM MID-1942 – BOTTOM VIEW

C1/38 MAIN FIRE CONTROL POST ROOF LEVEL, 1941 – PLAN

1 *Zielgeber* C/38S
2 10.5cm rangefinder dome and radar hut

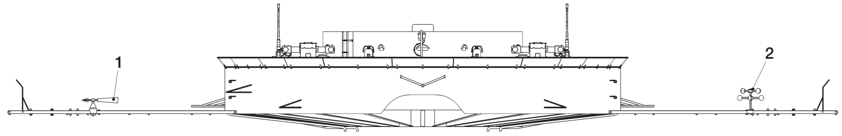

C1/35

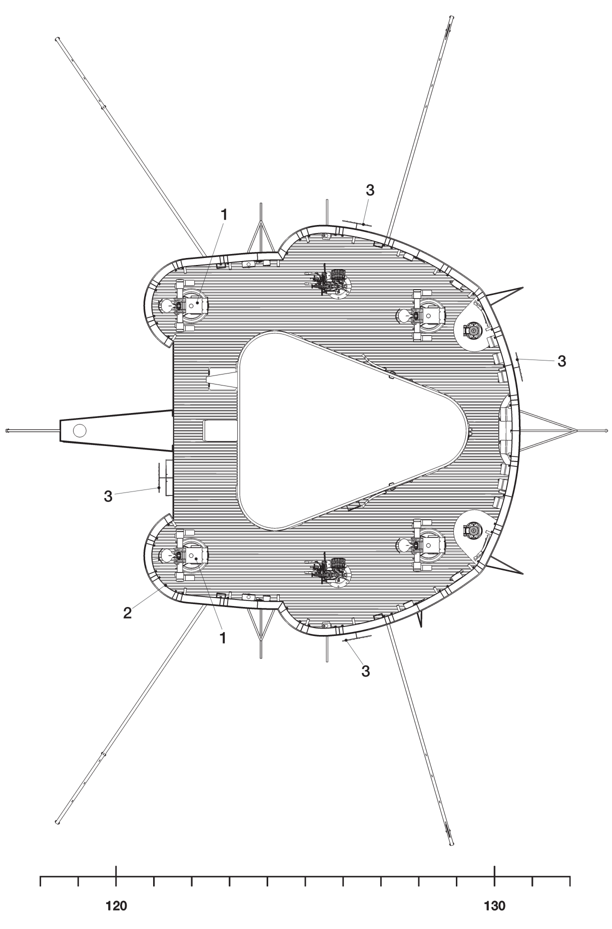

C1/36

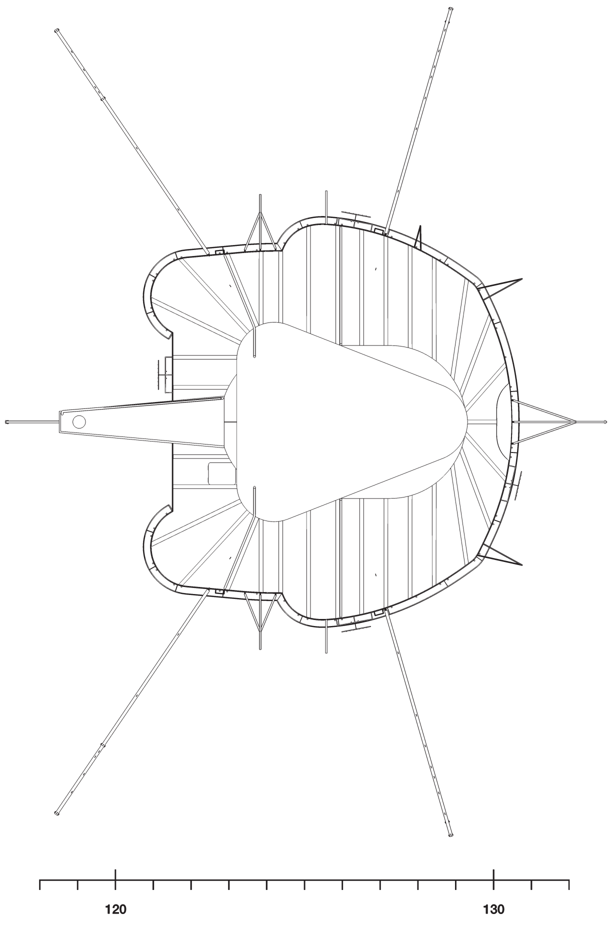

C1/37

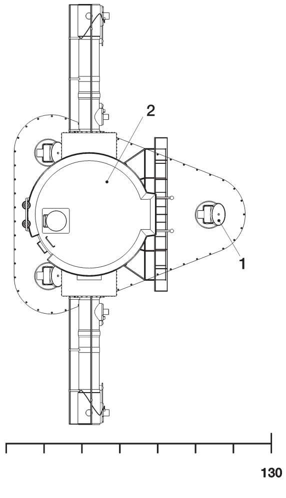

C1/38

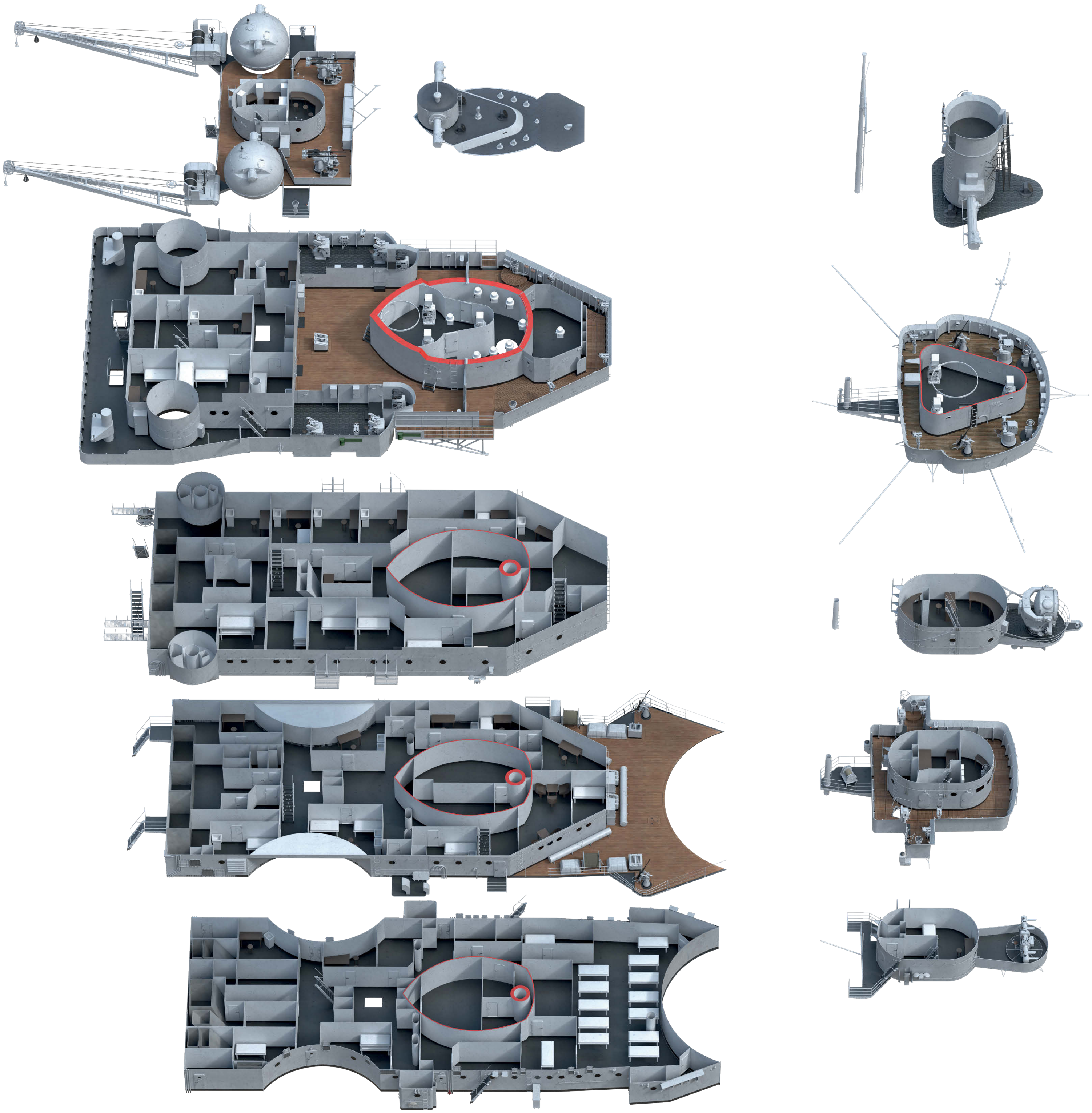

MIDDLE SUPERSTRUCTURE (1/200 SCALE)

C2/1 RIGHT PROFILE WITH BOATS AND 10.5CM GUNS OMITTED FOR CLARITY, JANUARY 1939

1 Cradle for an additional cutter (removed around early 1940)

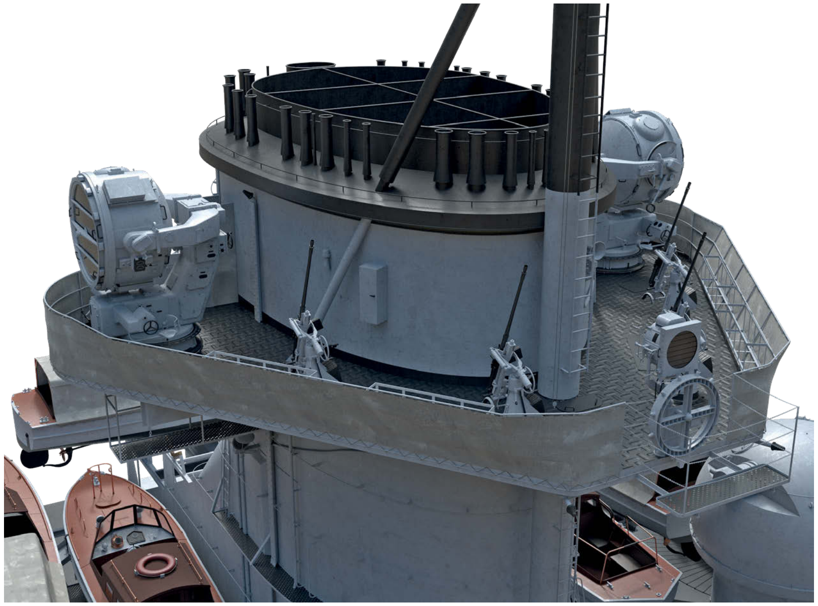

January 1939

1941

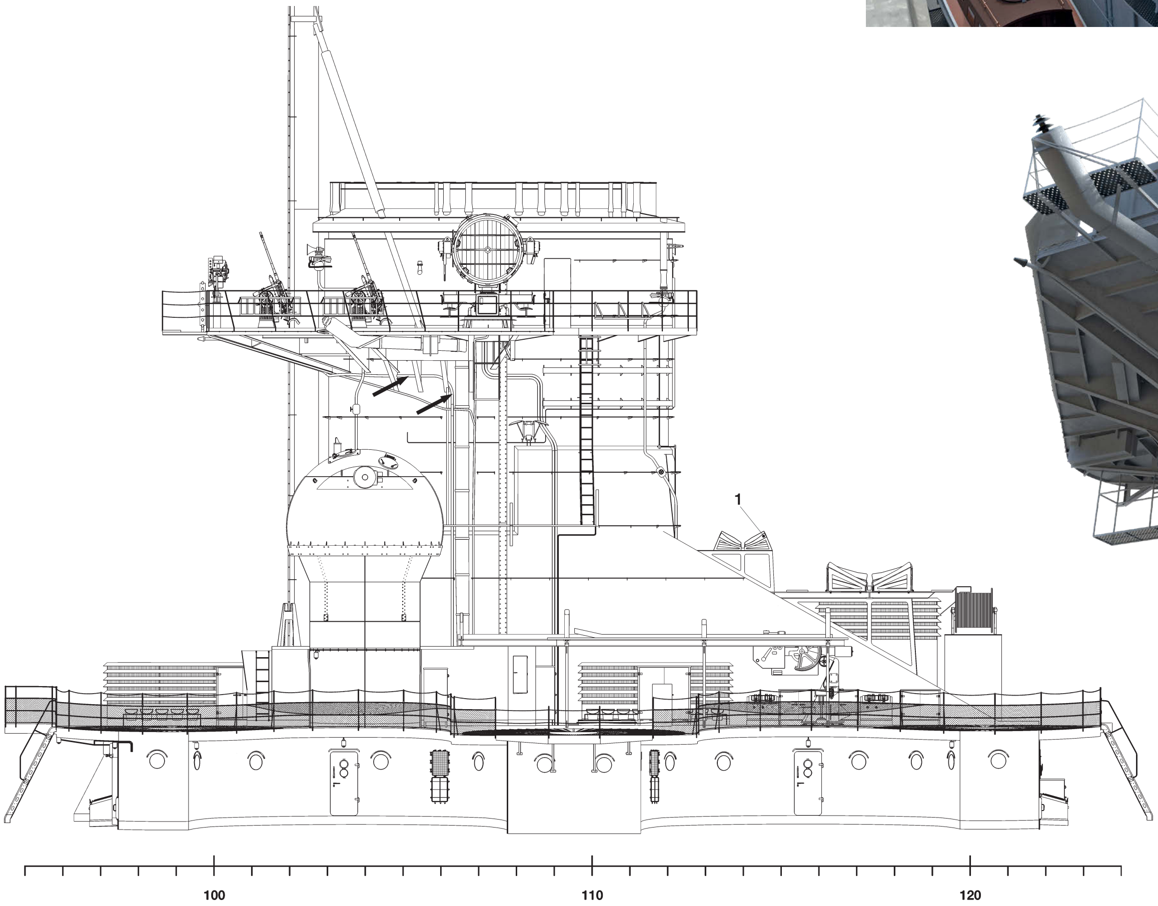

C2/1

C2/2 FRONT VIEW WITH BOATS AND 10.5CM GUNS OMITTED FOR CLARITY, JANUARY 1939
C2/3 BACK VIEW WITH BOATS AND 10.5CM GUNS OMITTED FOR CLARITY, JANUARY 1939

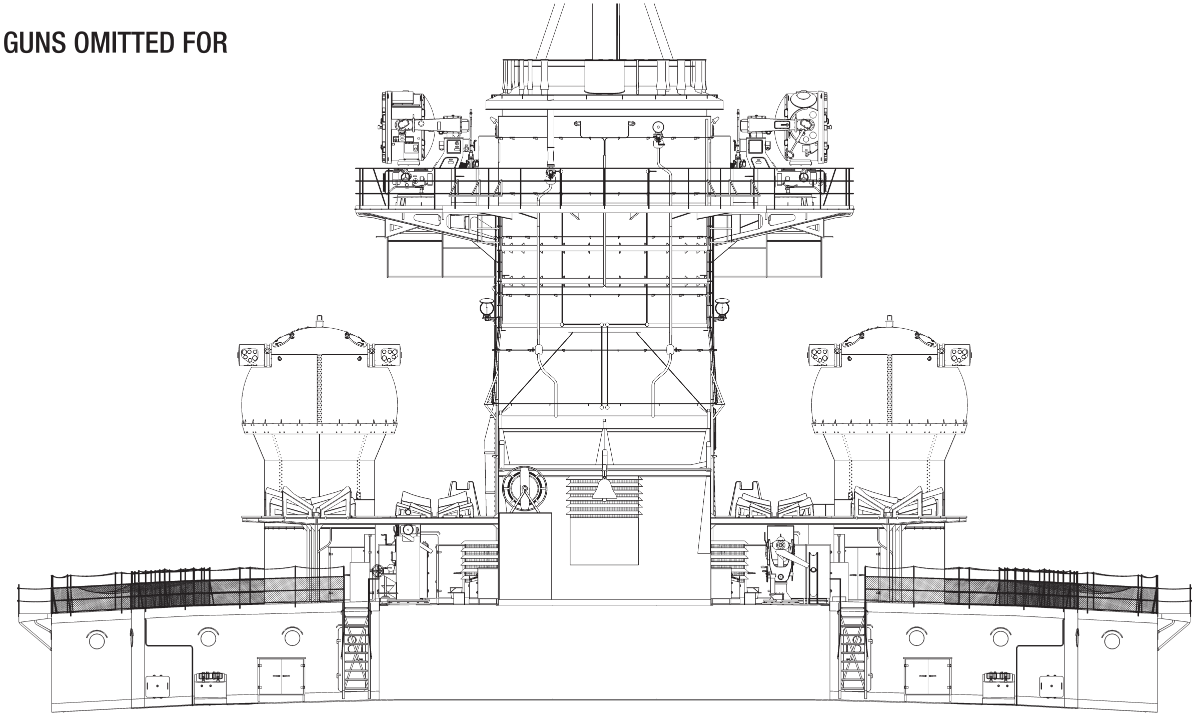

C2/2

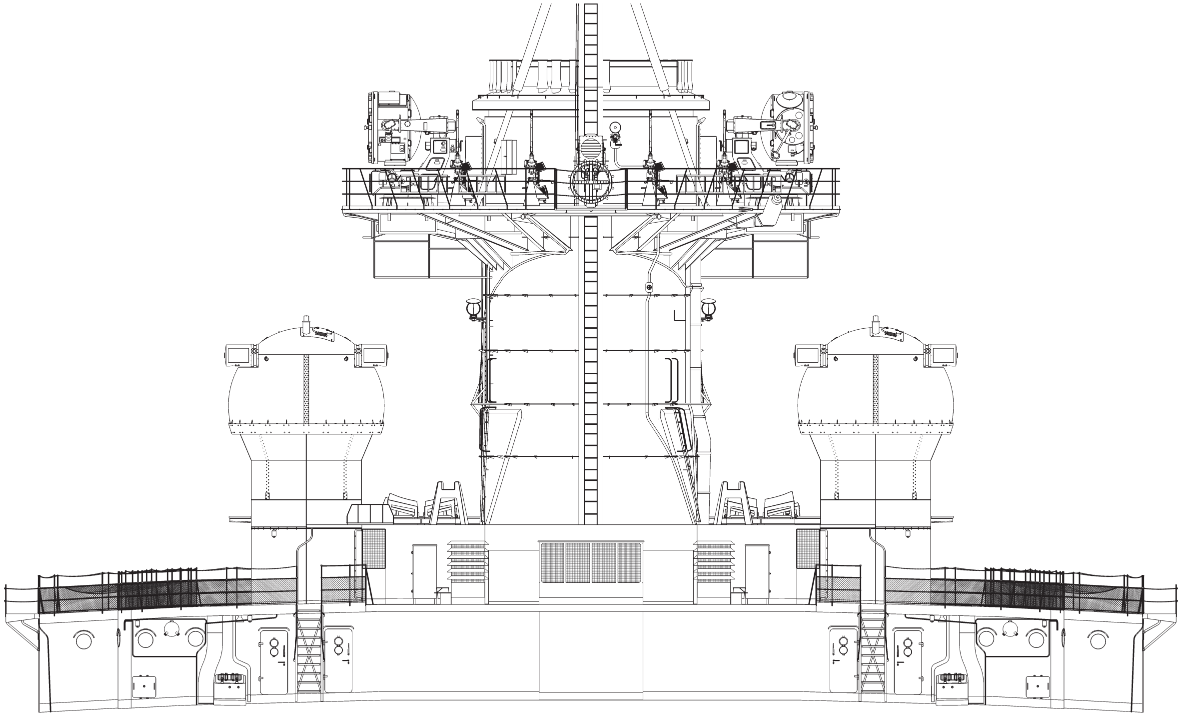

C2/3

1941

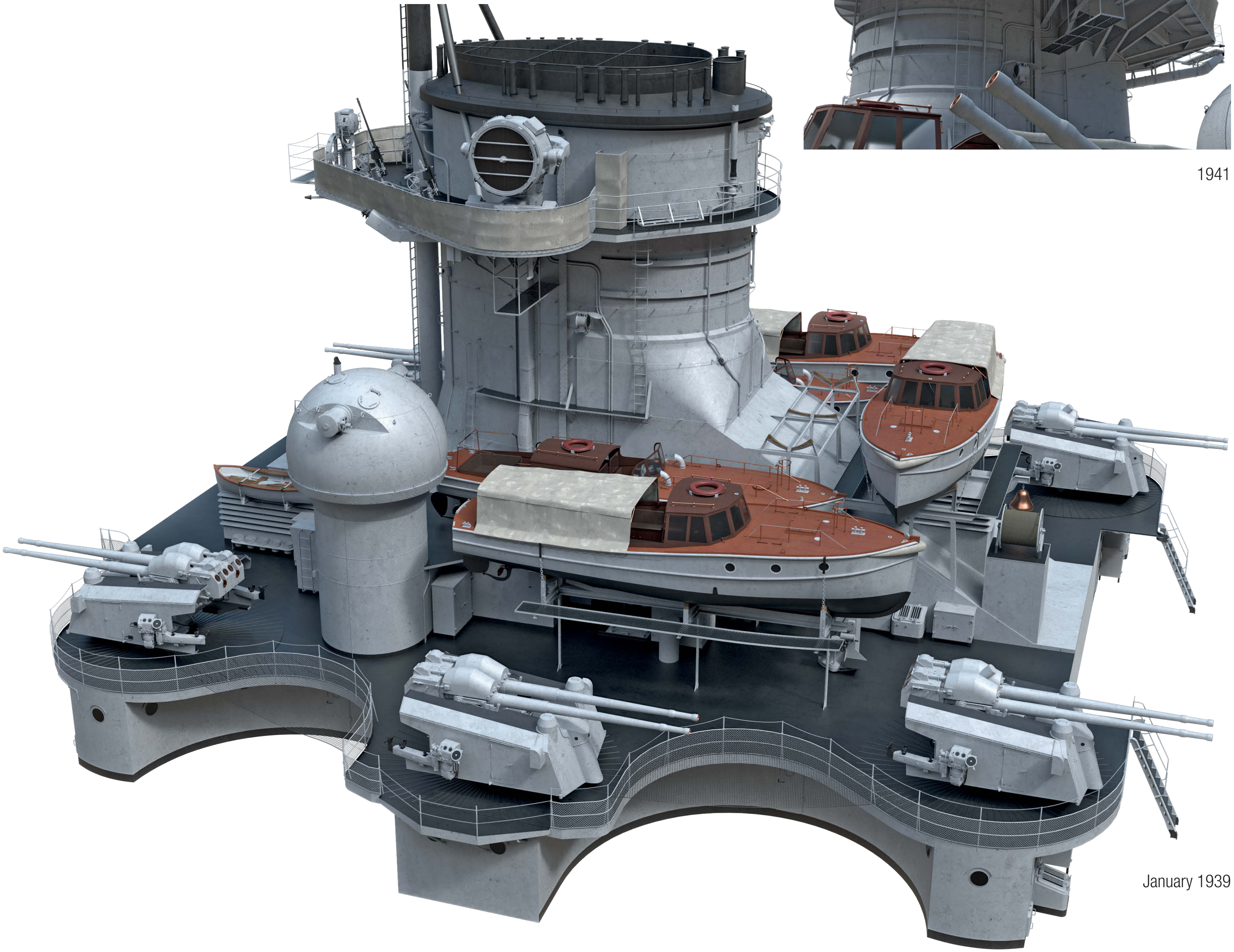
January 1939

1941

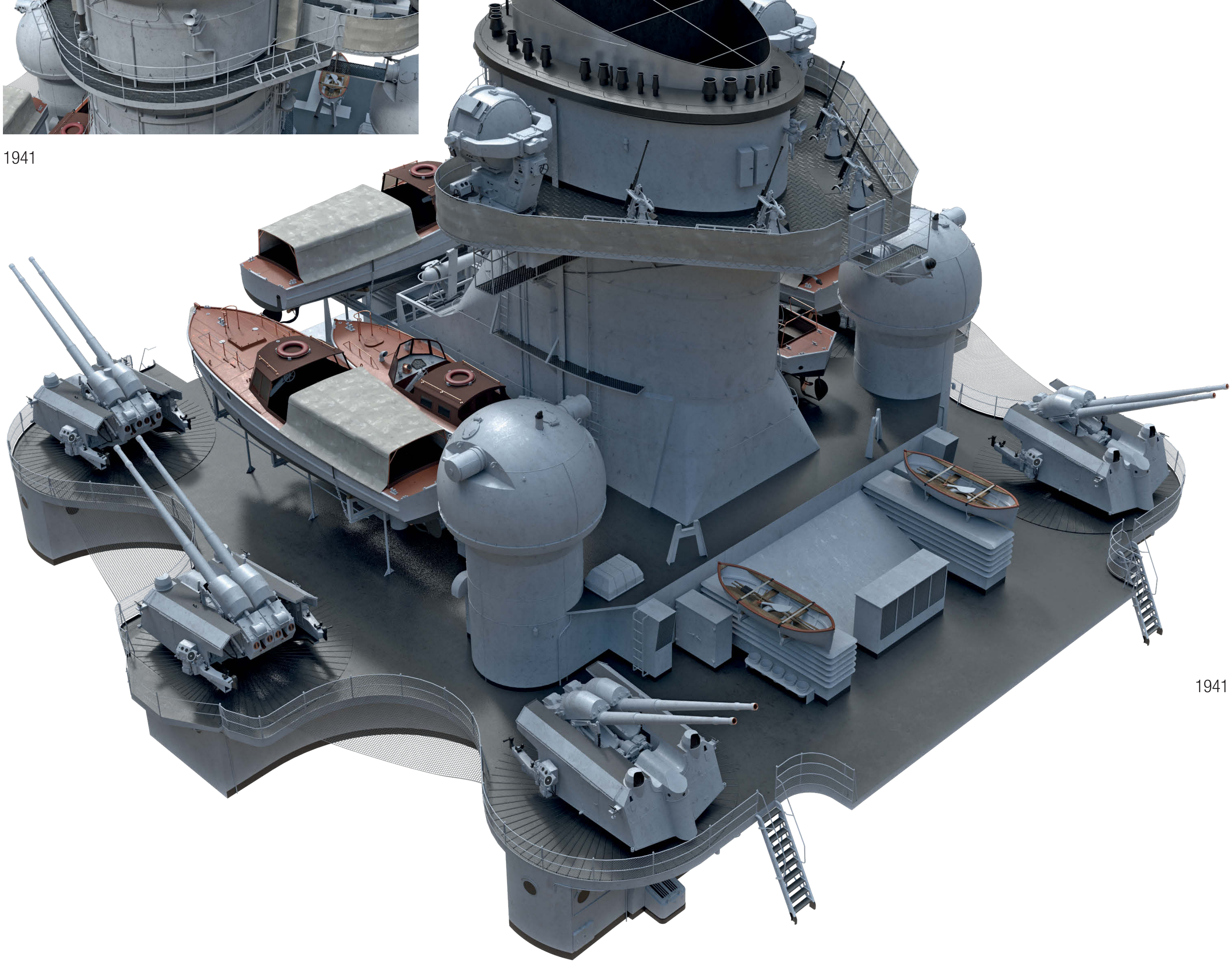

1941

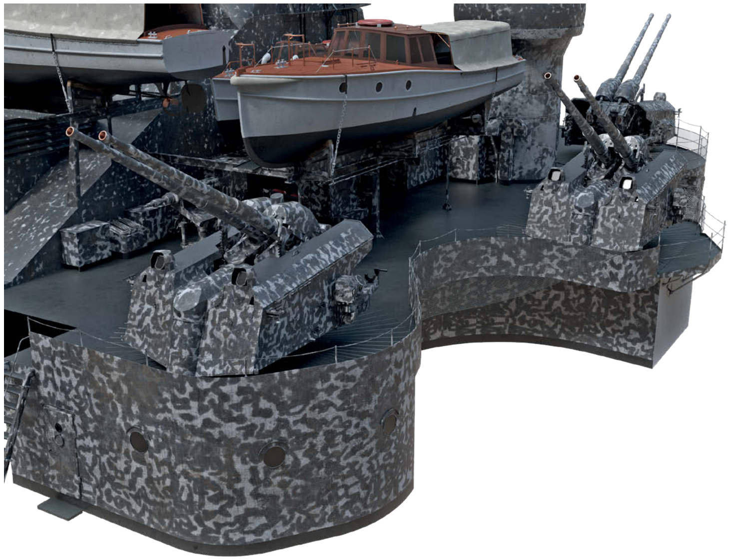

February 1942

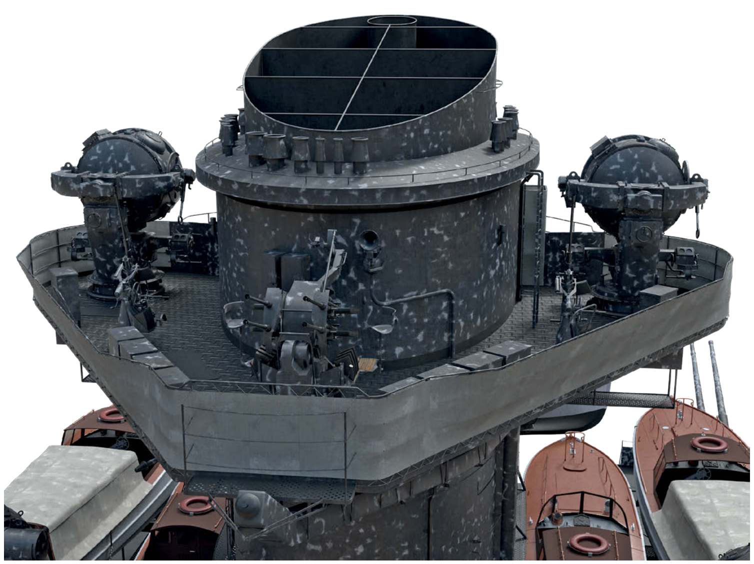

February 1942

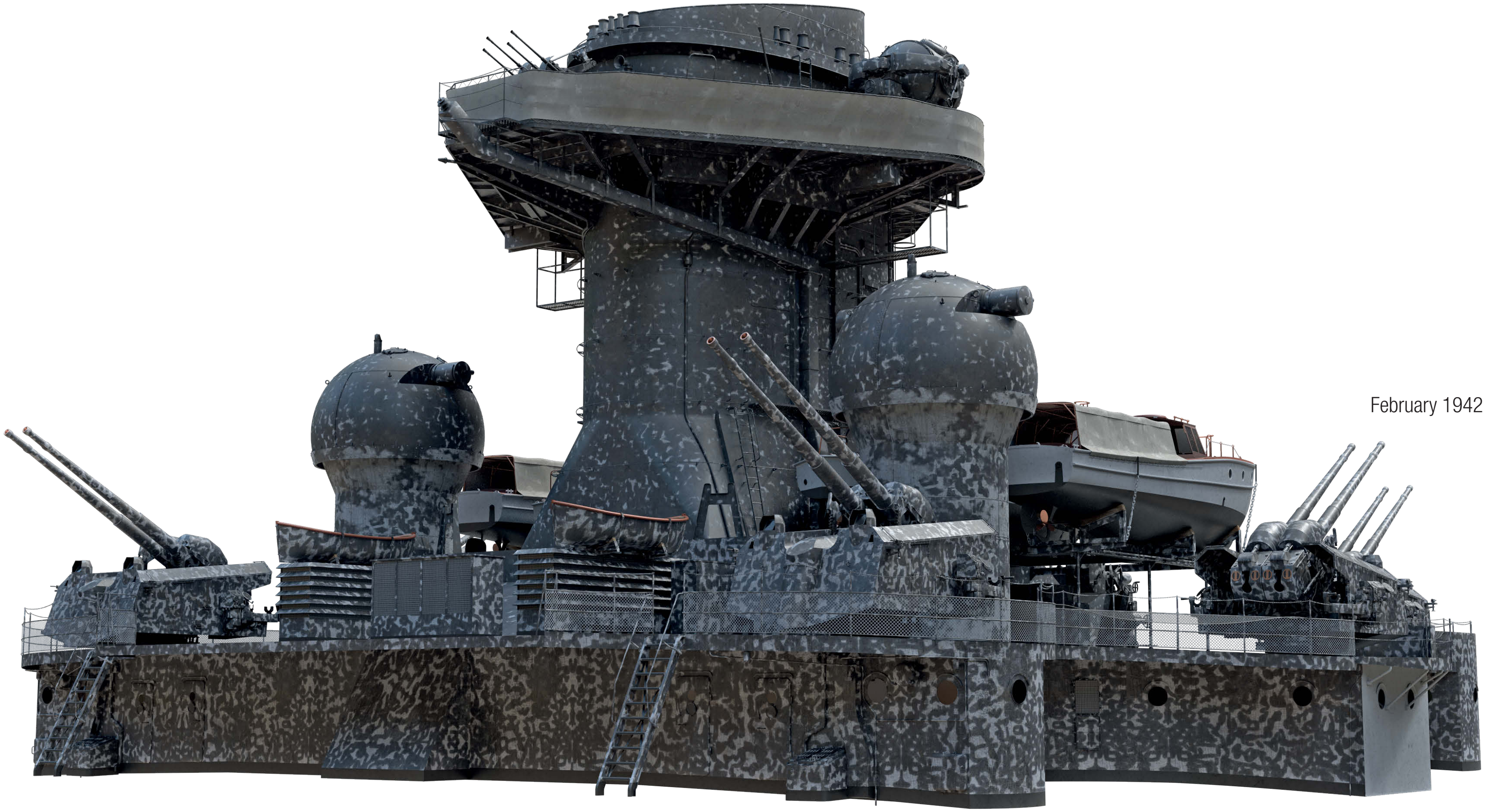

February 1942

early 1943

late 1943

late 1943

MIDDLE SUPERSTRUCTURE (1/200 SCALE)

C2/4 RIGHT PROFILE, 1943

C2/5 LEFT PROFILE, 1943

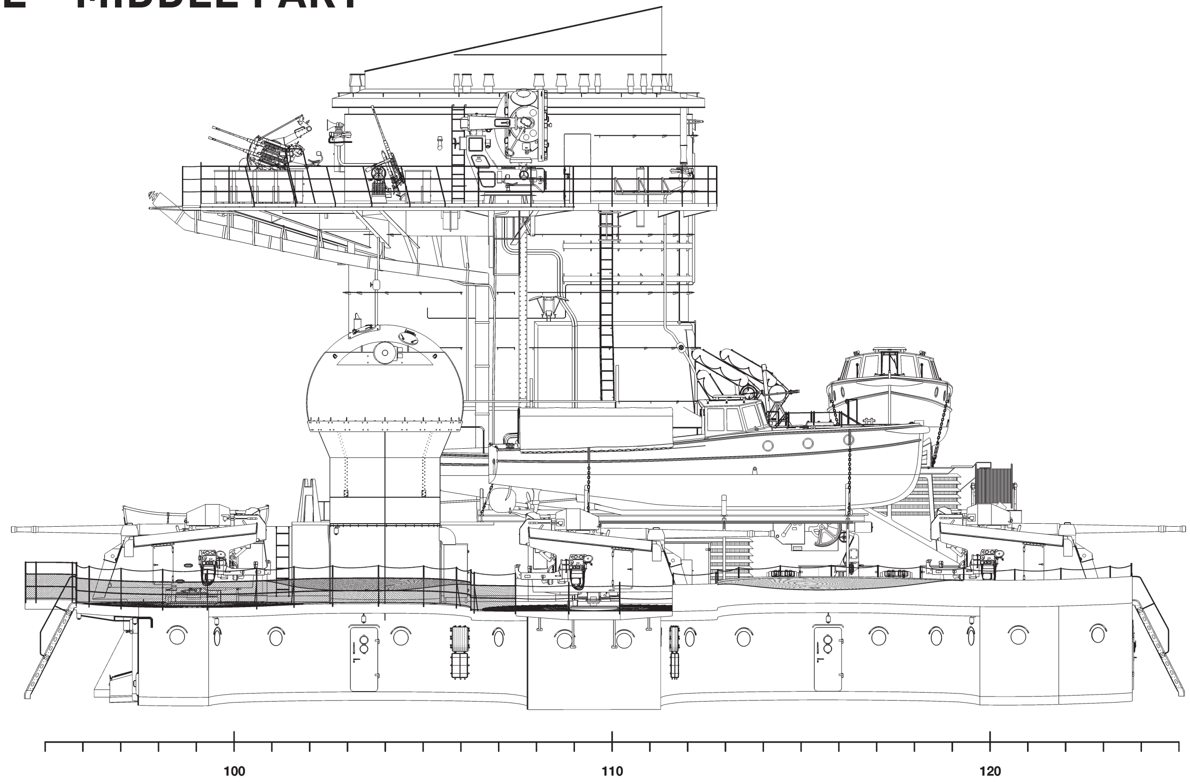

C2/4

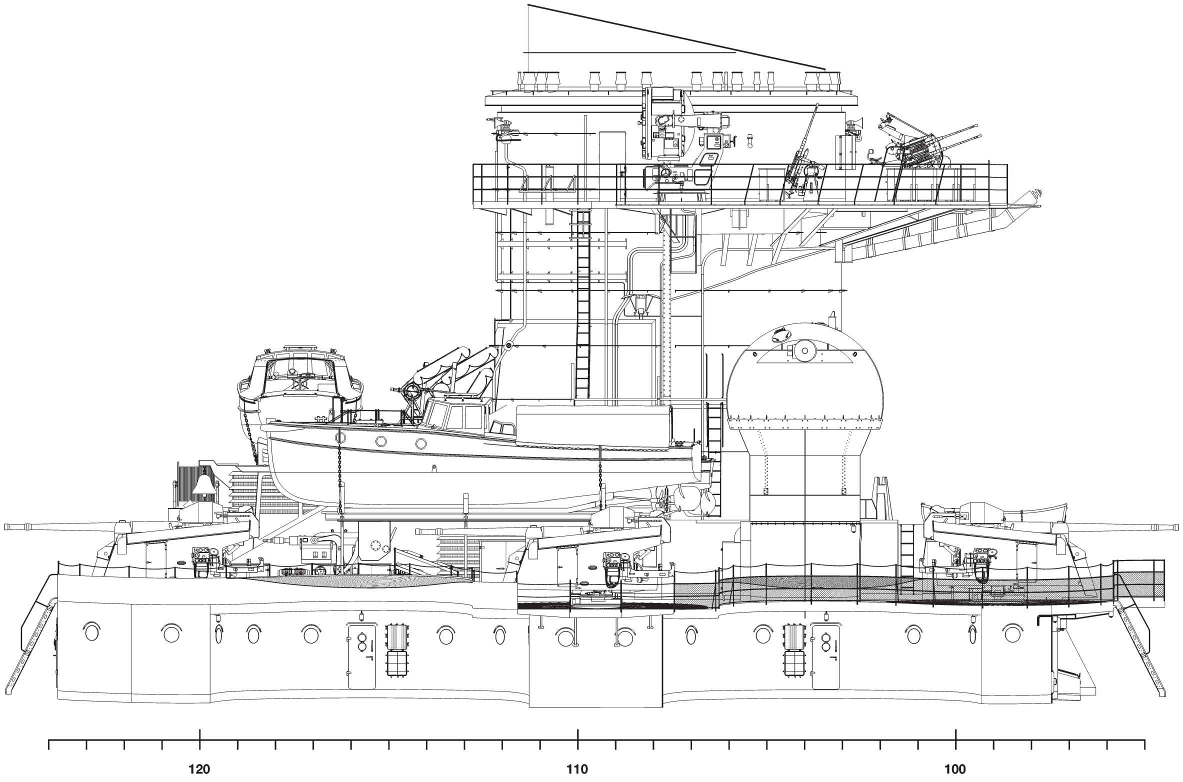

C2/5

C2/6 FRONT VIEW, 1943
C2/7 BACK VIEW, 1943

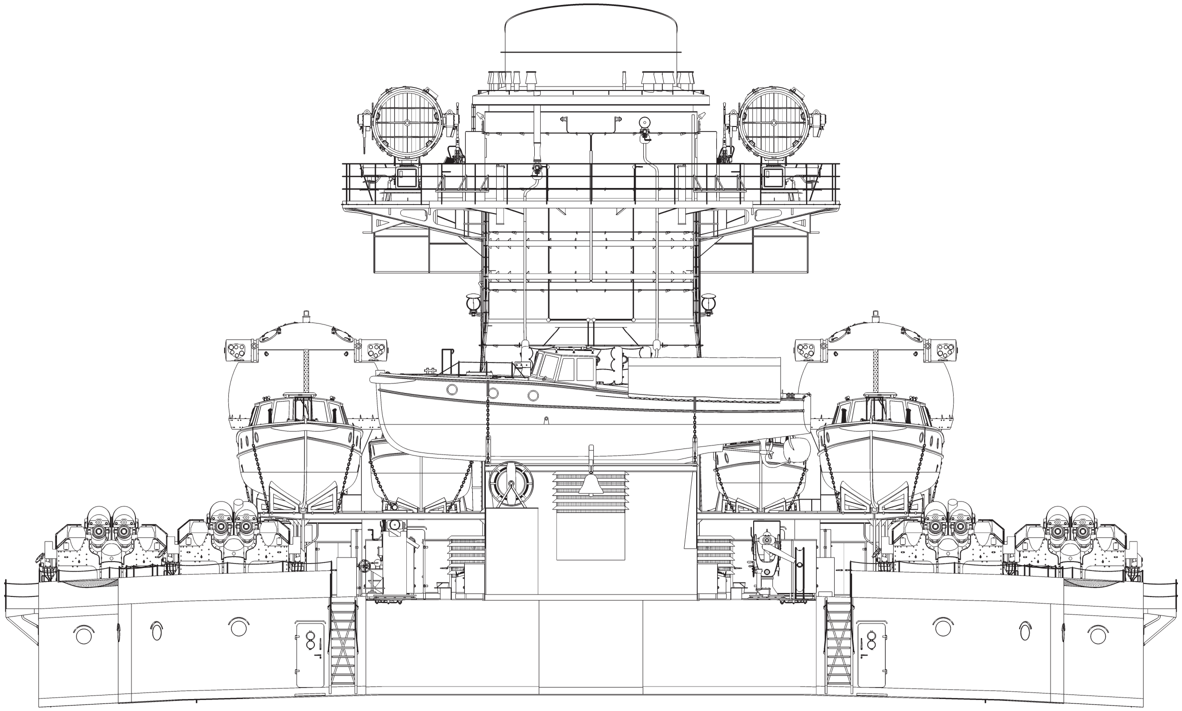

C2/6

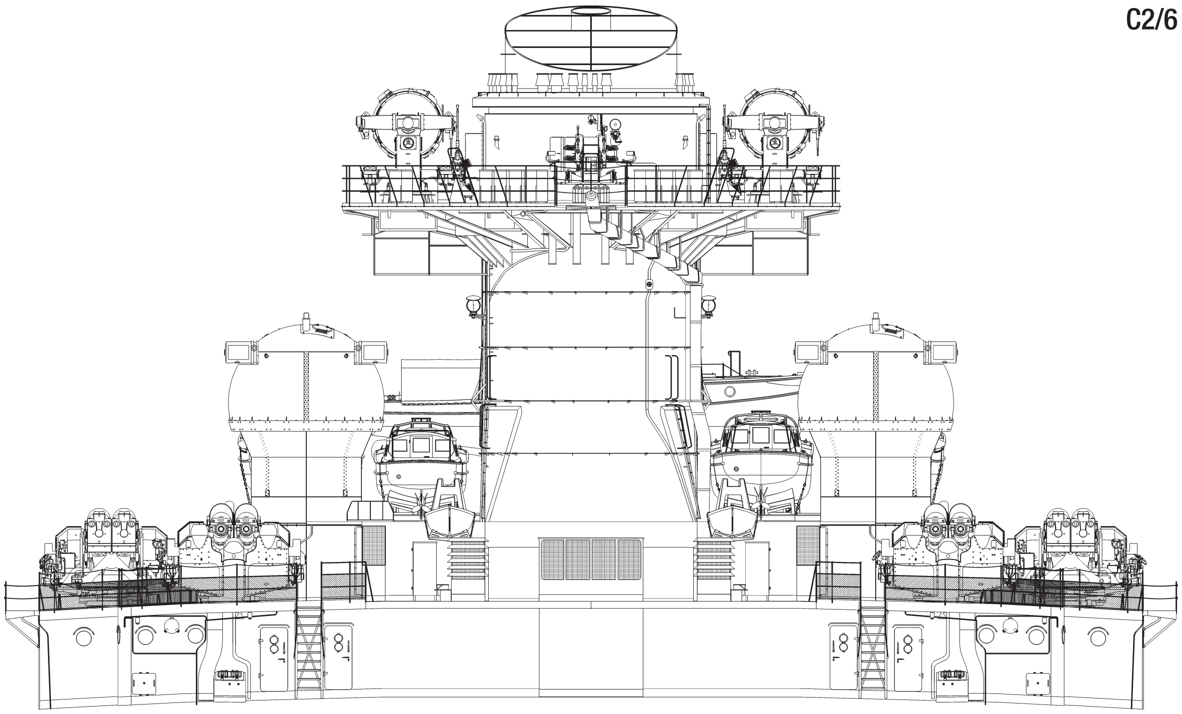

C2/7

MIDDLE SUPERSTRUCTURE (1/200 SCALE)

C2/8 FRONT VIEW WITH BOATS AND 10.5CM GUNS OMITTED FOR CLARITY, 1943 (FRAGMENT)

1 Additional shield around the 10.5cm mounts (fitted on both sides in mid-1941)
2 Life raft (added in mid-1941)
3 Additional compartment on main deck level (added on both sides in mid-1941)

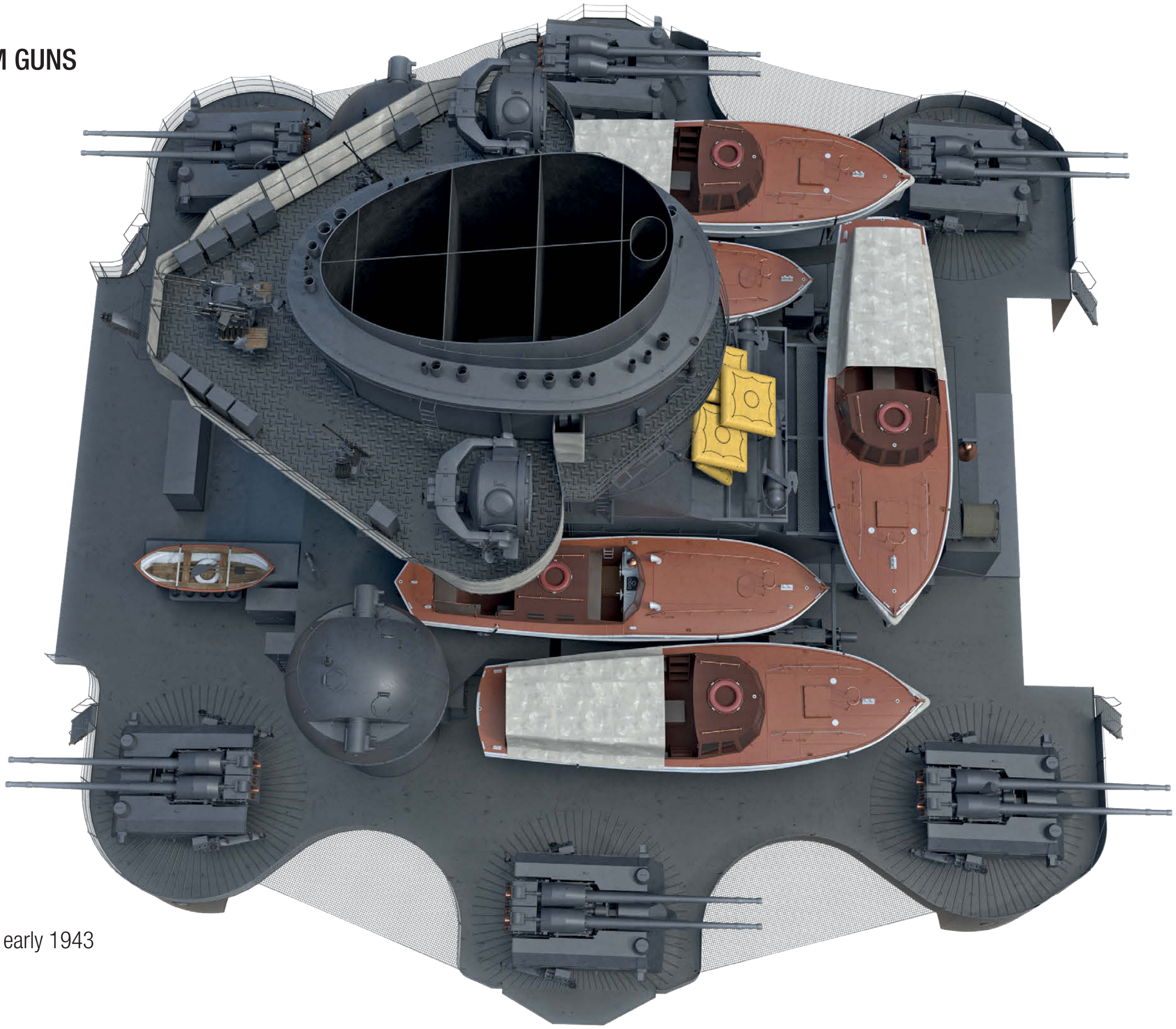

early 1943

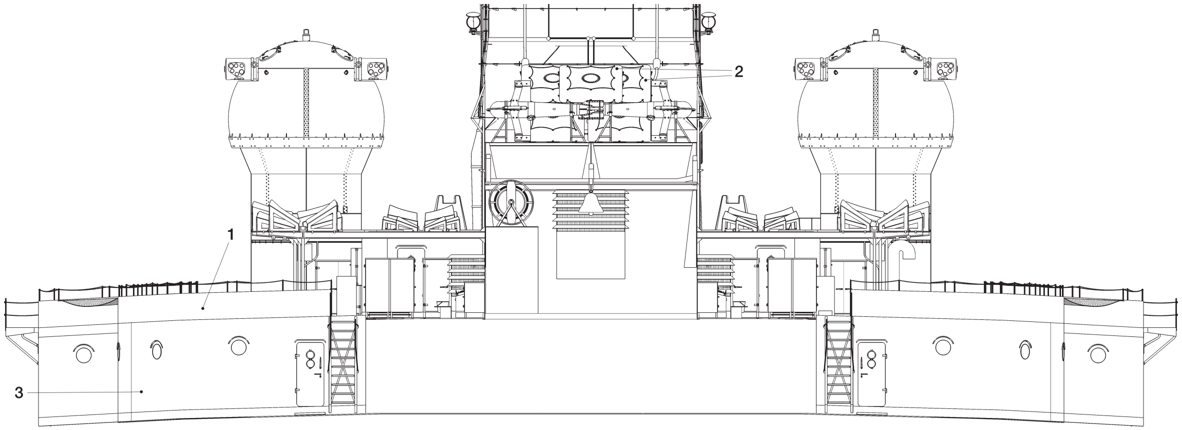

C2/8

C2/9 MAIN DECK LEVEL, 1941 – PLAN

1 Midshipmen's washroom
2 Electrical storeroom
3 Motorboat storeroom
4 Admiral's and commander's kitchen
5 Officers' kitchen
6 Potato storage room
7 AA artillery director switch room
8 Stairs to deck above
9 Hatchway to deck below
10 Passage
11 10.5cm mount support
12 10.5cm and 15cm ammunition hoist
13 Funnel uptake of boiler room no. 1
14 Funnel uptake of boiler room no. 2
15 Funnel uptake of boiler room no. 3
16 Funnel uptake of auxiliary boiler room
17 Vent of boiler room no. 1
18 Vent of boiler room no. 2

C2/10 MAIN DECK LEVEL, 1943 – PLAN (STARBOARD SIDE FRAGMENT)

1 Expanded superstructure border (from mid-1941)

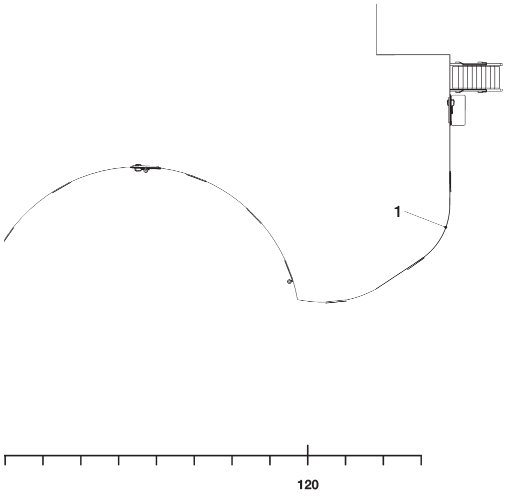

C2/10

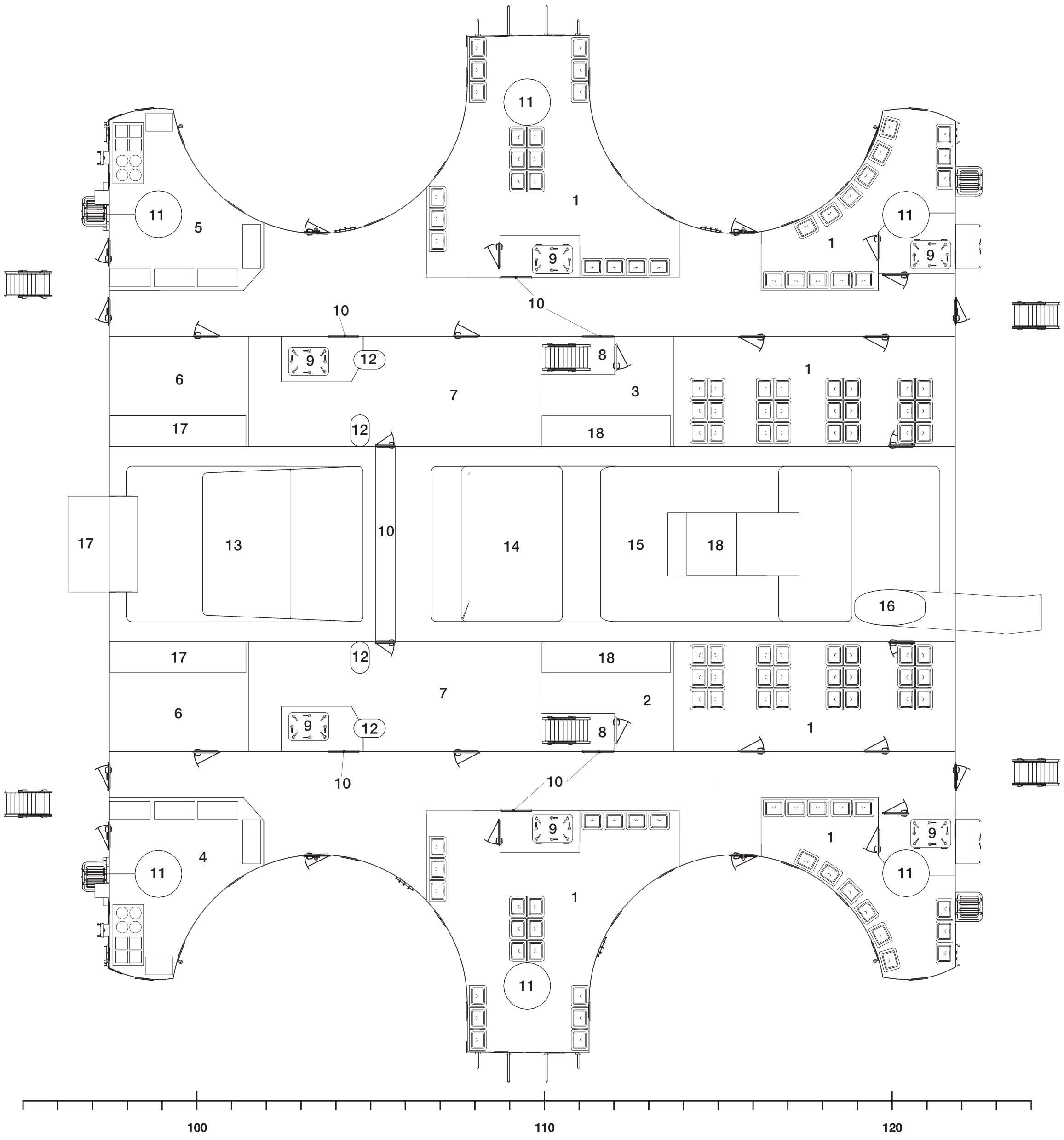

C2/9

MIDDLE SUPERSTRUCTURE (1/200 SCALE)

C2/11 SUPERSTRUCTURE DECK LEVEL, 1941 – PLAN

1 Shelter of ammunition supply crew
2 SL-6 director base
3 Funnel uptake of boiler room no. 1
4 Funnel uptake of boiler room no. 2
5 Funnel uptake of boiler room no. 3
6 Funnel uptake of auxiliary boiler room
7 Vent of boiler room no. 1
8 Vent of boiler room no. 2
9 Deck hatch
10 10.5cm ammunition hoist
11 15cm practice loading machine
12 10.5cm practice loading machine
13 Skylight
14 10.5cm mount
15 Boat cradle support
16 Bucket stowage
17 Net for empty 10.5cm ammunition cases

C2/12 SUPERSTRUCTURE DECK LEVEL, 1943 – PLAN (FRAGMENT)

1 Expanded superstructure border (from mid-1941)

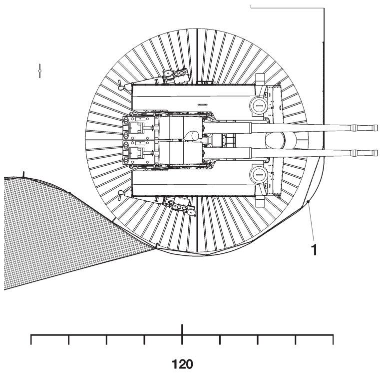

C2/12

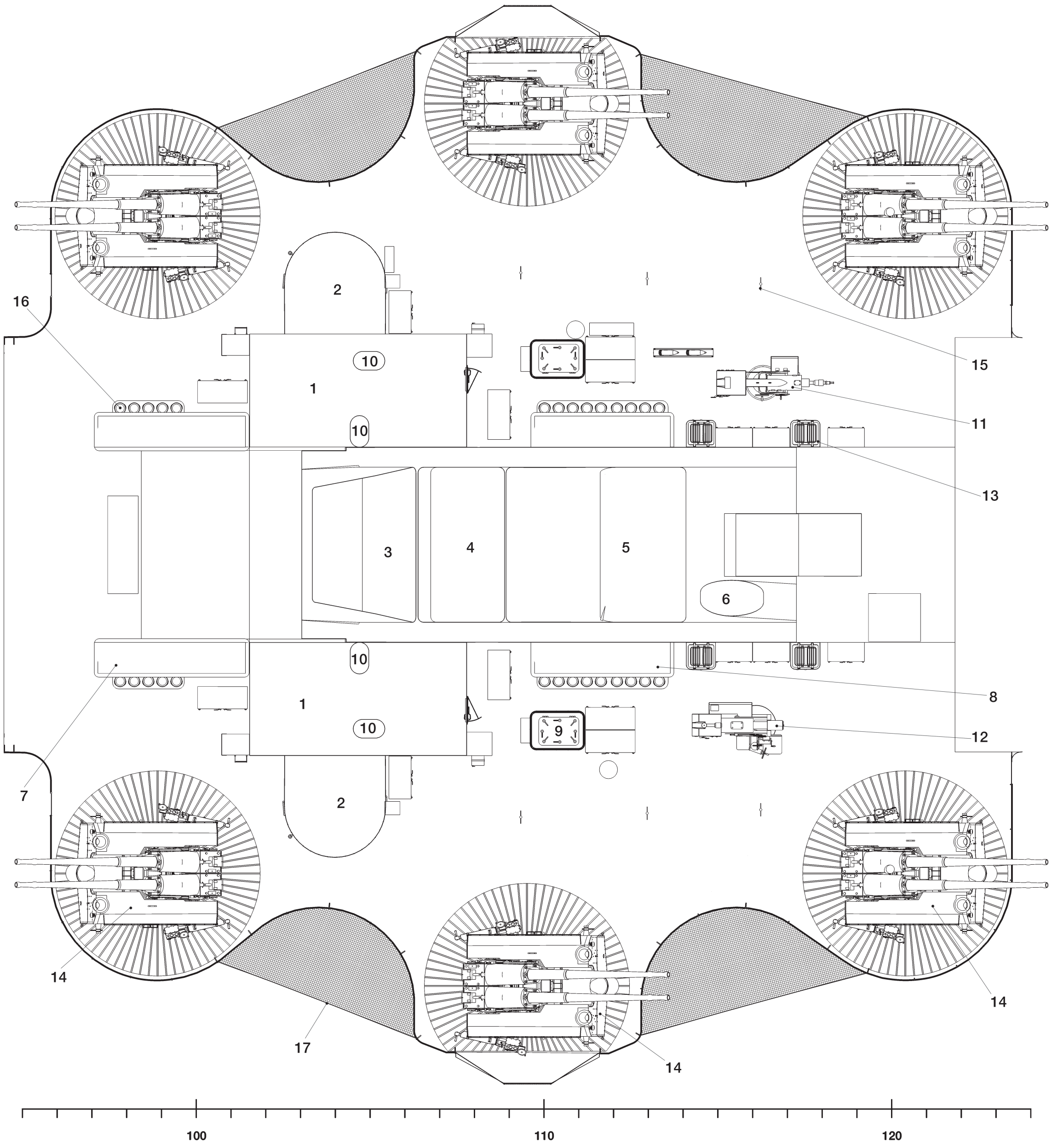

C2/11

C2/13 BOAT STOWAGE LEVEL WITH BOATS OMITTED FOR CLARITY, EARLY 1939 – PLAN (FRAGMENT)

1 Cradle for an additional cutter (removed around early 1940)
2 Outer boat cradle catwalk (removed in mid-1939)

C2/14 BOAT STOWAGE LEVEL WITH BOATS OMITTED FOR CLARITY, 1941 – PLAN

1 Boat cradle
2 SL-6 director
3 Funnel uptake of boiler room no. 1
4 Funnel uptake of boiler room no. 2
5 Funnel uptake of boiler room no. 3
6 Funnel uptake of auxiliary boiler room
7 Vent of boiler room no. 1
8 Vent of boiler room no. 2
9 Paravane on cradle (added around early 1940)
10 Catwalk
11 Main crane arm cradle
12 Rope reel
13 Ship's bell
14 Ladder
15 Inflatable raft container

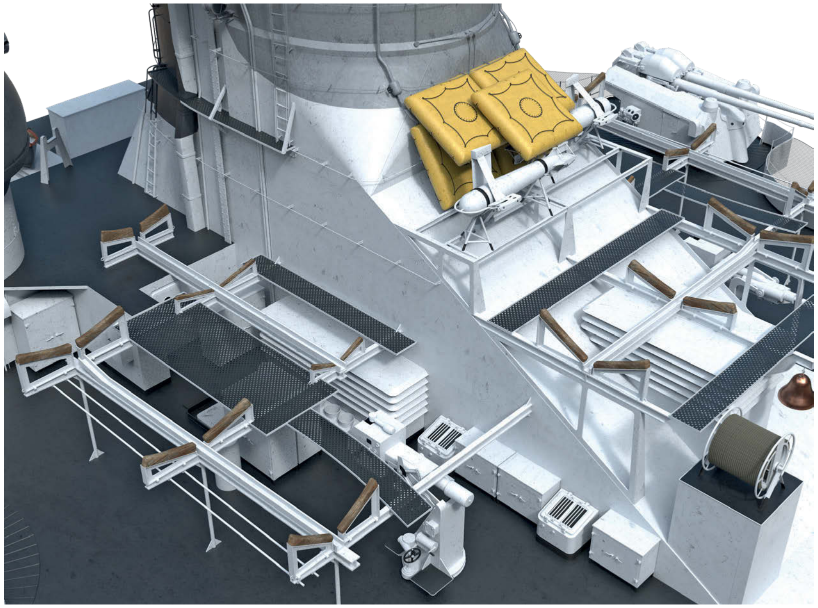

late 1943

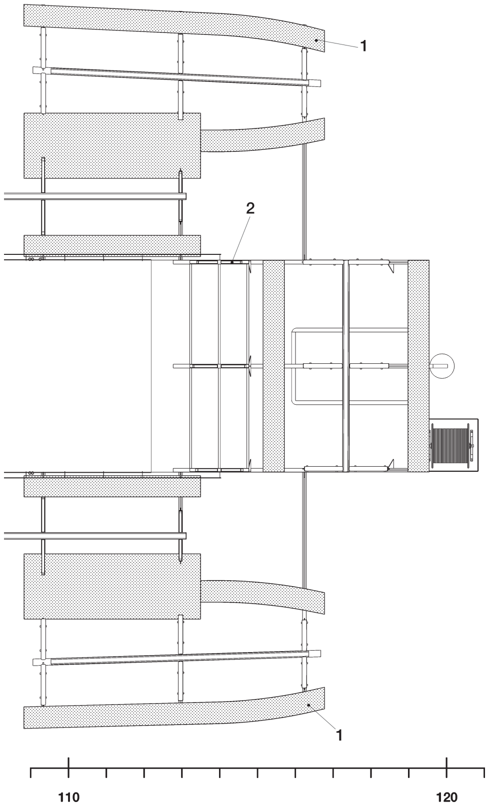

C2/13

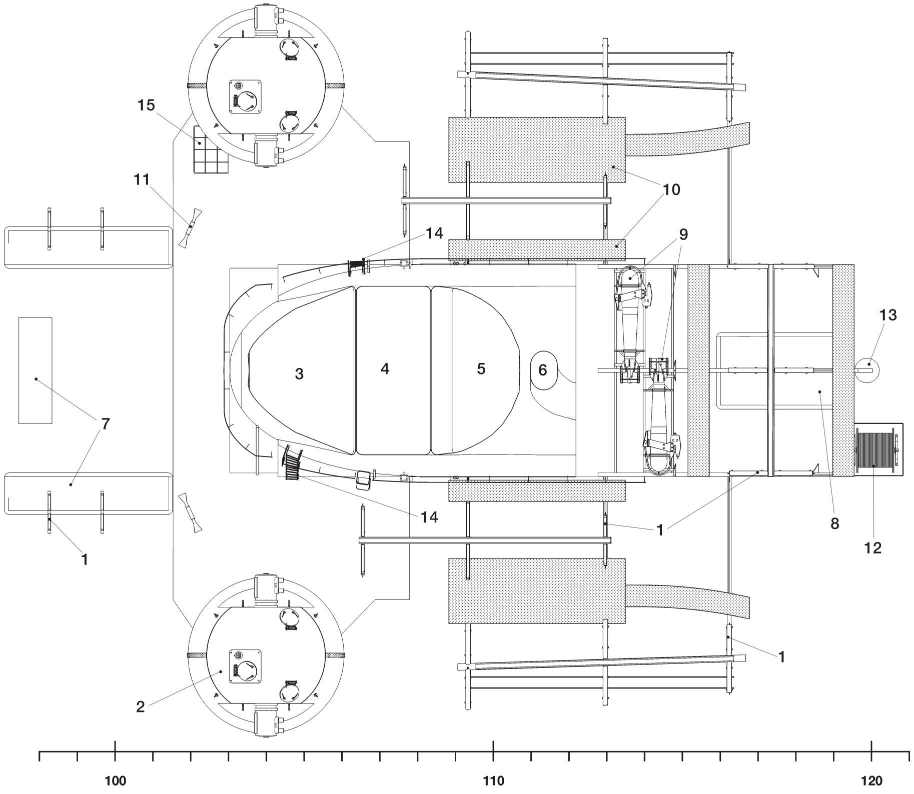

C2/14

MIDDLE SUPERSTRUCTURE (1/200 SCALE)

C2/15 BOAT STOWAGE LEVEL, 1941 – PLAN

1 Admiral's boat
2 Transportation boat
3 Motor pinnace
4 Dinghy

C2/16 MIDDLE PORTION OF THE FUNNEL – PLAN

1 Loudspeaker
2 Wire antenna duct
3 Ladder
4 Foot rail
5 Searchlight service platform

C2/17 FUNNEL PLATFORM AND CAP, EARLY 1939 – PLAN

1 Mainmast (relocated aft in mid-1939)
2 Funnel cap (modified in mid-1939)
3 Exhaust pipes (modified in mid-1939)
4 2cm C/30 mount (replaced with C/38 mount in January 1941)
5 Signal lamp (relocated in mid-1939)
6 Speed indicator for friendly ships (relocated in mid-1939)
7 Wire antenna duct (modified in mid-1939)

C2/18 FUNNEL PLATFORM, EARLY 1939 – BOTTOM VIEW

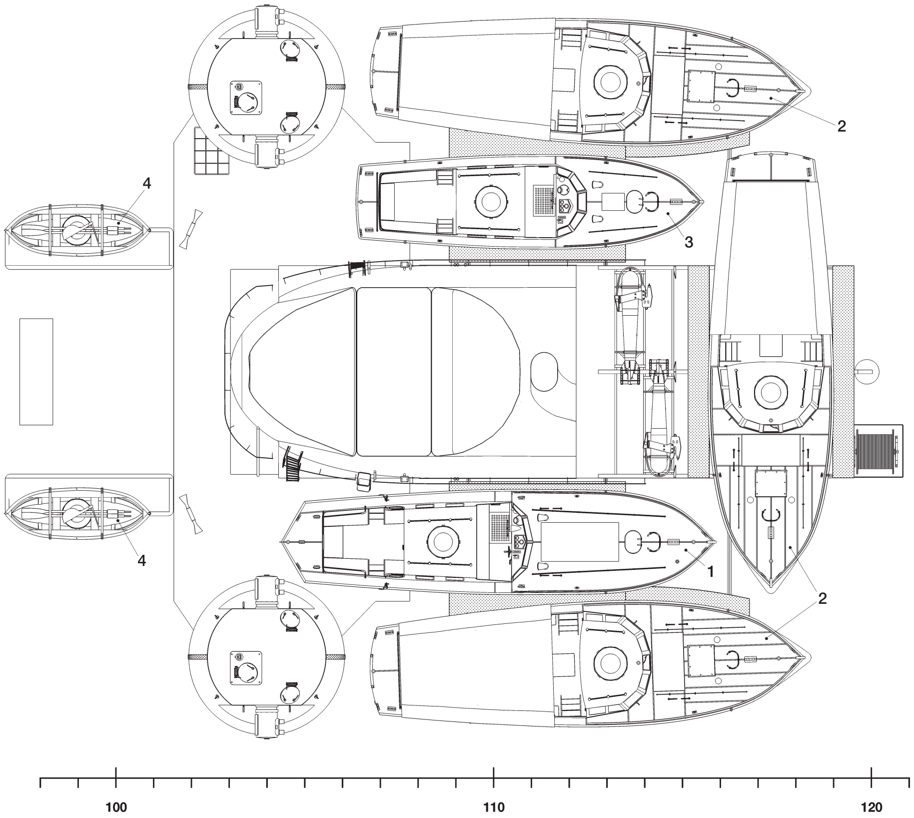

C2/15

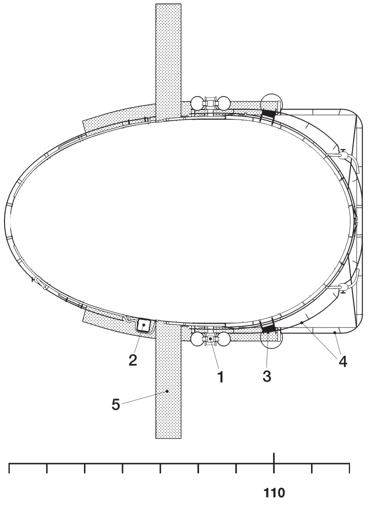

C2/16

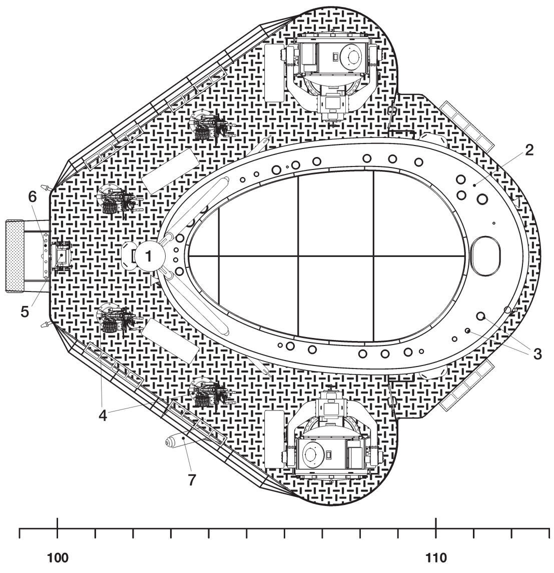

C2/17

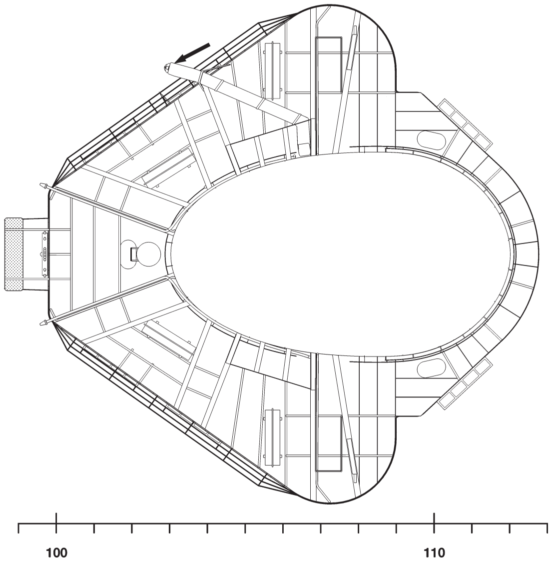

C2/18

C2/19 FUNNEL PLATFORM AND CAP, 1941 – PLAN

1 Wire antenna duct (modified in mid-1939)
2 Funnel cap (modified in mid-1939)
3 Exhaust pipes (modified in mid-1939)
4 2cm C/38 mount (replaced C/30 mount in January 1941)
5 2cm C/38 mount (replaced C/30 mount in January 1941, relocated in late 1941)
6 Searchlight
7 Ladder (added on starboard side in mid-1939)

C2/21 FUNNEL PLATFORM, 1943 – PLAN

1 2cm *Vierling* mount (replaced a pair of single mounts in late 1941)
2 2cm ammunition locker (added in mid-1942)
3 2cm gun tube (added in mid-1942)
4 Enlarged platform (from mid-1941)
5 Steam whistle

C2/20 FUNNEL PLATFORM, 1941 – BOTTOM VIEW

early 1943

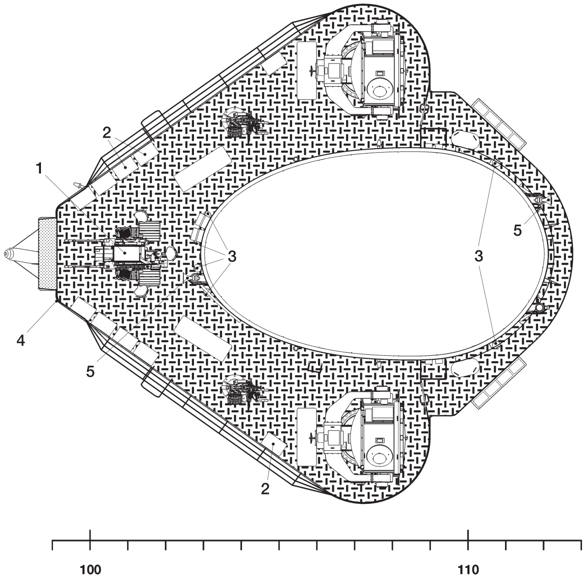

C2/21

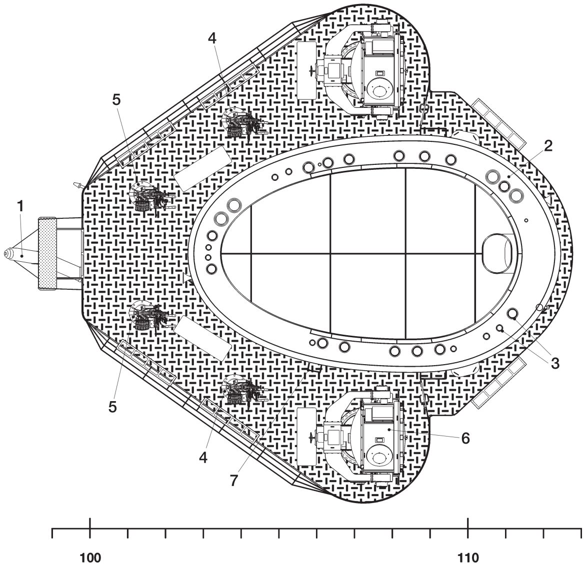

C2/19

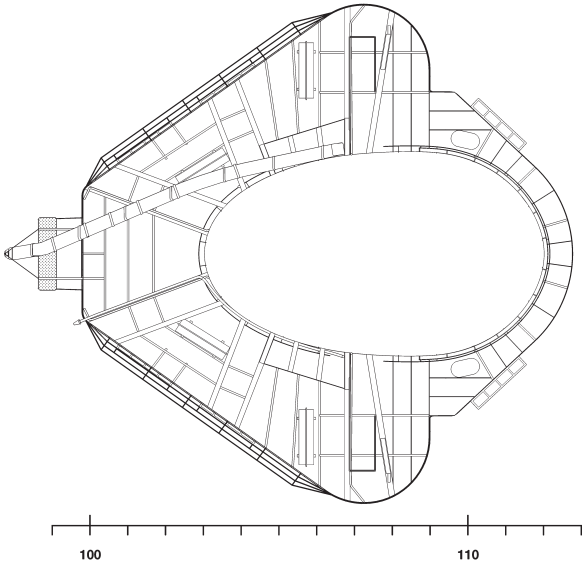

C2/20

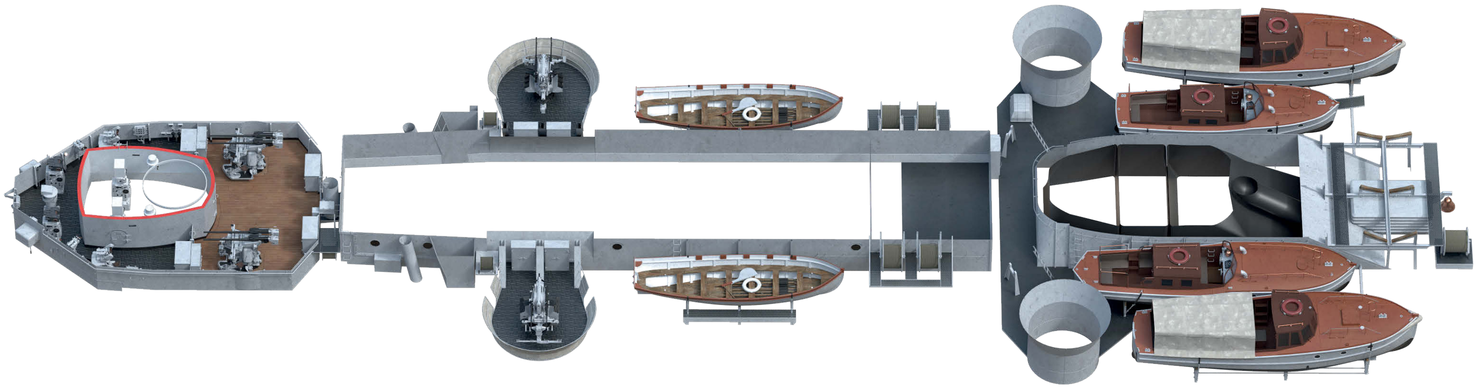

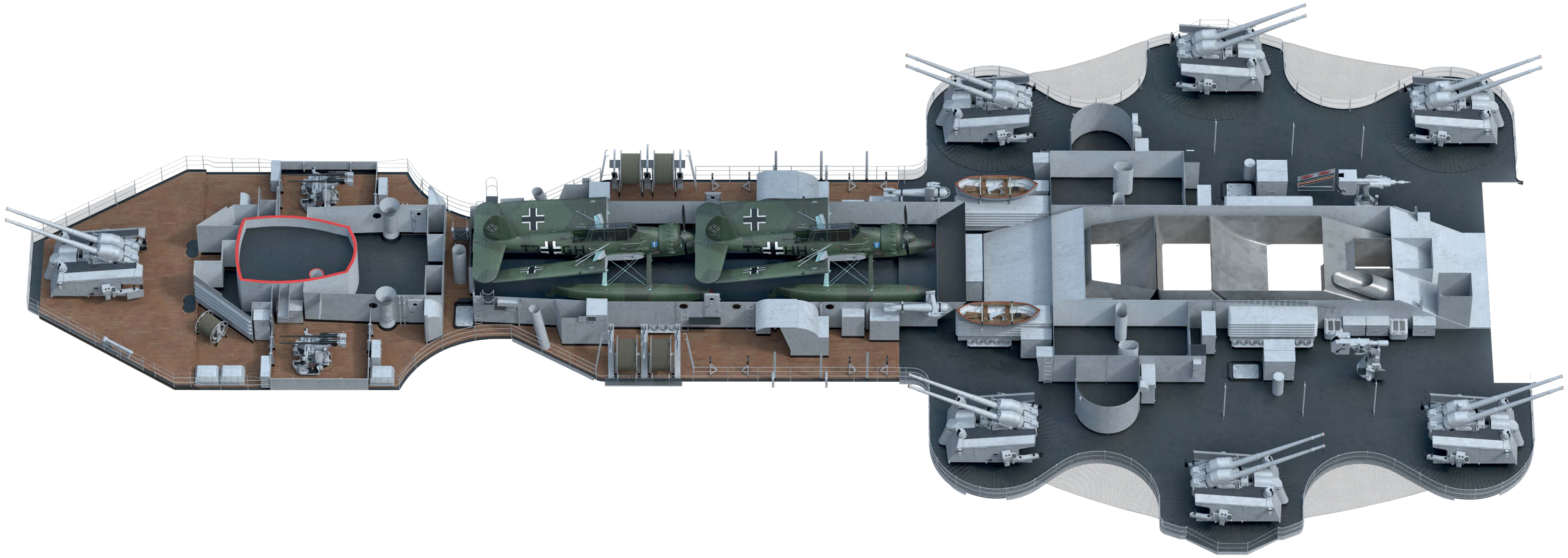

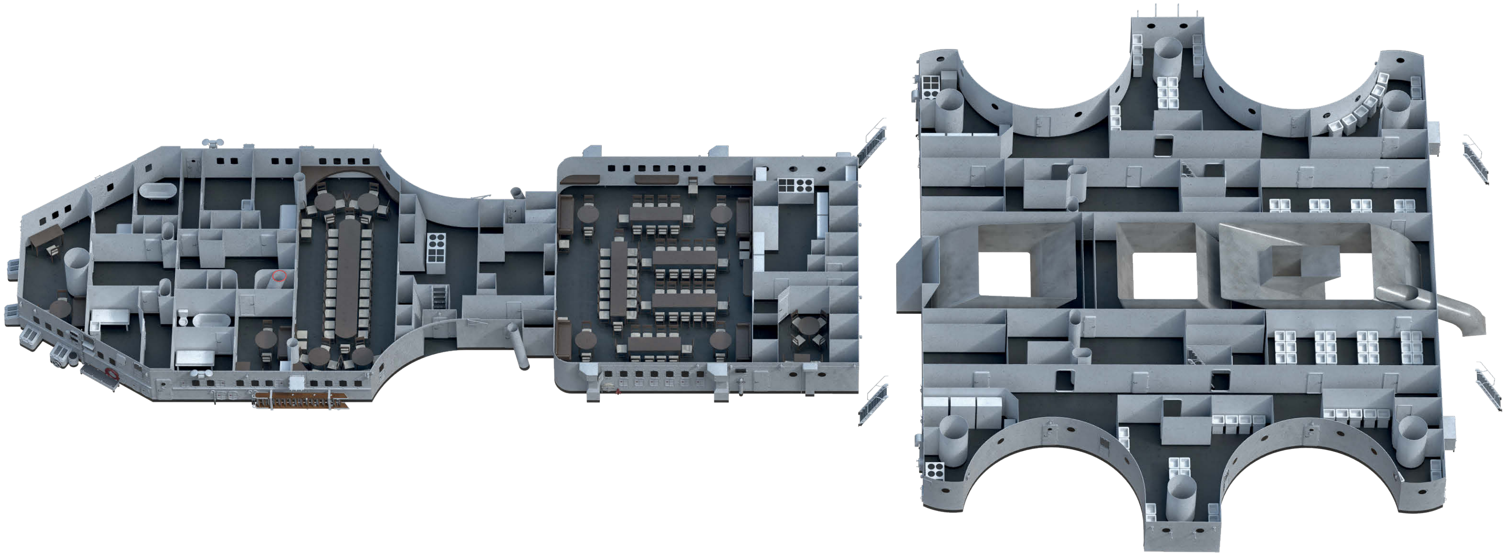

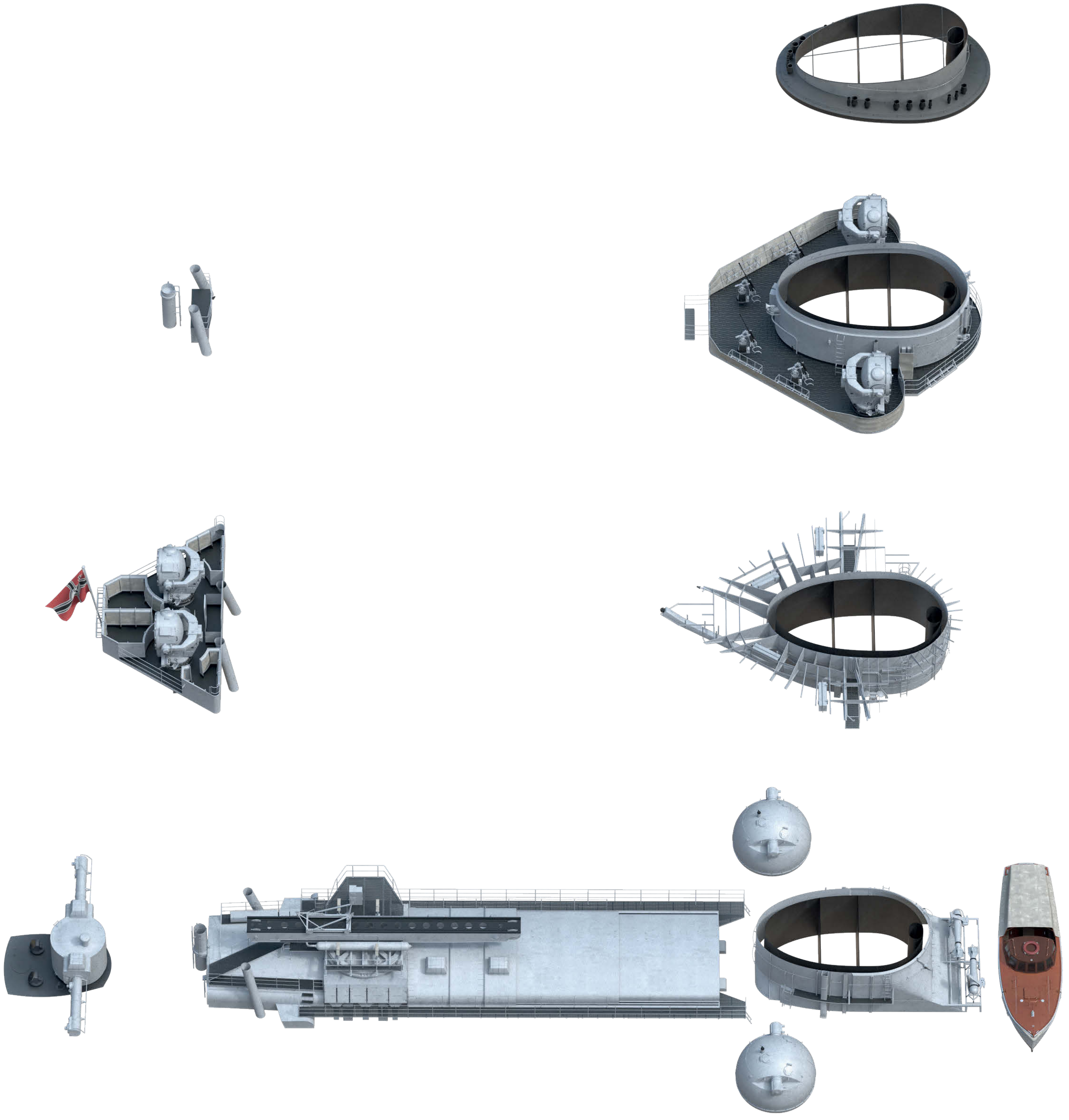

AFT SUPERSTRUCTURE (1/200 SCALE)

C3/1 RIGHT PROFILE, JANUARY 1939

C3/2 LEFT PROFILE, JANUARY 1939

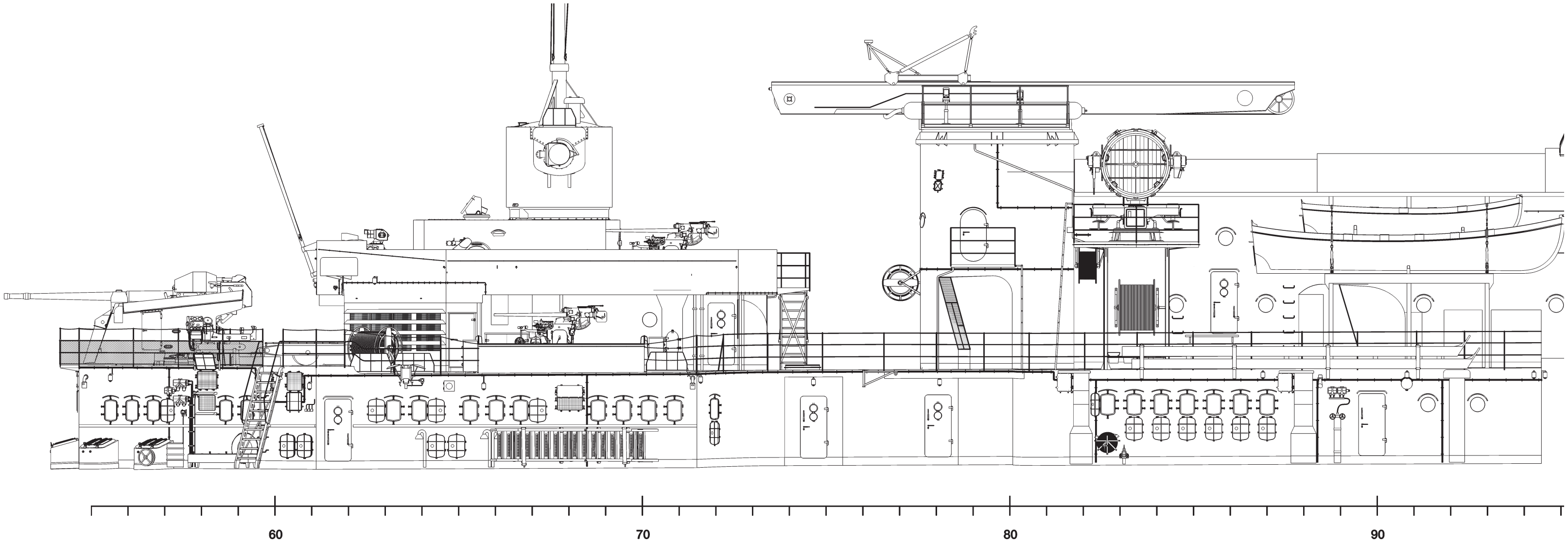

C3/1

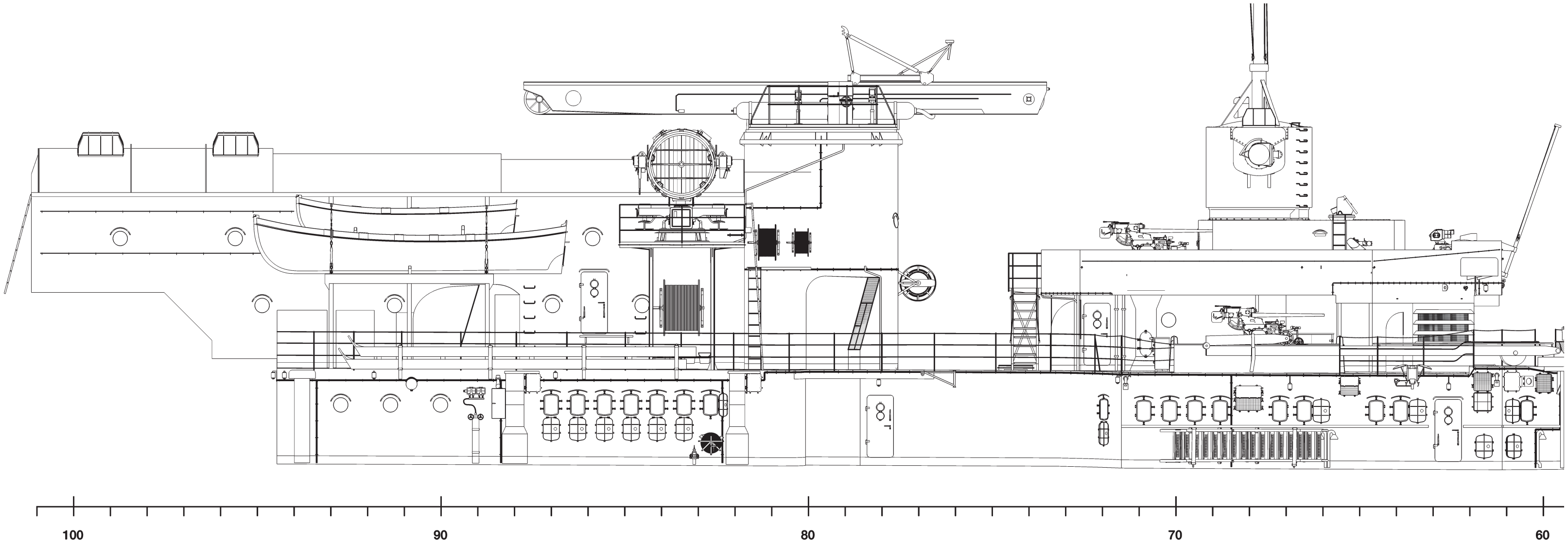

C3/2

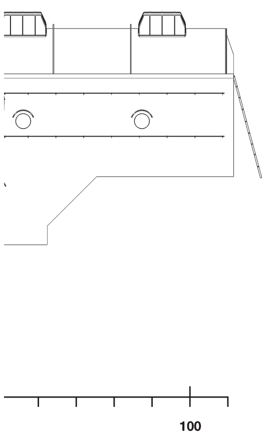

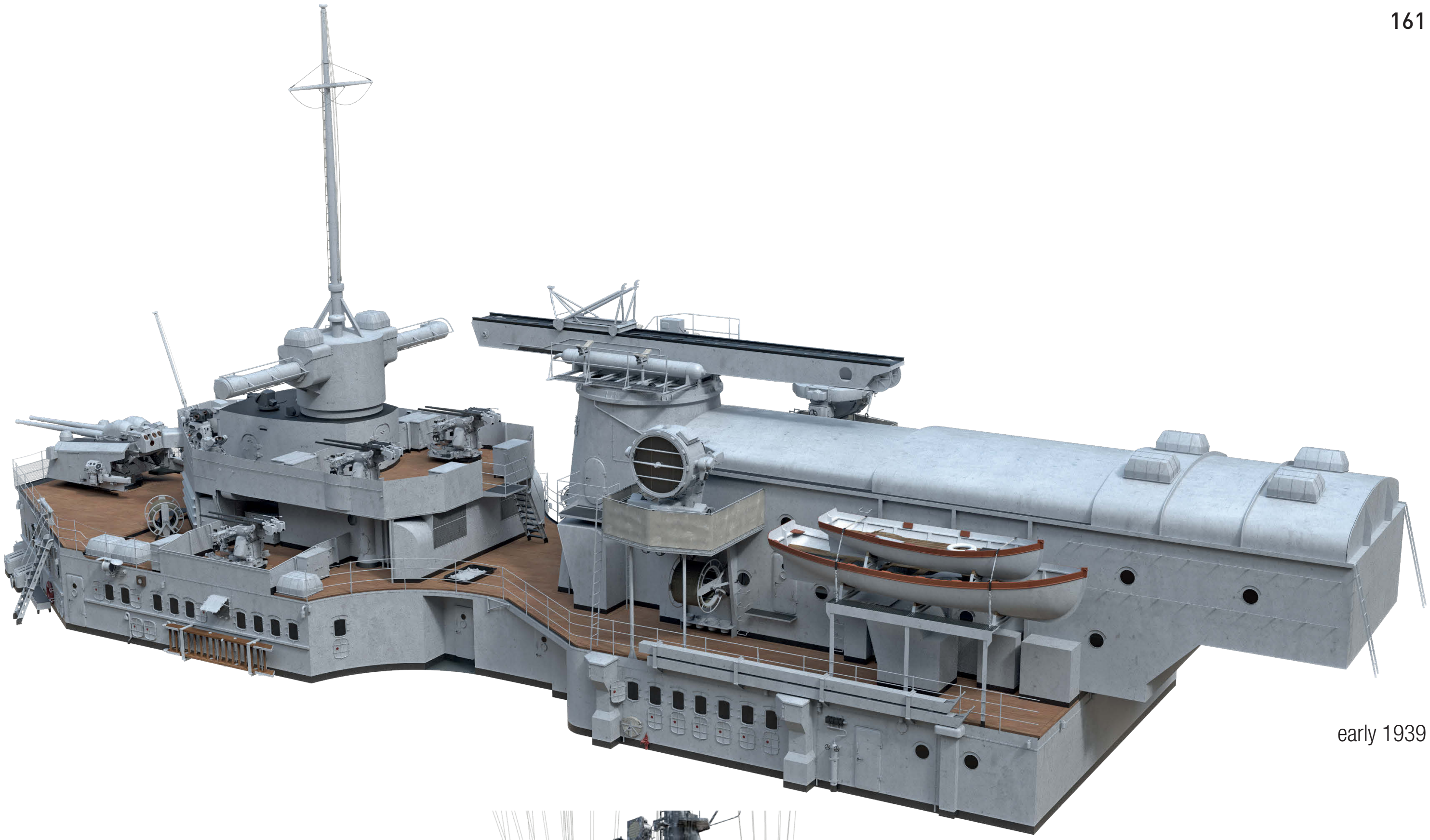

early 1939

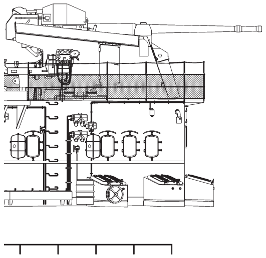

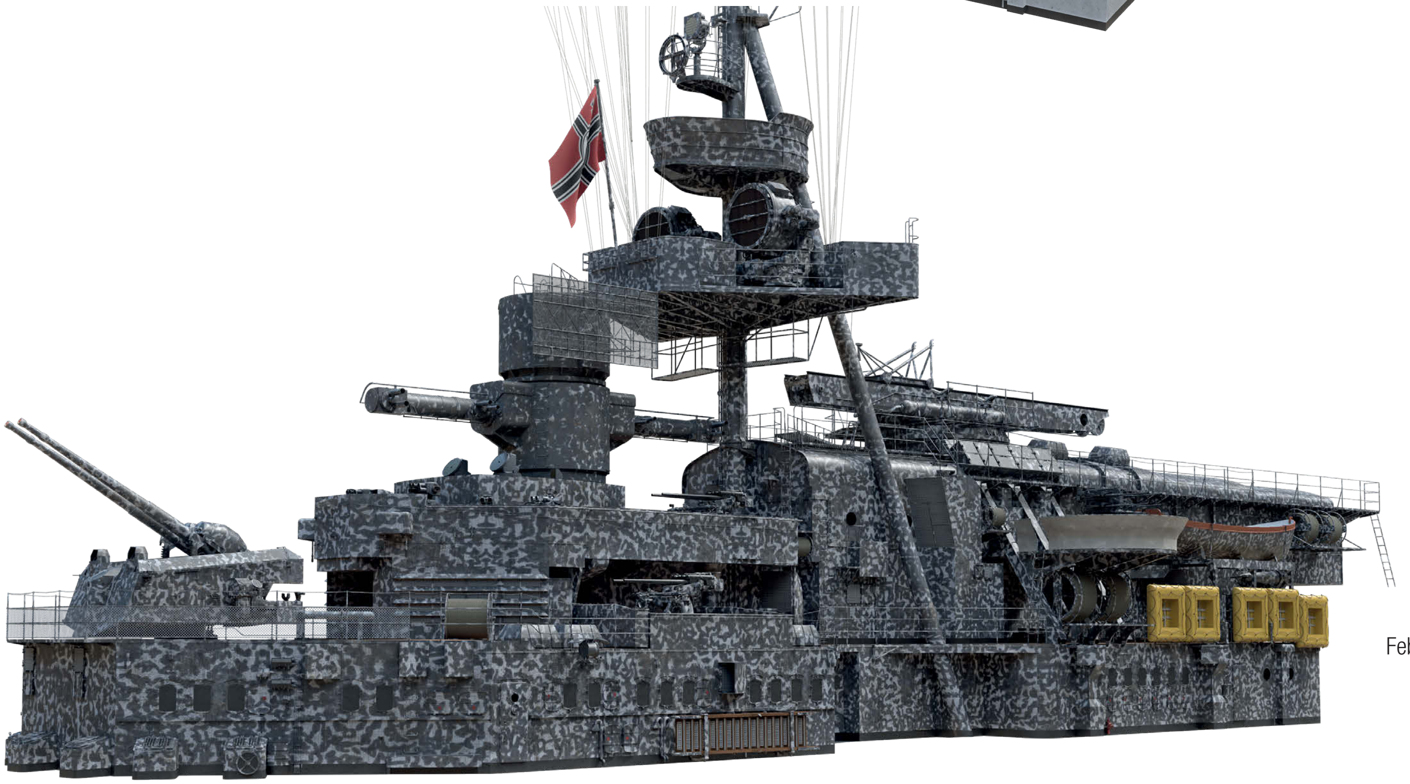

February 1942

AFT SUPERSTRUCTURE (1/200 SCALE)

C3/3 PLAN, JANUARY 1939

1 10.5cm Dopp L C/31gE twin mount (replaced with Dopp L C/31d twin mount in mid-1939)
2 Flag pole (removed in mid-1939)
3 Ladder (removed in mid-1939)
4 Folding aircraft crane serving the catapult on turret C (removed in March 1940)
5 Searchlight platform (removed from both sides in mid-1939)
6 Aircraft catapult (moved slightly forward to a new base in mid-1939)
7 Aircraft hangar for a single aircraft (rebuilt to house two aircraft in mid-1939)
8 Aircraft hangar sliding roof doors (reversed in mid-1939)

C3/4 RIGHT PROFILE, NOVEMBER 1941

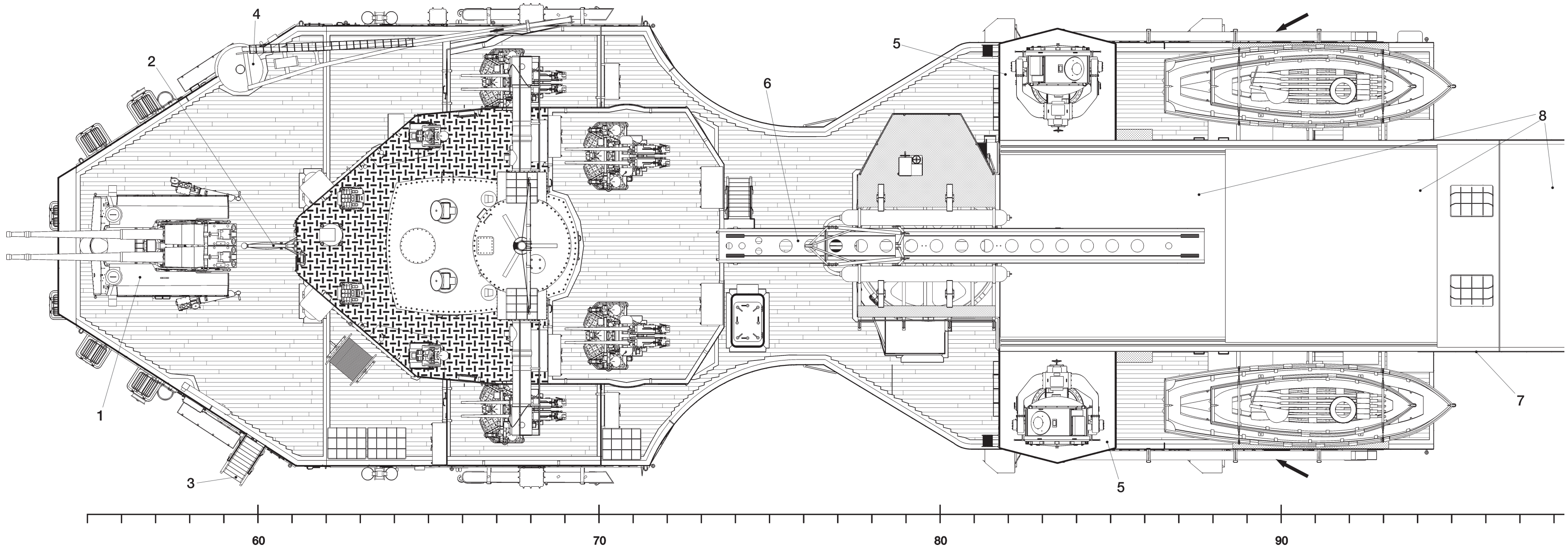

C3/3

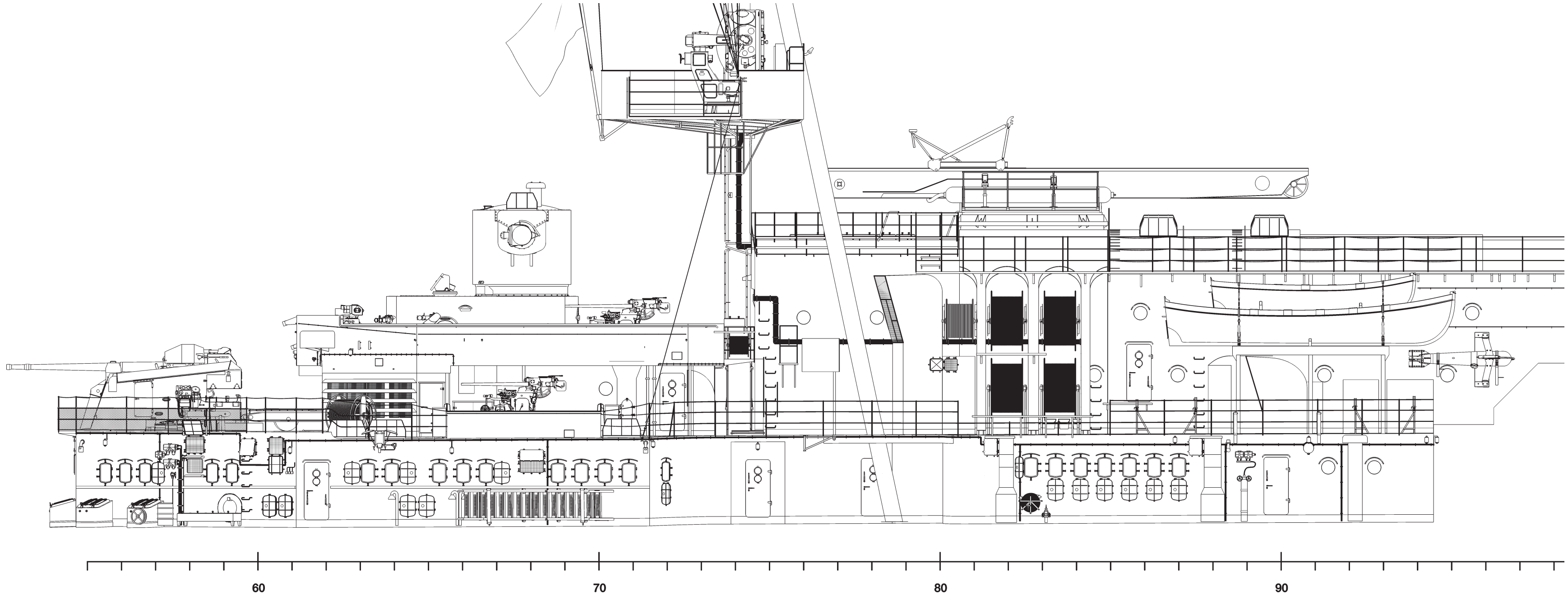

C3/4

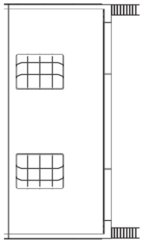

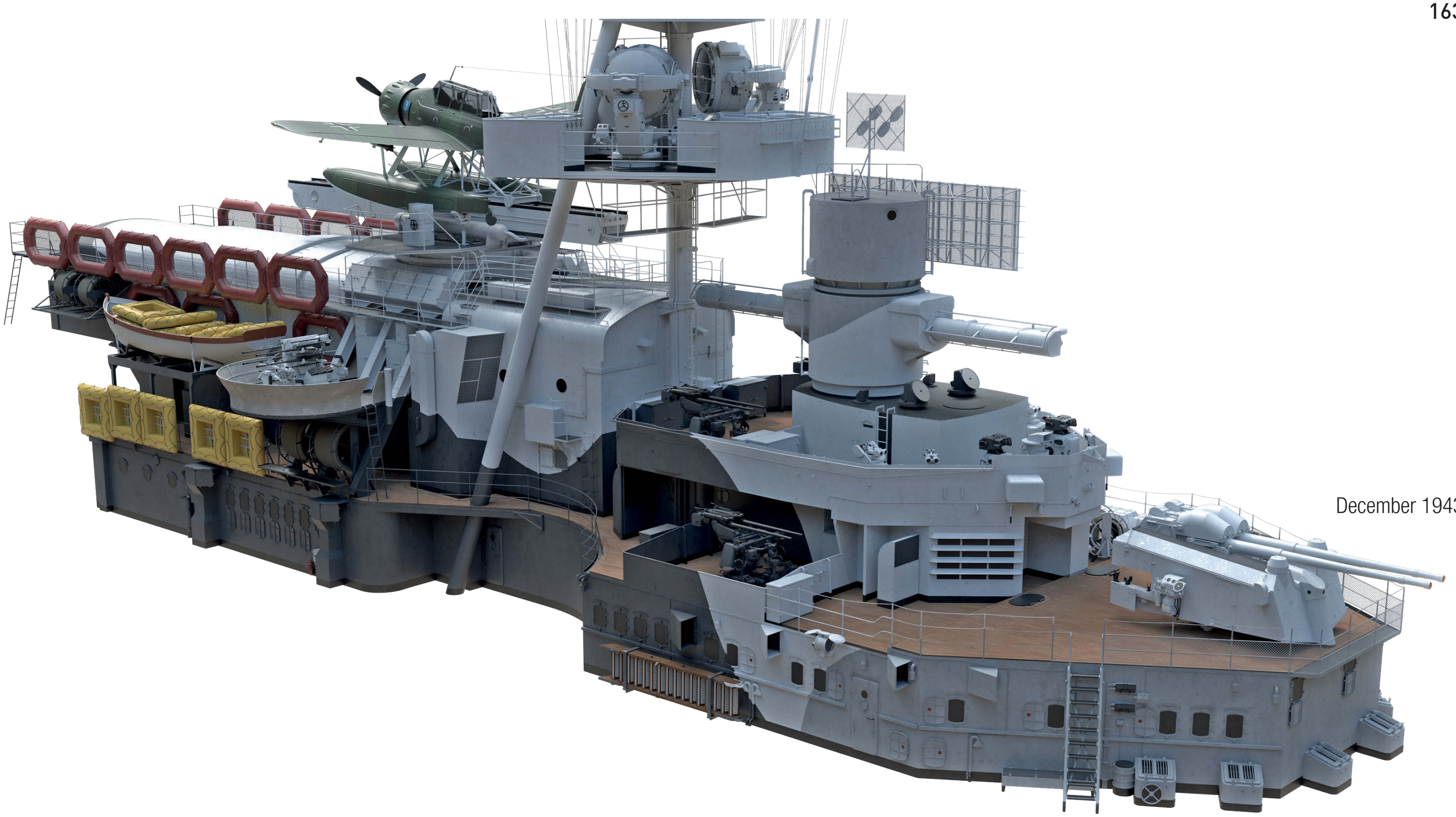

December 1943

100

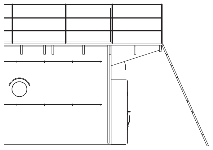

March 1943

100

AFT SUPERSTRUCTURE (1/200 SCALE)

C3/5 RIGHT PROFILE, DECEMBER 1943

C3/6 LEFT PROFILE, DECEMBER 1943

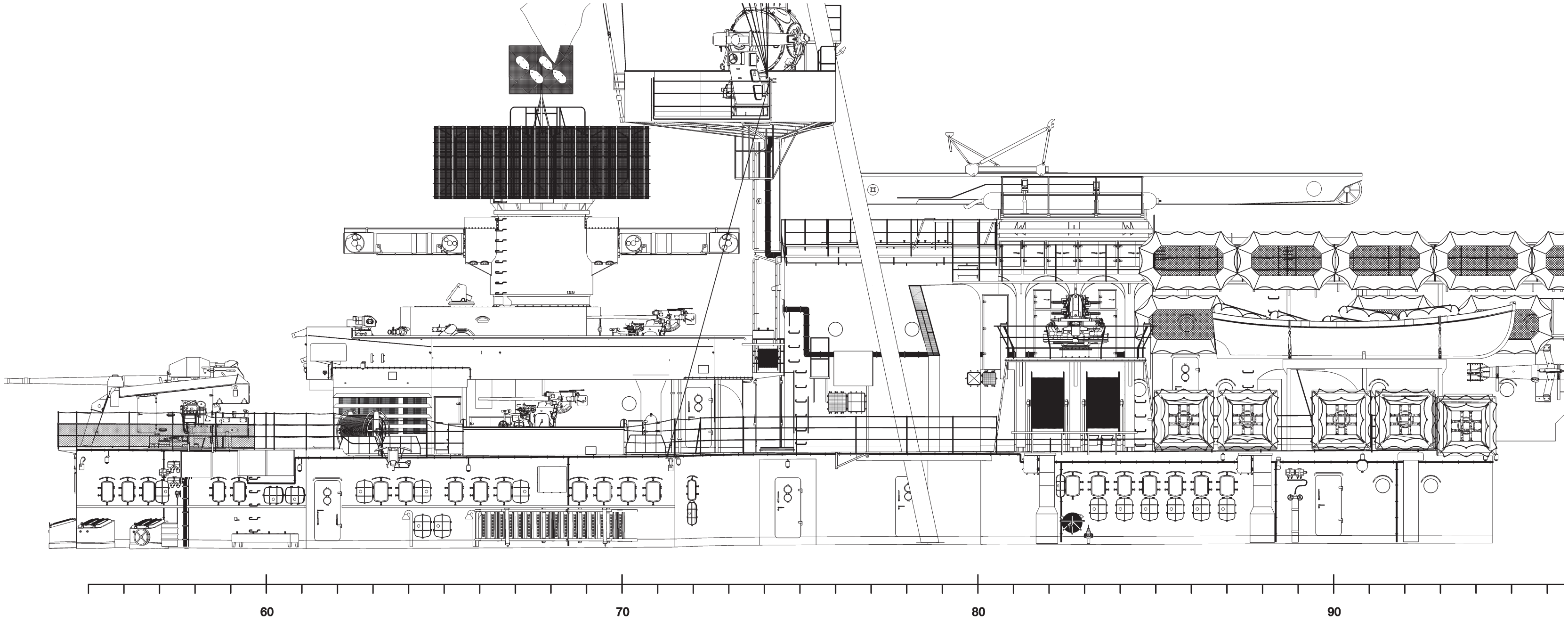

C3/5

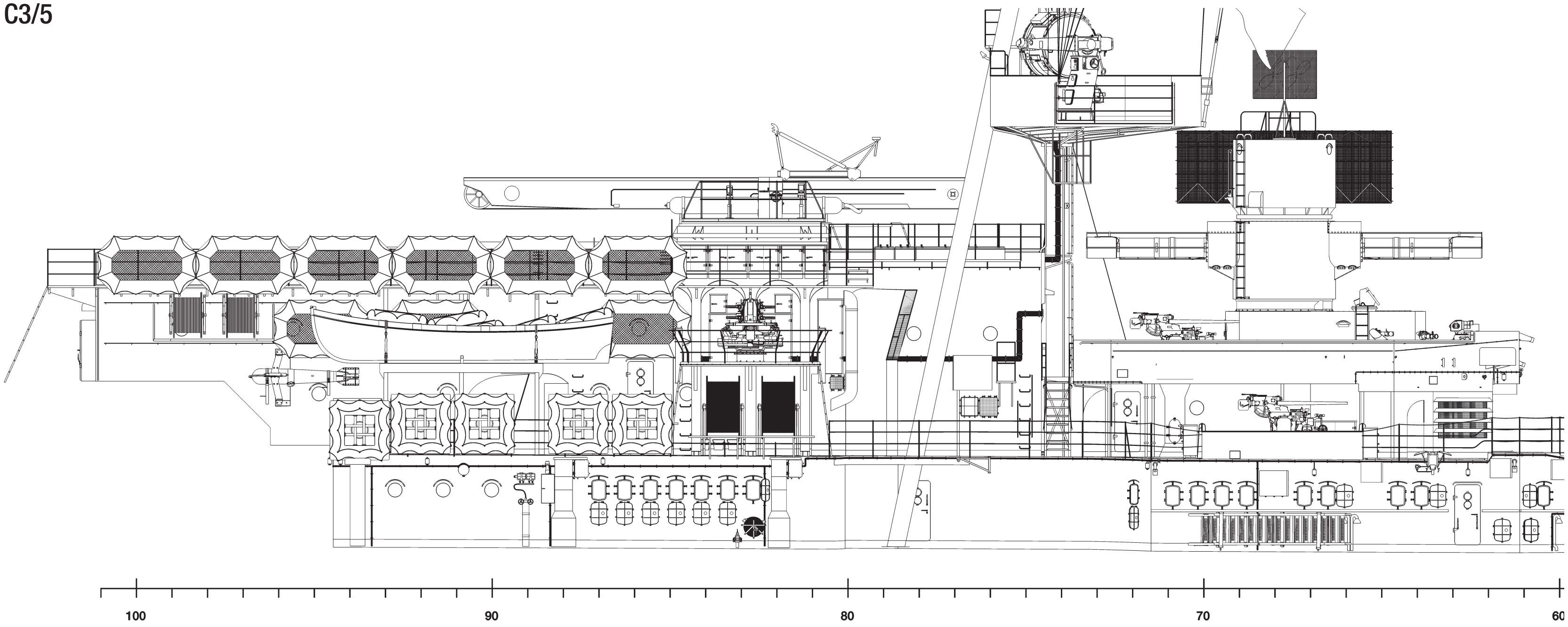

C3/6

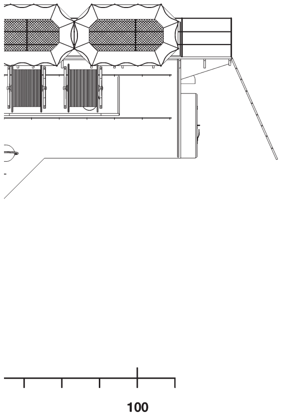

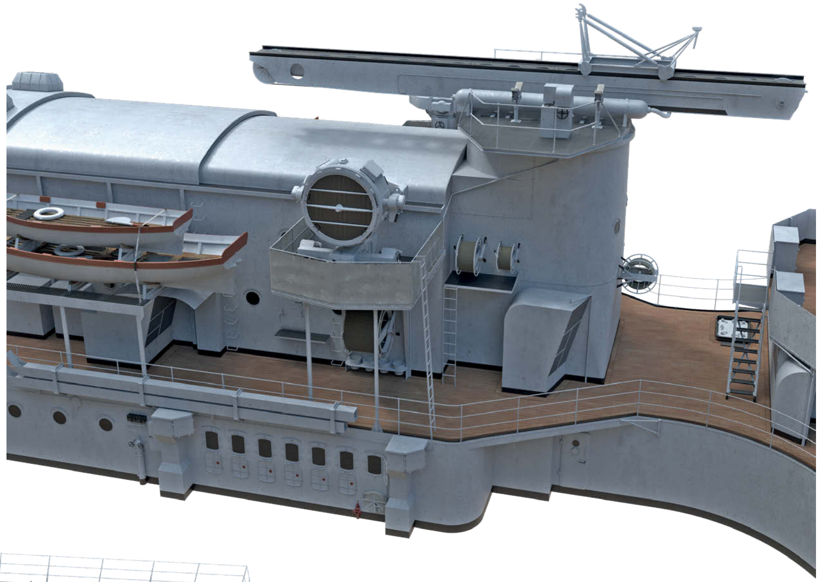

early 1939

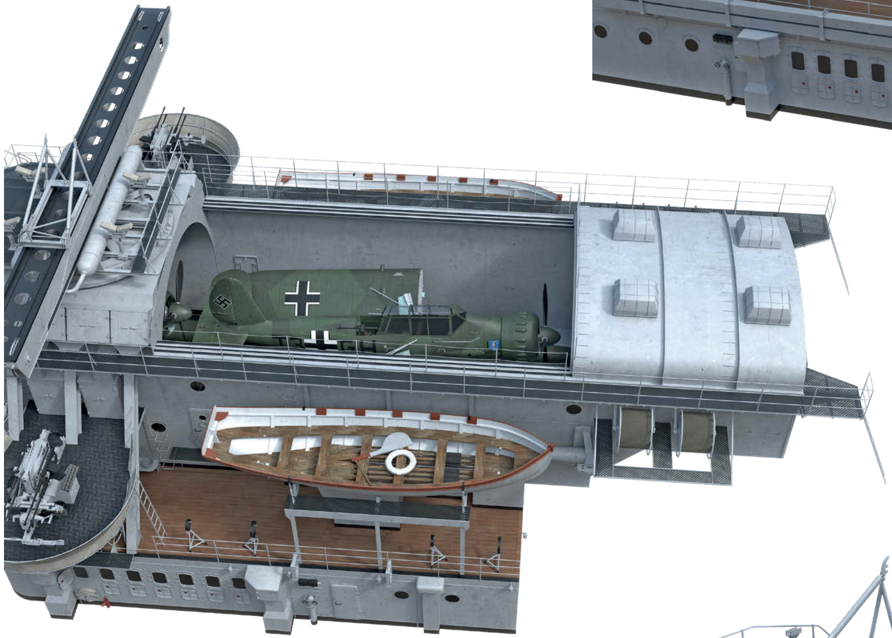

1941

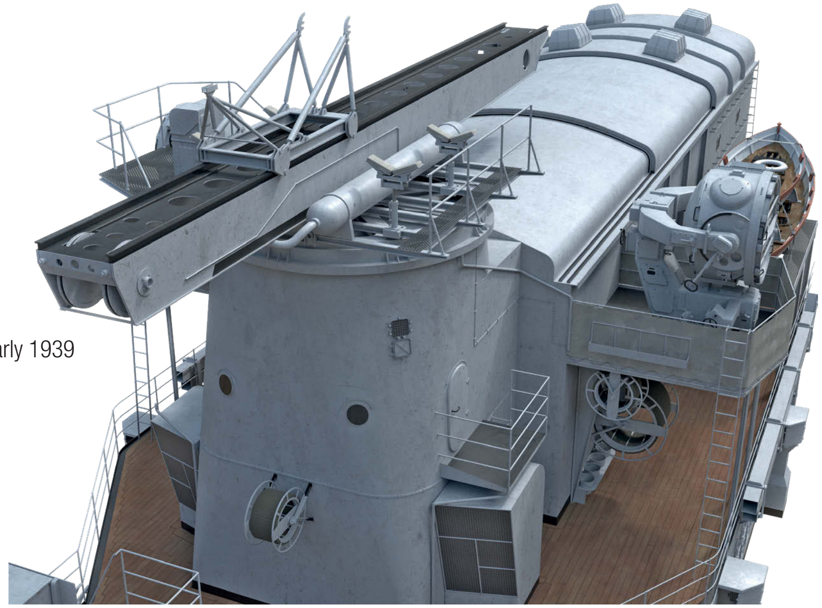

early 1939

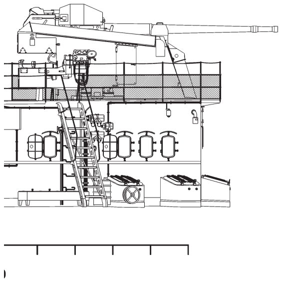

1941

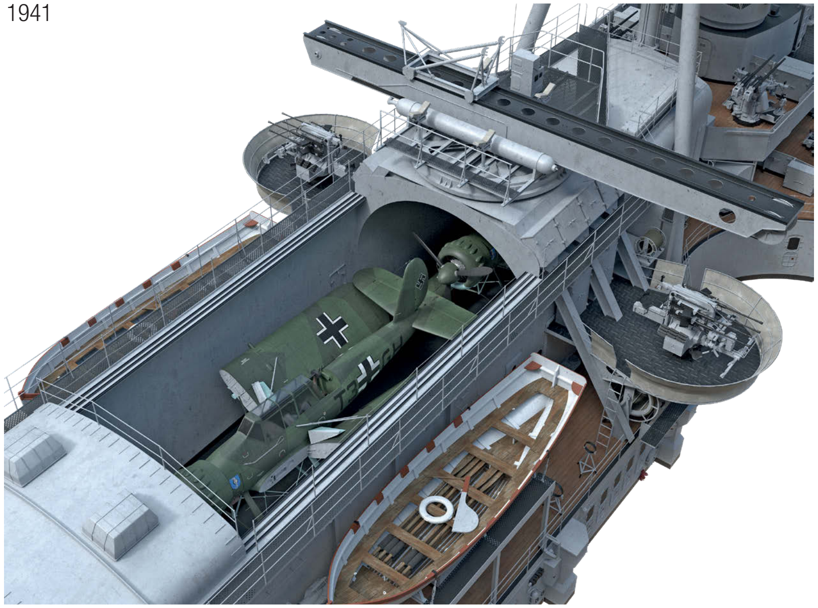

February 1942

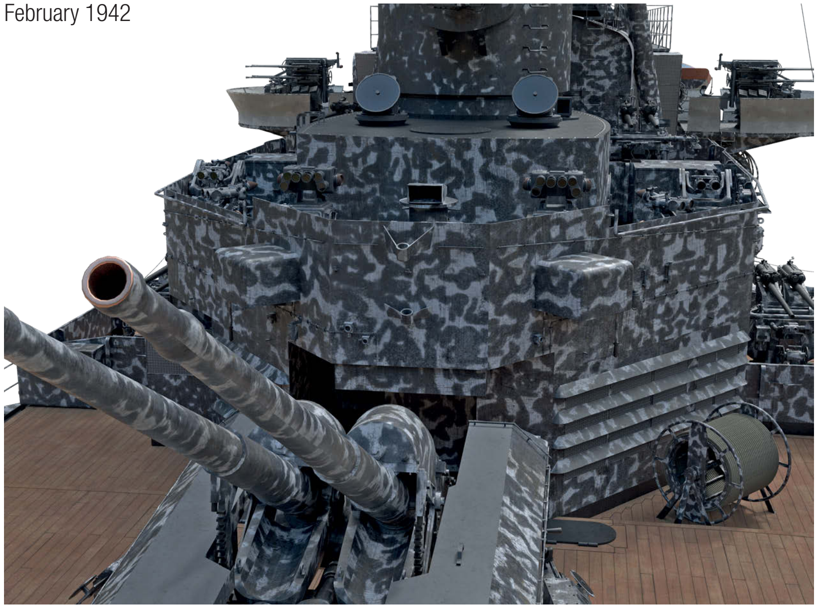

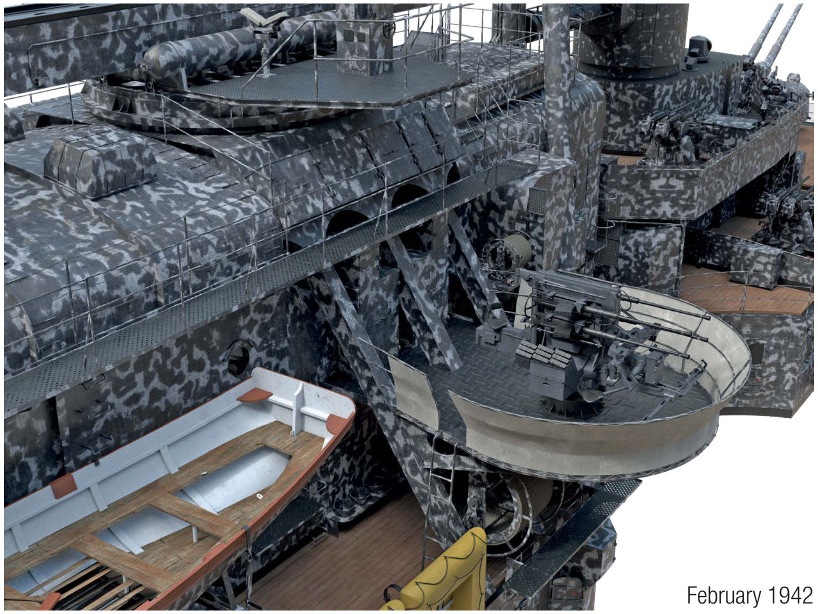

February 1942

March 1943

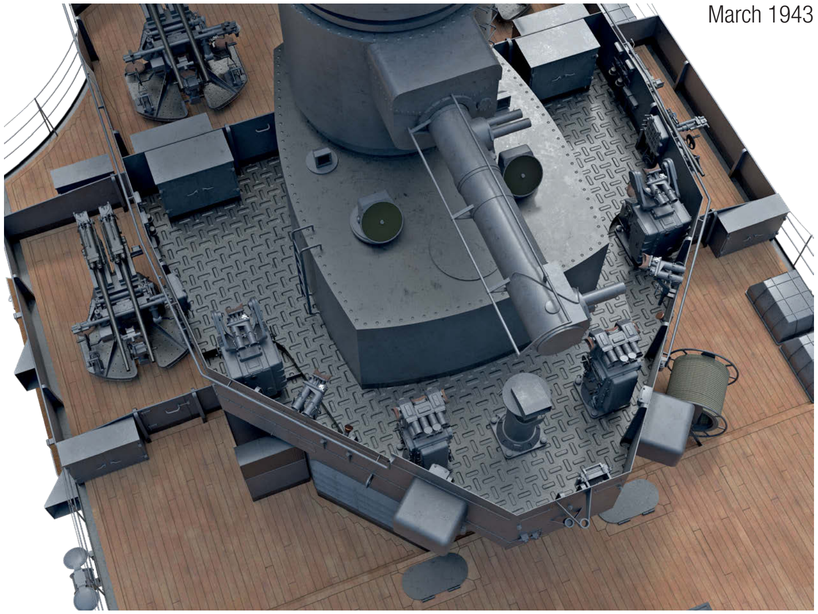

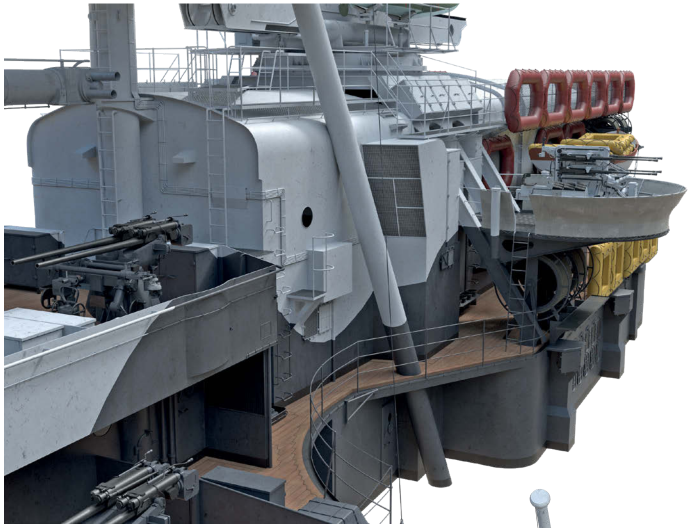

December 1943

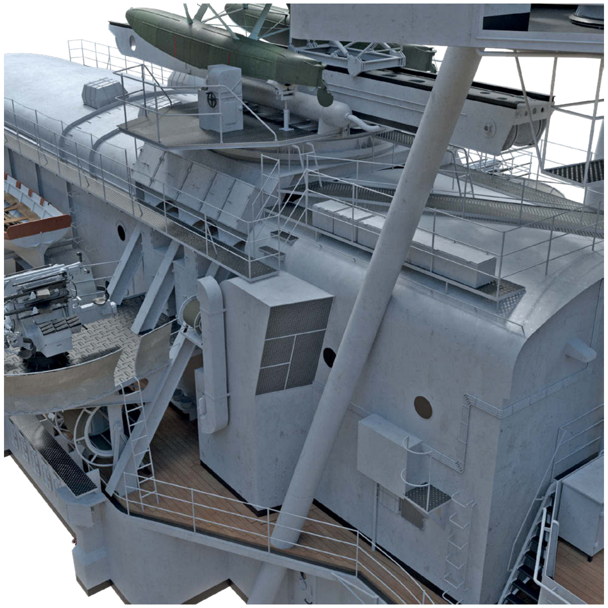

1941

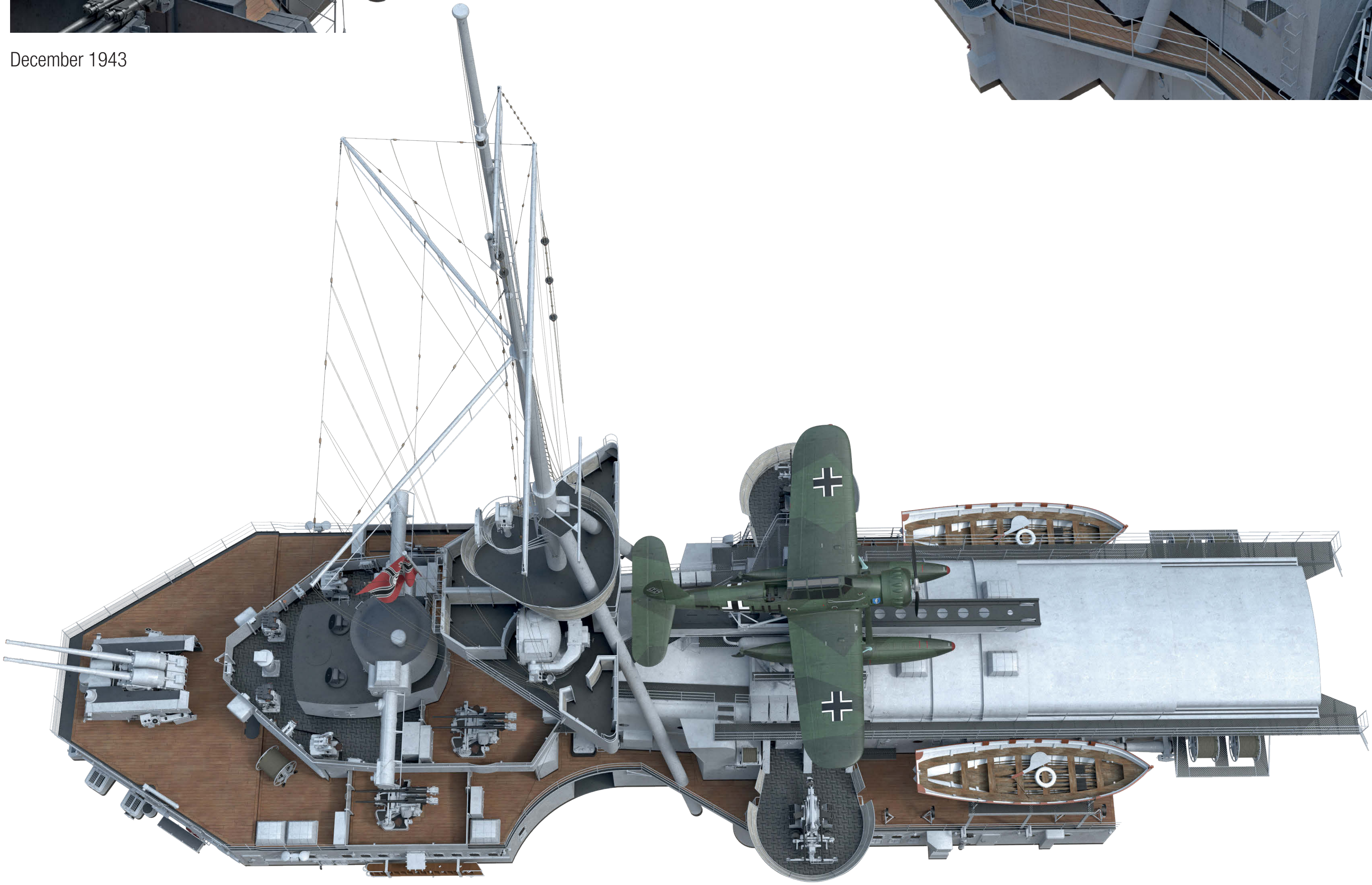

1941

AFT SUPERSTRUCTURE (1/200 SCALE)

C3/7 VIEW FROM FRAME 102 TOWARDS THE STERN, DECEMBER 1943
C3/8 VIEW FROM FRAME 74 TOWARDS THE STERN, DECEMBER 1943
C3/9 VIEW FROM FRAME 74 TOWARDS THE BOW, DECEMBER 1943
C3/10 VIEW FROM FRAME 54 TOWARDS THE BOW, DECEMBER 1943

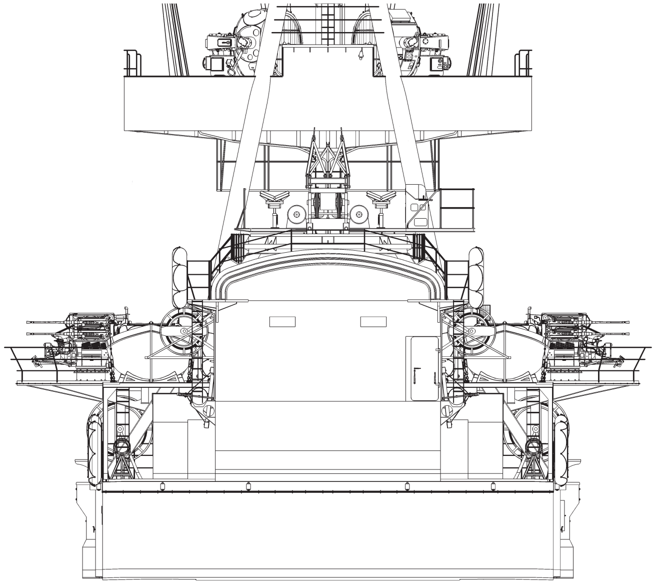

C3/7

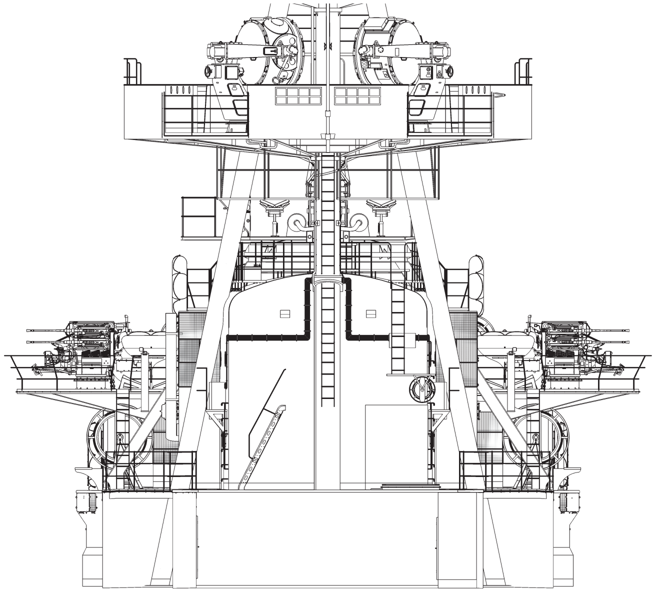

C3/9

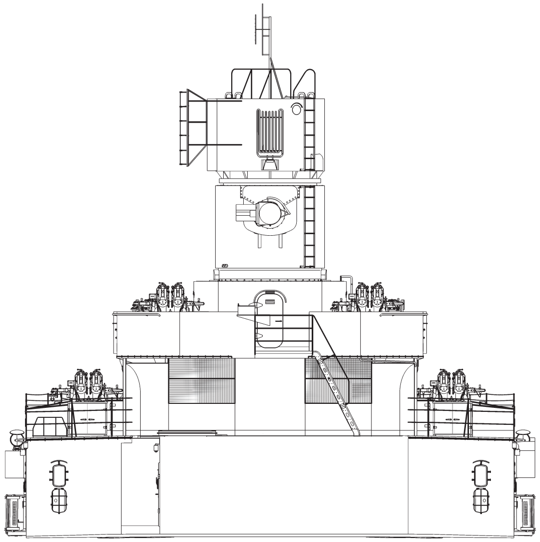

C3/8

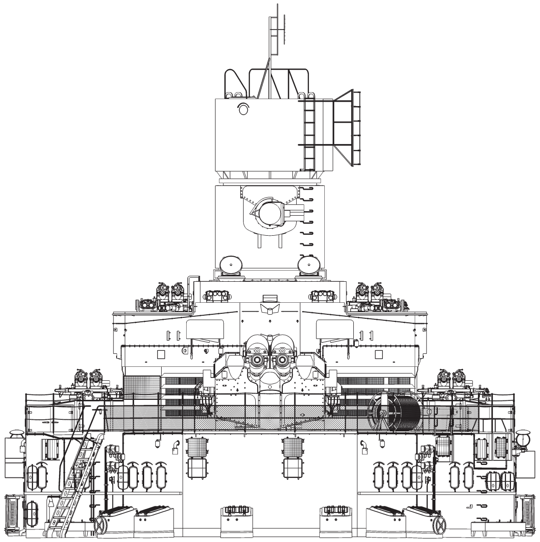

C3/10

C3/11 MAIN DECK LEVEL, 1941 – PLAN

1 Lecture room
2 Officers' mess
3 Officers' kitchen
4 Vestibule
5 Conference room
6 3.7cm mount base
7 10.5cm mount base
8 Admiral's working room
9 Admiral's sleeping room
10 Admiral's bath
11 Commander's working room
12 Commander's sleeping room
13 Commander's bath
14 Adjutant's cabin
15 Officer's cabin
16 Flag lieutenant's cabin
17 Stairs to deck above
18 Hatchway to deck below
19 Passage
20 Loudspeaker
21 Stowed accommodation ladder
22 15cm ammunition crane arm
23 Armoured communication shaft
24 Vent

C3/12 MAIN DECK LEVEL, 1943 – PLAN (FRAGMENT)

1 Vent with additional shield (from mid-1941)
2 Ladder (added in mid-1942)

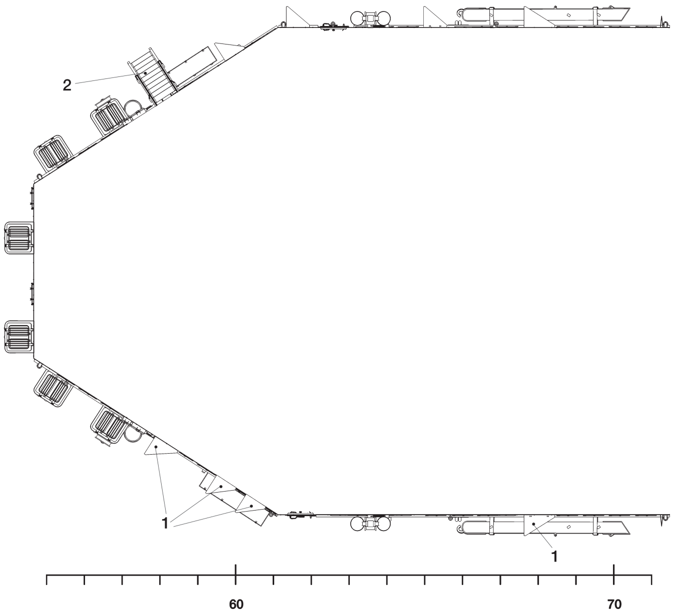

C3/12

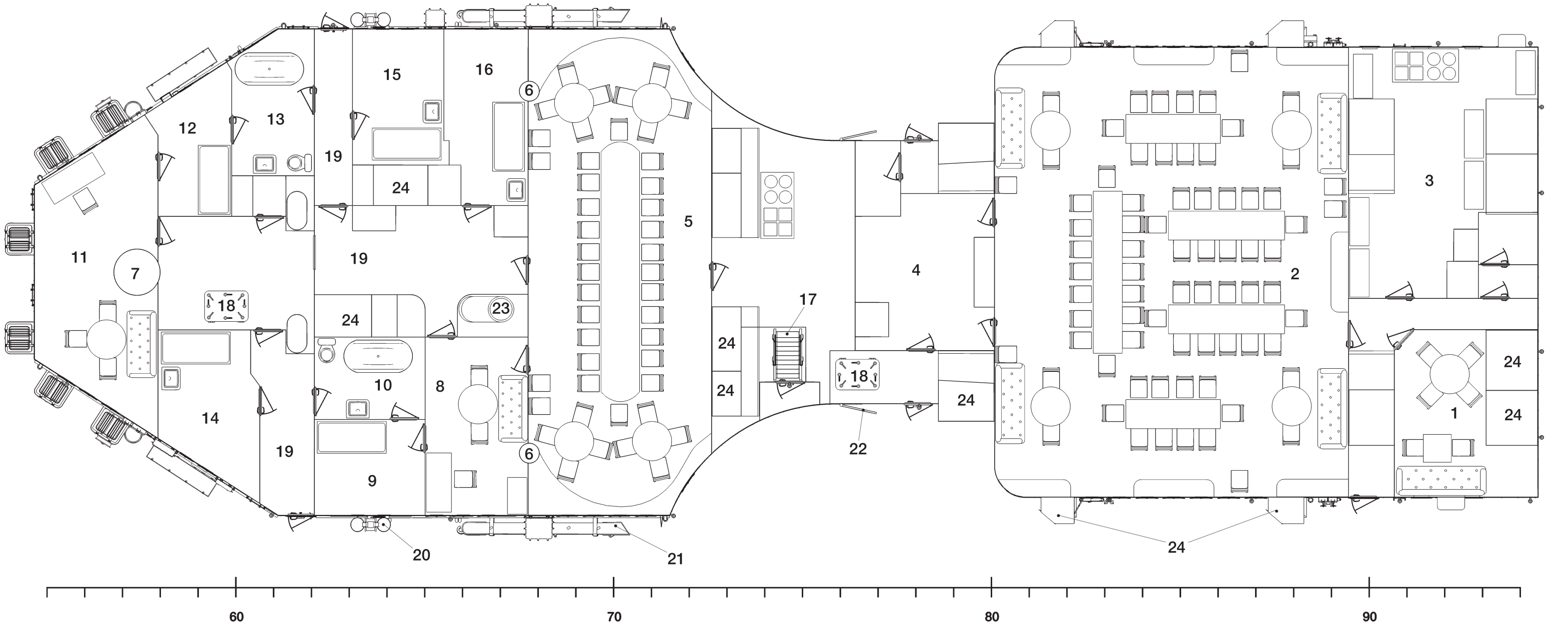

C3/11

AFT SUPERSTRUCTURE (1/200 SCALE)

C3/13 SUPERSTRUCTURE DECK LEVEL, 1941 – PLAN

1 Armoured communication shaft
2 Base of aft fire control post
3 Vent
4 Rope reel
5 Inflatable raft container
6 3.7cm mount base
7 10.5cm Dopp L C/31d twin mount (replaced the Dopp L C/31gE twin mount in mid-1939)
8 10.5cm ammunition shaft opening
9 3.7cm ammunition locker
10 Stairs to deck above (moved slightly outboards in mid-1939)
11 Hatchway to deck below
12 Crew shelter
13 Base of new tripod mainmast (from mid-1939)
14 Stowed Arado floatplane
15 Rope reel service platform (from mid-1939)
16 Bucket stowage
17 Paravane stowage cradle (from around November 1939)
18 Aircraft hangar
19 Ladder
20 Small vent (from around November 1939)
21 Twin 3.7cm mount

March 1943

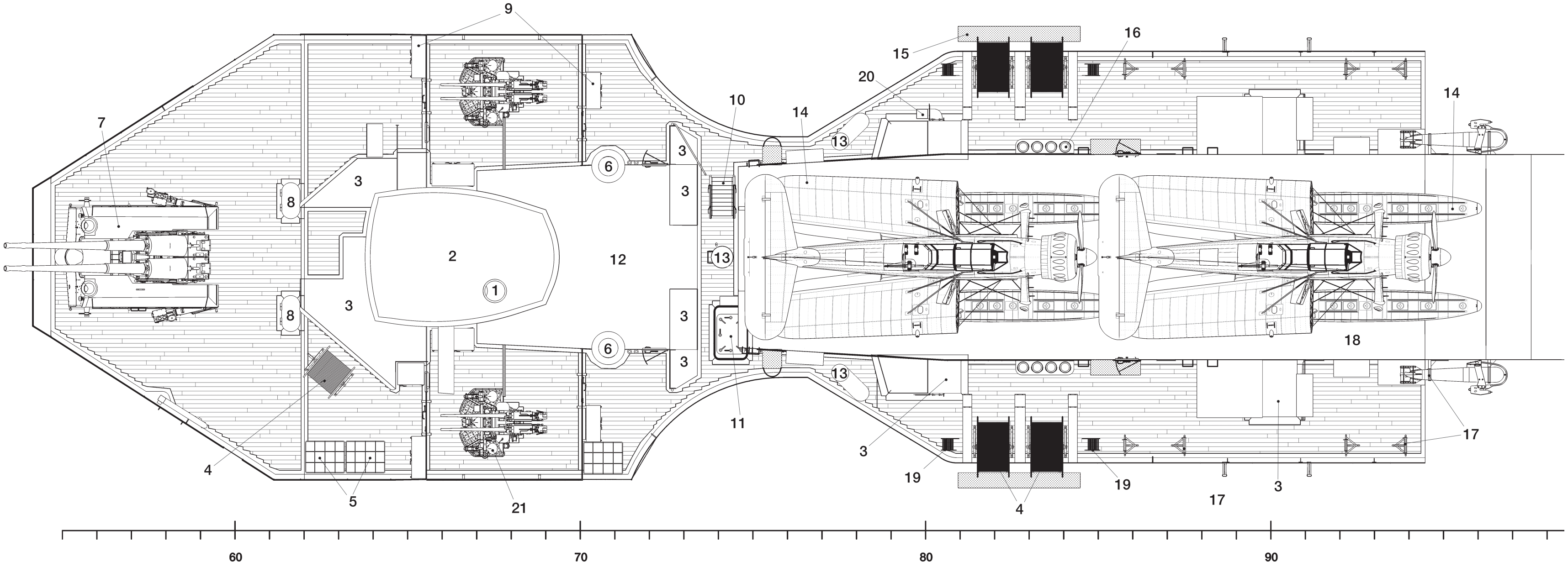

C3/13

C3/14 SUPERSTRUCTURE DECK LEVEL, 1942 – PLAN (STARBOARD SIDE FRAGMENT)

1 Stowed life raft (added in mid-1941)

C3/15 AFT NIGHT CONTROL POST LEVEL, 1941 – PLAN

1 Aft fire control post
2 Removable lookout binoculars
3 *Zielsäule* C/38S
4 Searchlight director
5 Empty flag pole cradle
6 Periscope
7 *Zielgeber* C/38S
8 10.5cm ammunition hoist drive
9 Rangefinder ring
10 Twin 3.7cm mount
11 3.7cm ammunition locker
12 Mainmast base

C3/16 AFT FIRE CONTROL POST ROOF LEVEL, 1941 – PLAN

1 *Zielgeber* C/38S
2 10.5cm rangefinder dome
3 Periscope

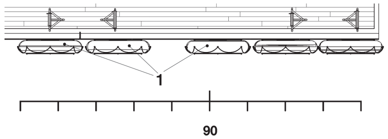

C3/14

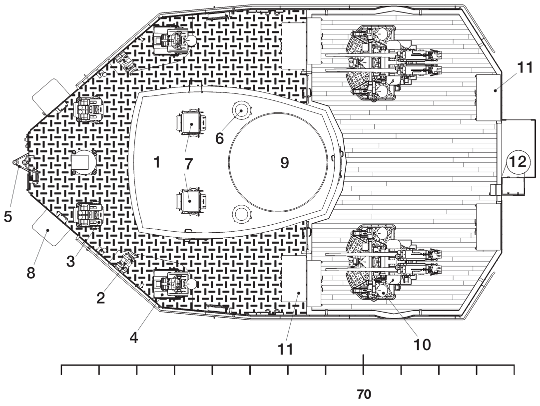

C3/15

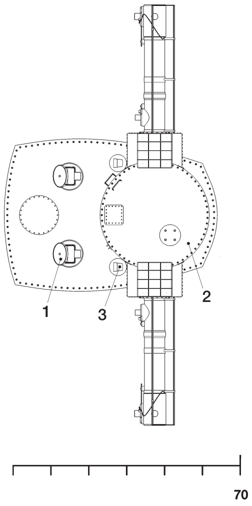

C3/16

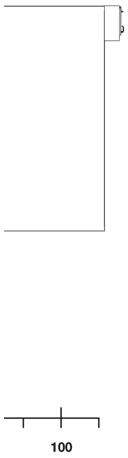

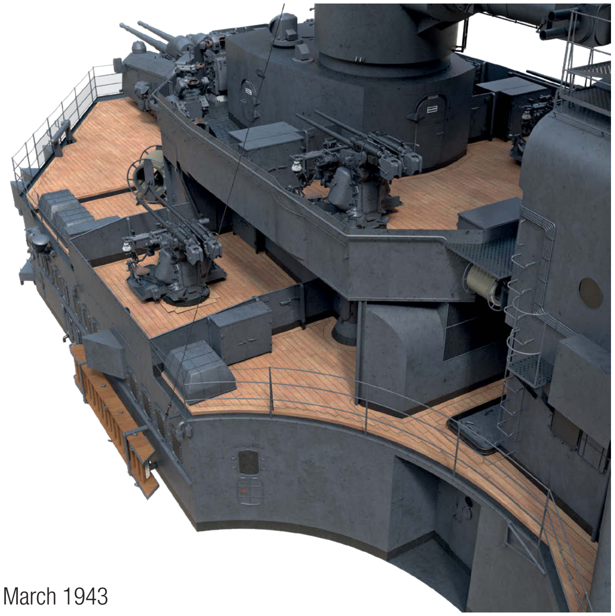

March 1943

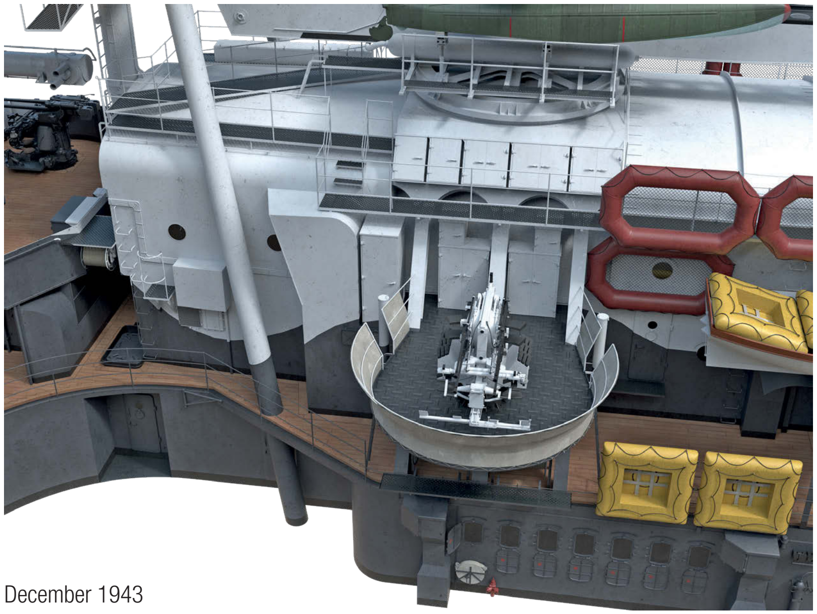

December 1943

AFT SUPERSTRUCTURE (1/200 SCALE)

C3/17 UPPER PORTION OF THE AIRCRAFT HANGAR, NOVEMBER 1939 – PLAN

1 Row yawl stowed inside row cutter (probably not present after December 1940)
2 Row cutter
3 Rope reel (removed in January 1941)
4 Catwalk around the hangar (added November 1939)

C3/18 UPPER PORTION OF THE AIRCRAFT HANGAR, 1941 – PLAN

1 2cm *Vierling* platform (added in January 1941)
2 Rope reel (removed in mid-1942)
3 Inflatable raft container (removed in mid-1942)
4 Rope reel and service platform (added in January 1941)
5 Locker (added in January 1941)
6 Aircraft catapult base
7 Hangar outer sliding door
8 Hangar middle sliding door
9 Hangar inner sliding door
10 Vent (heightened in November 1939)

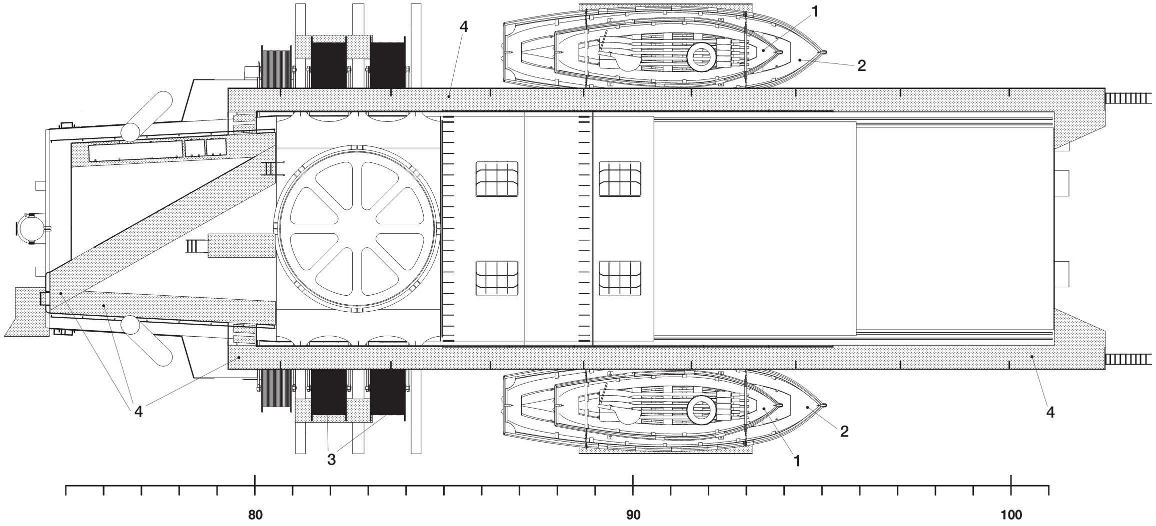

C3/17

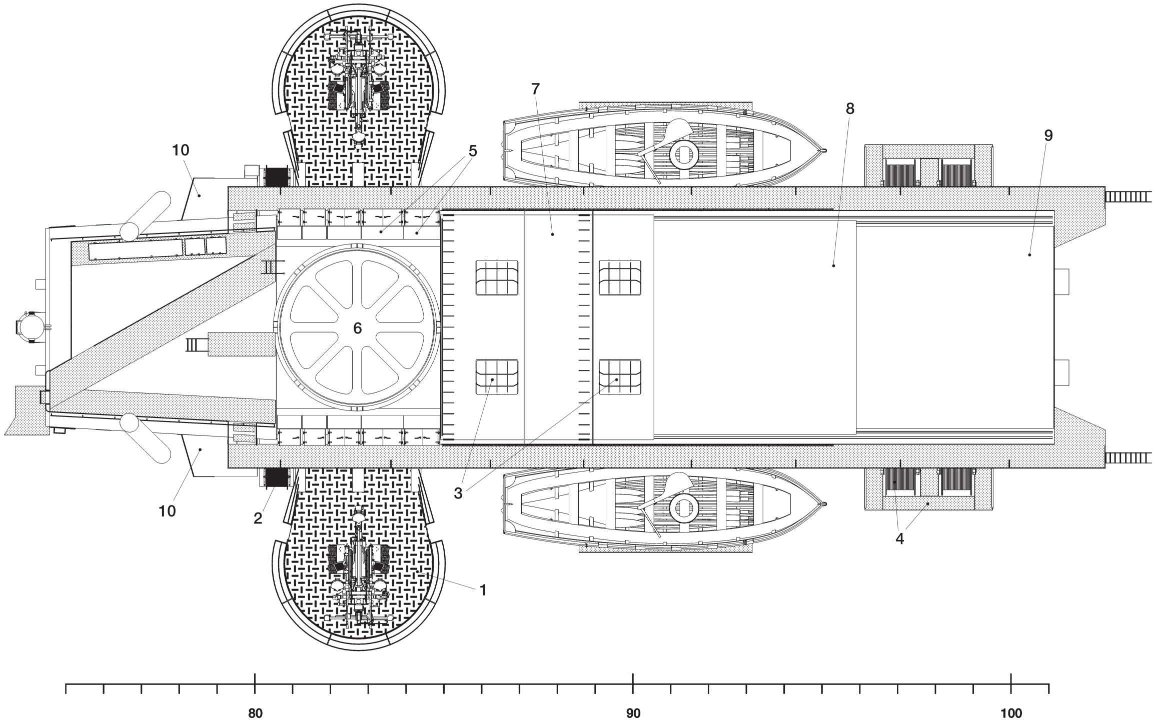

C3/18

C3/19 UPPER PORTION OF THE AIRCRAFT HANGAR, 1943 – PLAN

1 2cm gun tube (added in mid-1942)
2 Life raft (from mid-1942)

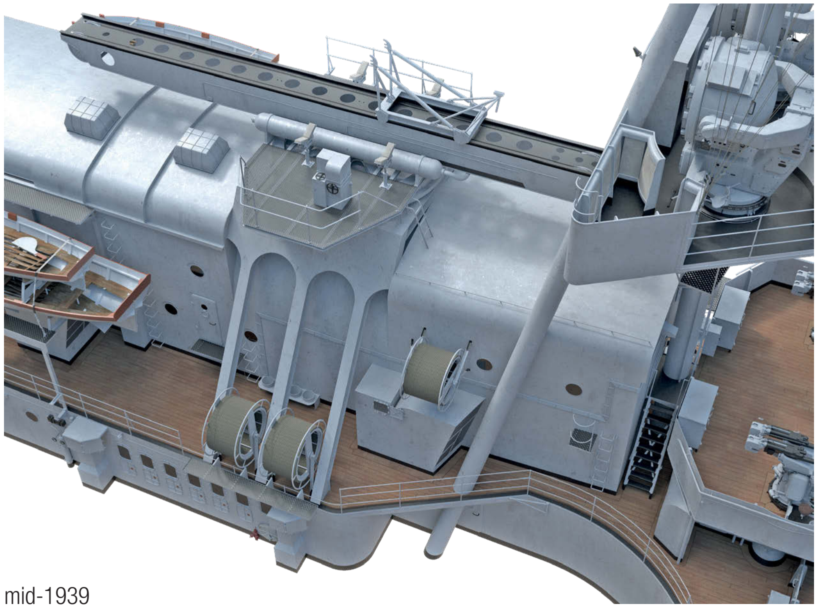

mid-1939

February 1942

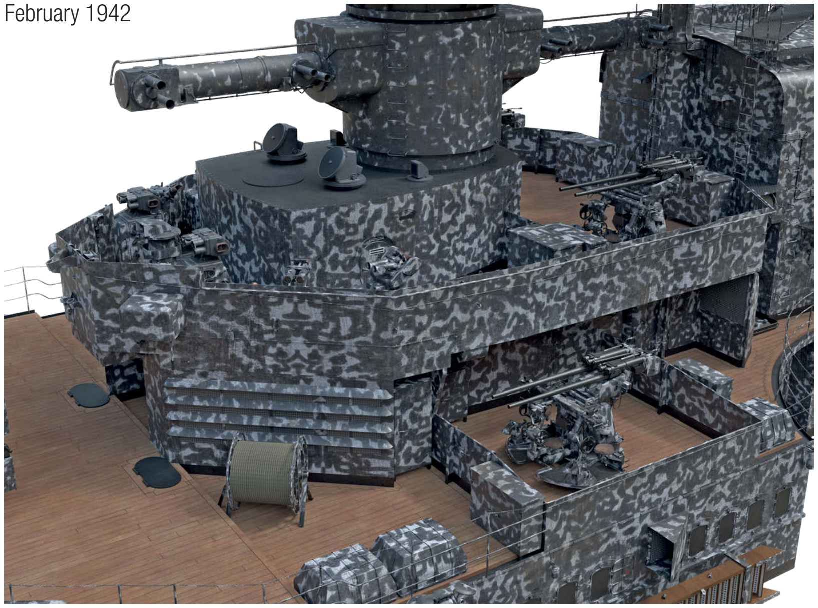

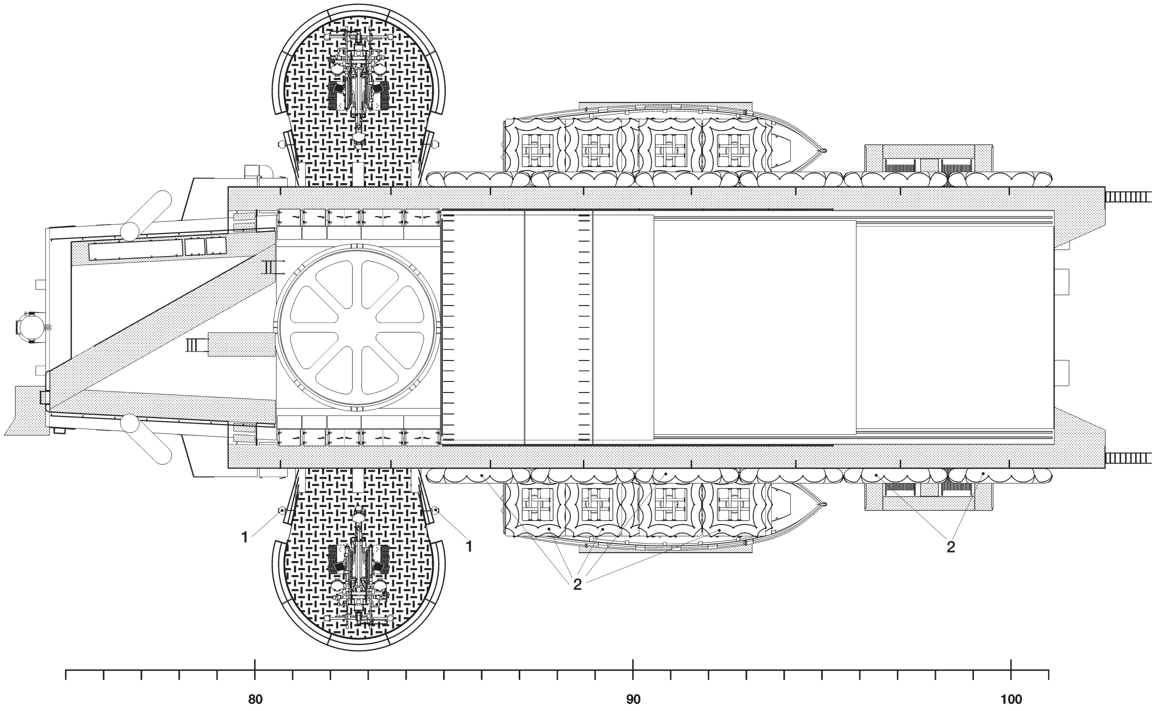

C3/19

SHIP'S RIG

D1/1 PERSPECTIVE VIEW, EARLY 1939 (NO SCALE)

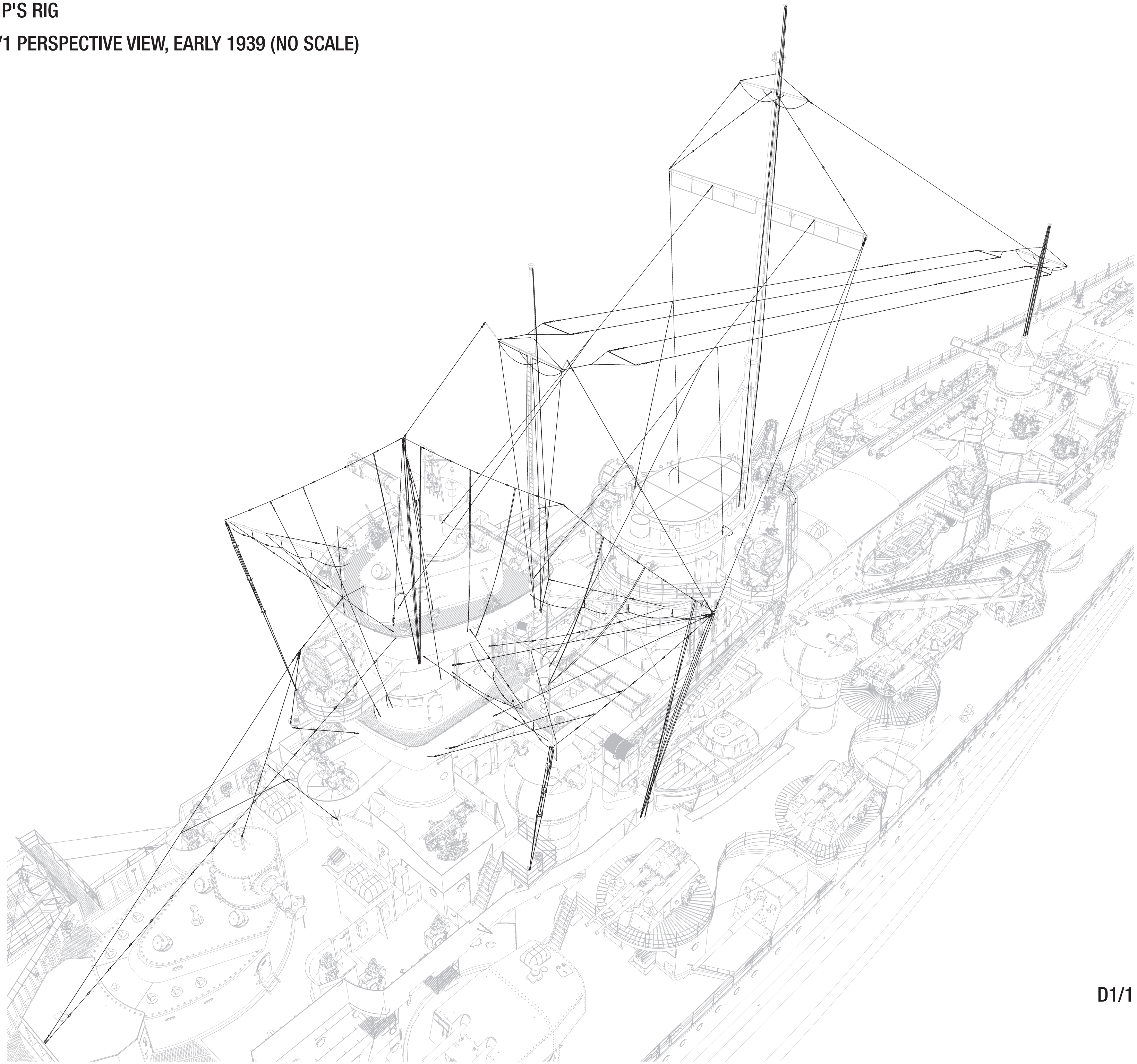

D1/1

D1/2 PERSPECTIVE VIEW, MID-1939–EARLY 1942 (NO SCALE)

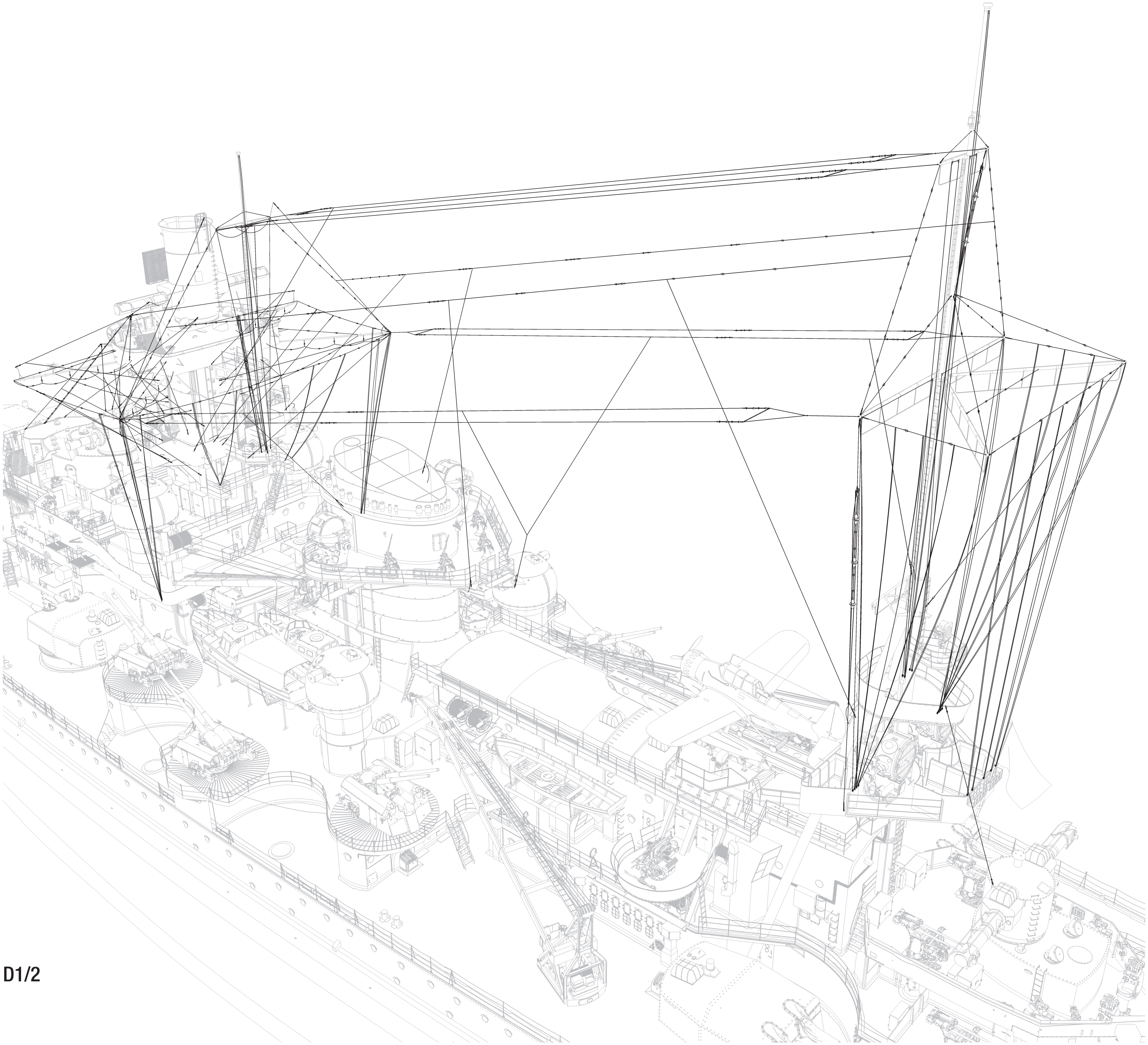

D1/2

SHIP'S RIG

D1/3 PERSPECTIVE VIEW, 1942–1943 (NO SCALE)

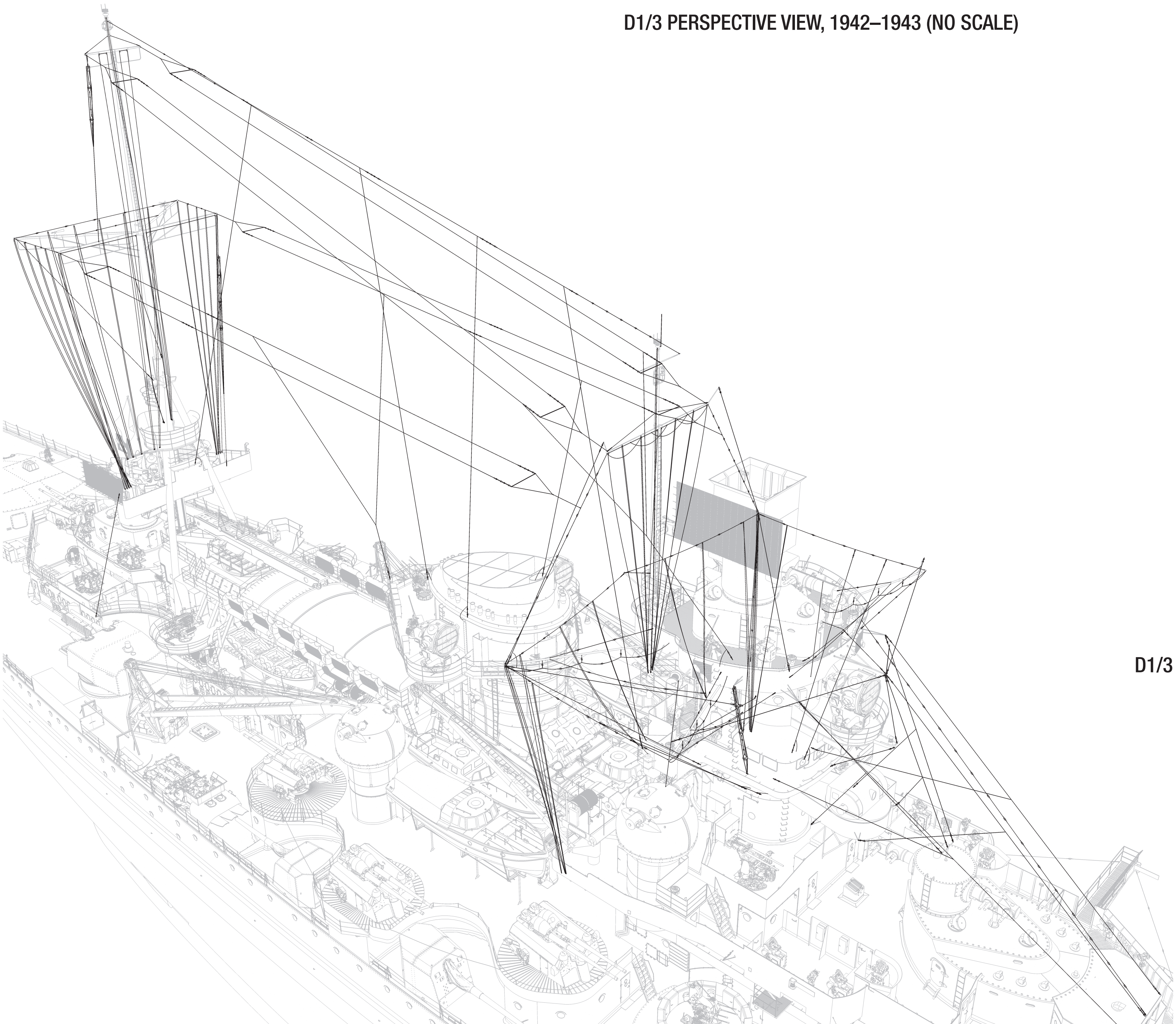

D1/3

D1/4 PERSPECTIVE VIEW, 1942–1943 (NO SCALE)

D1/4

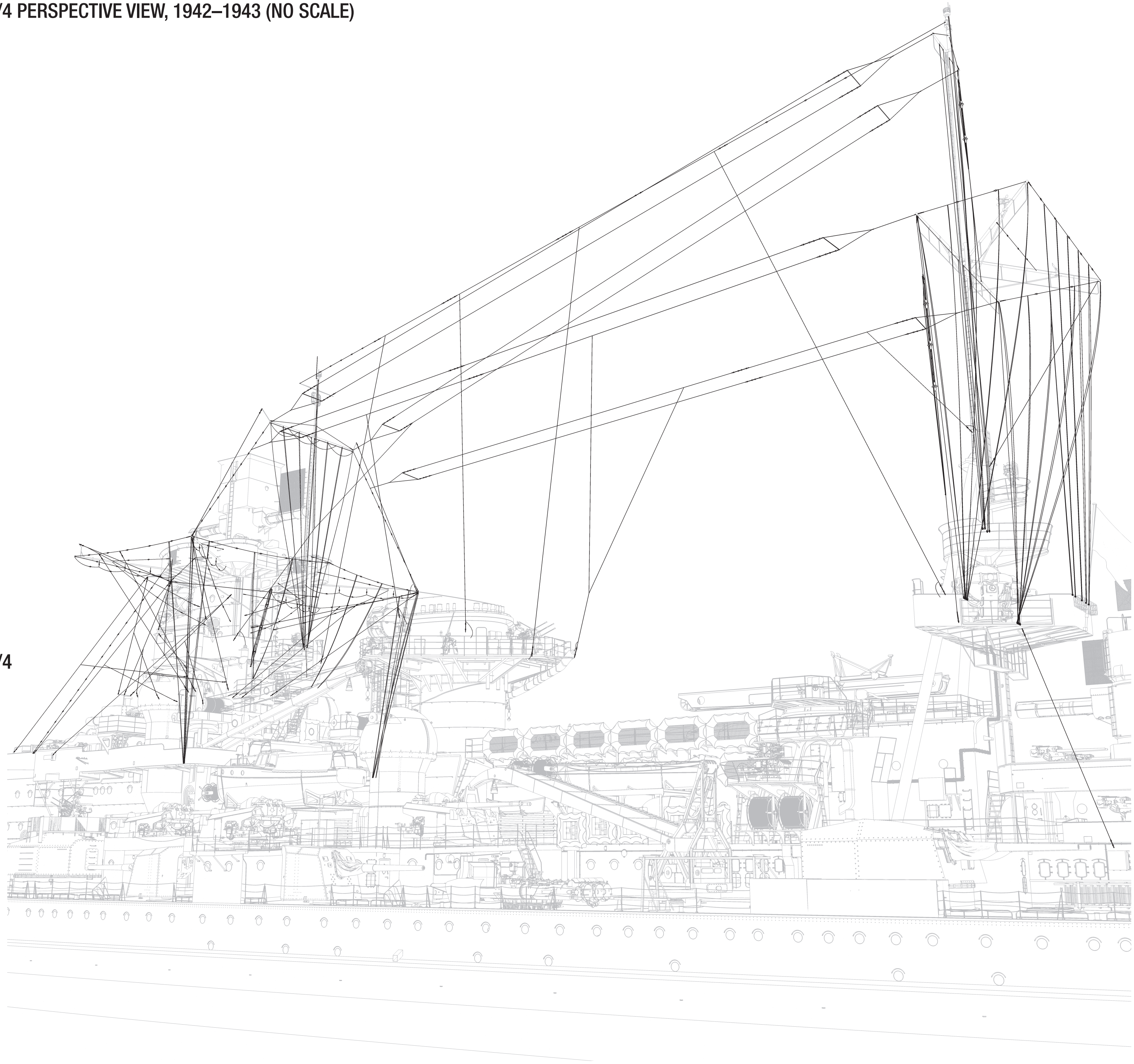

SHIP'S RIG (1/400 SCALE)

D1/5 RIGHT PROFILE, 1942–1943

D1/6 FRONT VIEW, FOREMAST AREA, 1942–1943

D1/7 BACK VIEW, MAINMAST AREA, 1942–1943

D1/8 PLAN, 1942–1943

D1/5–8 SHIP'S RIG

1 Stay of wire antenna spar
2 *Nachtsignalapparat* (night signalling apparatus) – vertical array of 3 white and red lamps
3 Warning lights
4 Foremast flag halyard
5 Mainmast flag halyard
6 Stay of mainmast spar
7 Wire antenna shroud
8 Longwave transmitting antenna (Radio room A)
9 Shortwave transmitting antenna (Radio room A)
10 Long-distance shortwave transmitting antenna (Radio room A)
11 Longwave transmitting antenna (Radio room B)
12 Shortwave transmitting antenna (Radio room B)
13 Longwave transmitting antenna (Radio room C)
14 Shortwave transmitting antenna (Radio room C)
15 Long-distance shortwave transmitting antenna (Radio room C)
16 Shortwave receiving antenna (Radio room A)
17 Shortwave receiving antenna (Radio room B)
18 Shortwave receiving antenna (Radio room C)
19 Radio direction finder antenna
20 Broadcast antenna (Radio room A)
21 VHF transmitting antenna
22 Reserve transmitting antenna
23 Broadcast antenna (admiral's cabin)
24 Navigation antenna

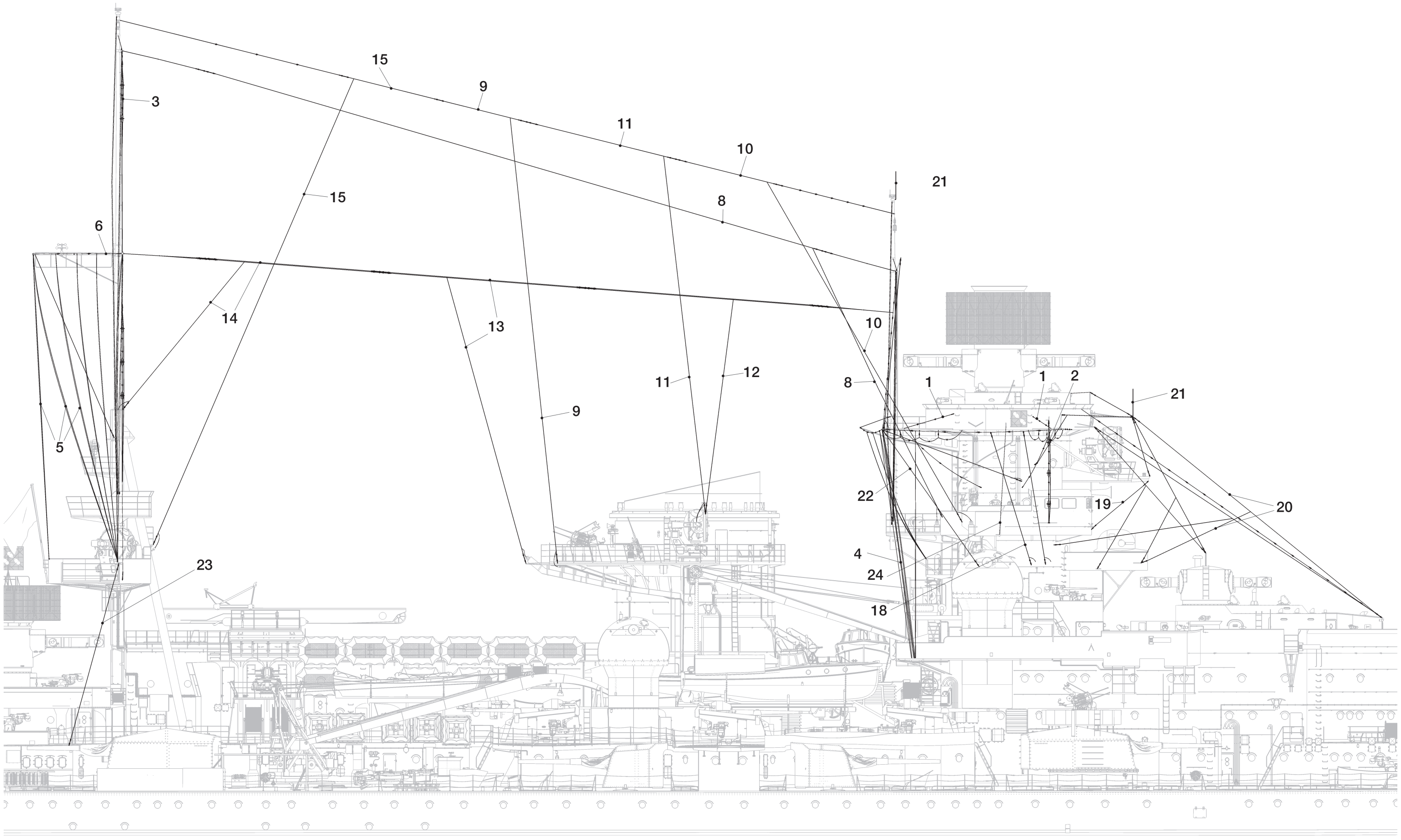

D1/5

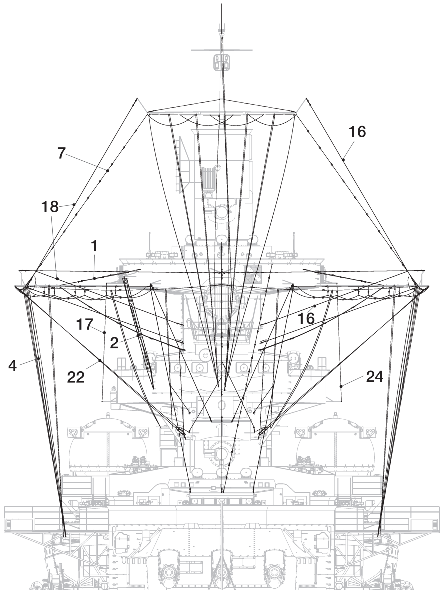
7
16
18
1
17
16
2
4
22
24

D1/6

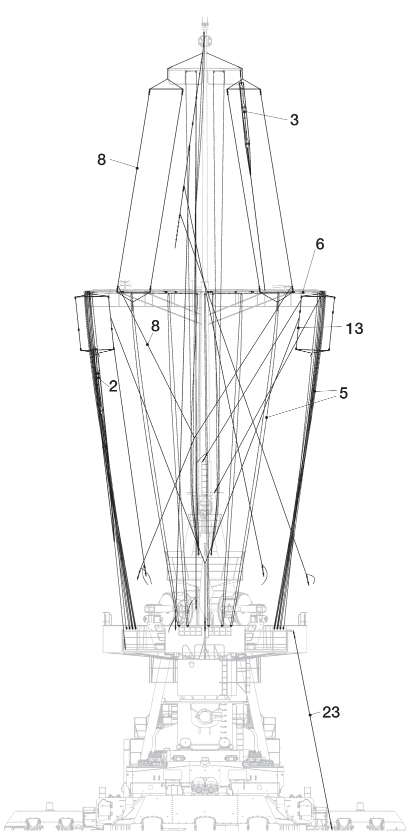
3
8
6
8
13
2
5
23

D1/7

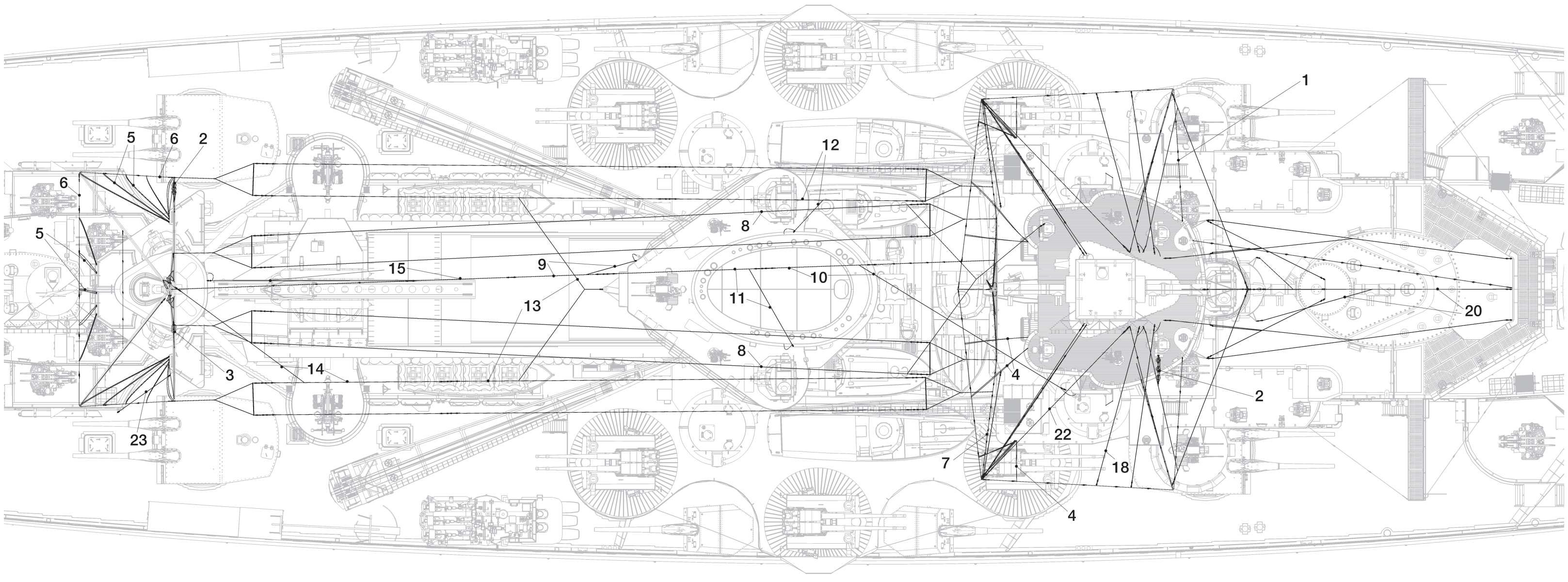
1
5
6
2
12
6
8
5
15
9
10
11
13
20
8
3
14
4
2
23
22
7
18
4

D1/8

FOREMAST (1/200 SCALE)

D2/1 RIGHT PROFILE, UNTIL MID-1942
D2/2 FRONT VIEW, UNTIL MID-1942
D2/3 PLAN, UNTIL MID-1942

D2/4 RIGHT PROFILE, FROM MID-1942
D2/5 FRONT VIEW, FROM MID-1942
D2/6 PLAN, FROM MID-1942

D2/4–6 FOREMAST
1 Red mooring maneuver light
2 White top light
3 FuMB Ant 3 *Bali* passive detector antenna (from autumn 1943)

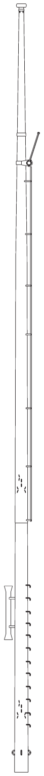

D2/1

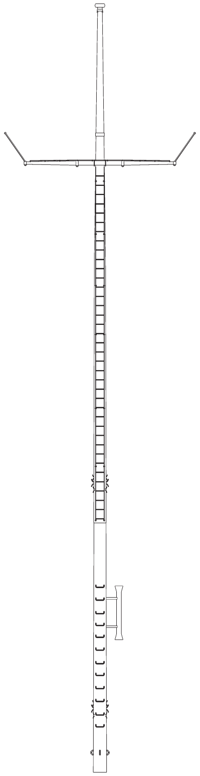

D2/2

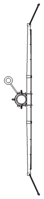

D2/3

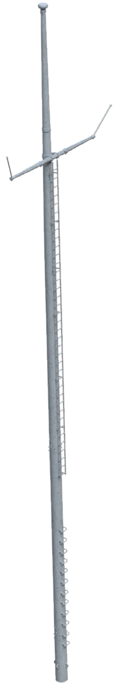

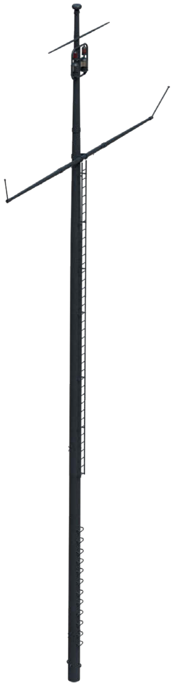

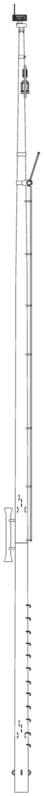

D2/4

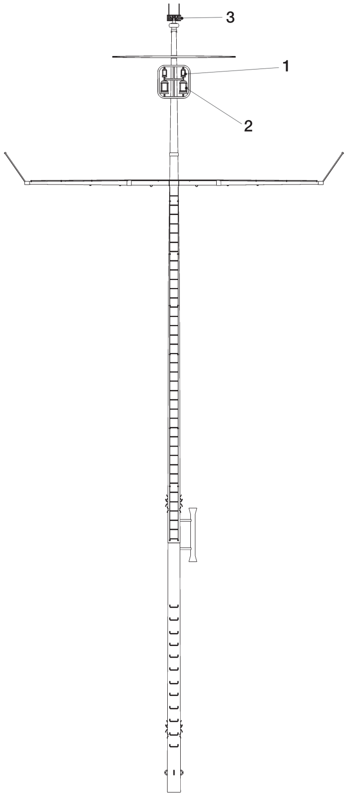

D2/5

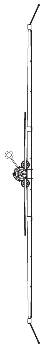

D2/6

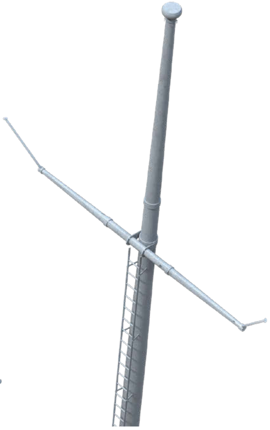

MAINMAST (1/200 SCALE)

D2/7 RIGHT PROFILE, MID-1939–MID-1940
D2/8 FRONT VIEW, MID-1939–MID-1940

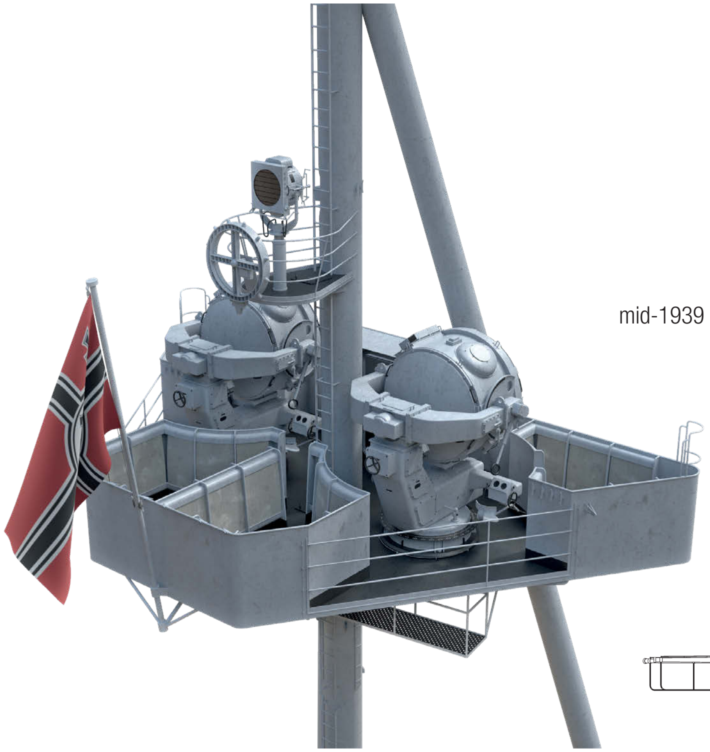

mid-1939

D2/7

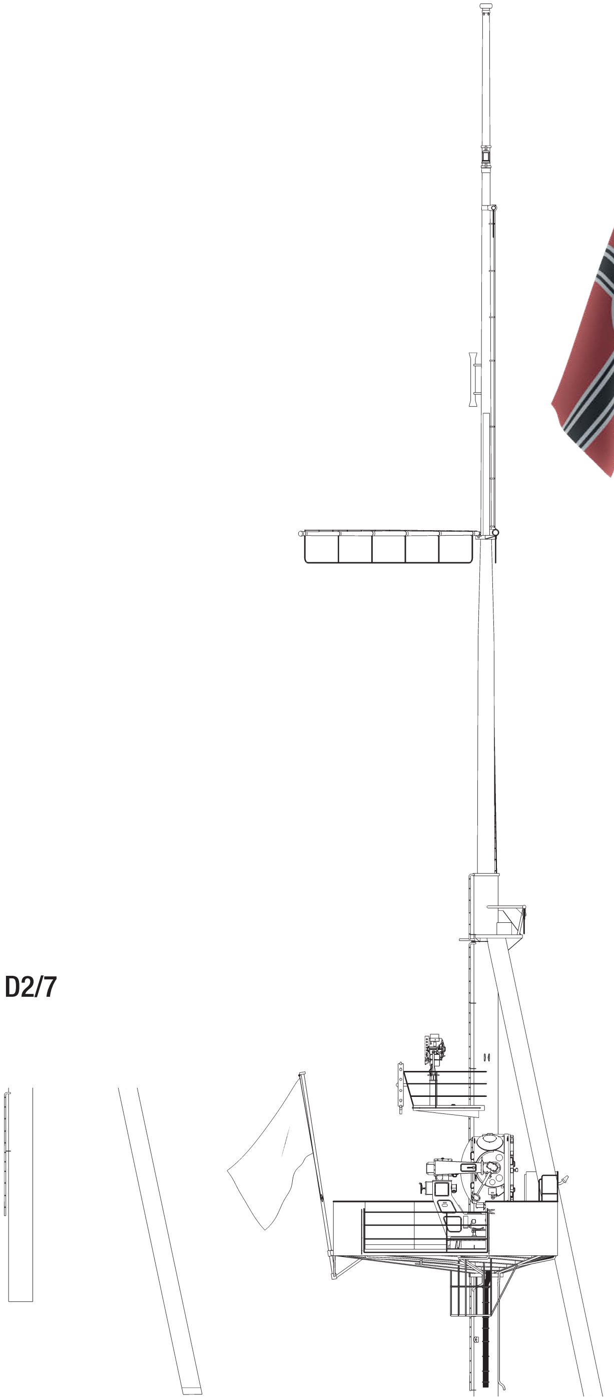

D2/8

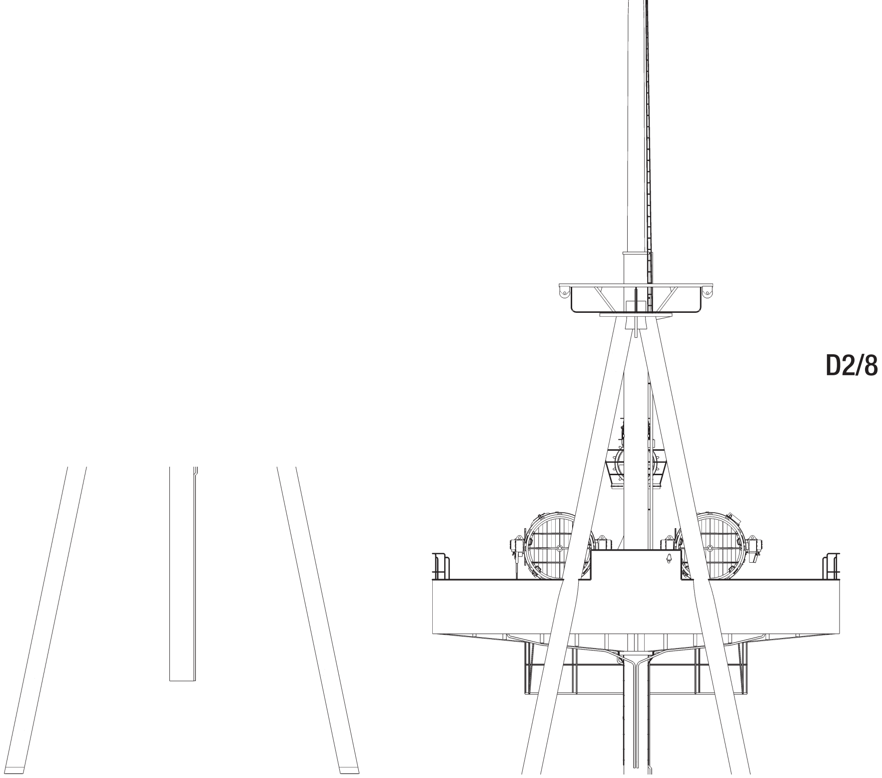

MAINMAST (1/200 SCALE)

D2/9 RIGHT PROFILE, MID-1940–MID-1942 (FRAGMENT)
D2/10 LEFT PROFILE, MID-1940–MID-1942 (FRAGMENT)
D2/11 FRONT VIEW, MID-1940–MID-1942 (FRAGMENT)
D2/12 BACK VIEW, MID-1940–MID-1942 (FRAGMENT)

D2/9–16 MAINMAST

1 Wind direction transmitter (starboard side), wind strength transmitter (port side), both fitted in mid-1941
2 Speed indicator for friendly ships (removed in mid-1942)
3 Rudder indicator yardarm (removed in mid-1942)
4 Mast spar support (added in mid-1942)
5 White top light (moved upwards in mid-1942)
6 Signal platform (moved upwards in mid-1940)
7 FuMB Ant 3 *Bali* passive detector antenna (from autumn 1943)
8 Steel plate shield (welded to the railing from mid-1941)
9 Battle ensign rod (moved slightly upwards in late 1941)
10 Signal bridge
11 Signalman's platform
12 Signal flags under canvas covers
13 Crew shelter (with a platform on its roof from mid-1940)
14 Searchlight
15 Searchlight service platform
16 Upper part of mainmast (lowered telescopically for transit under bridges)
17 Jacob's ladder
18 Signal lamp

1941

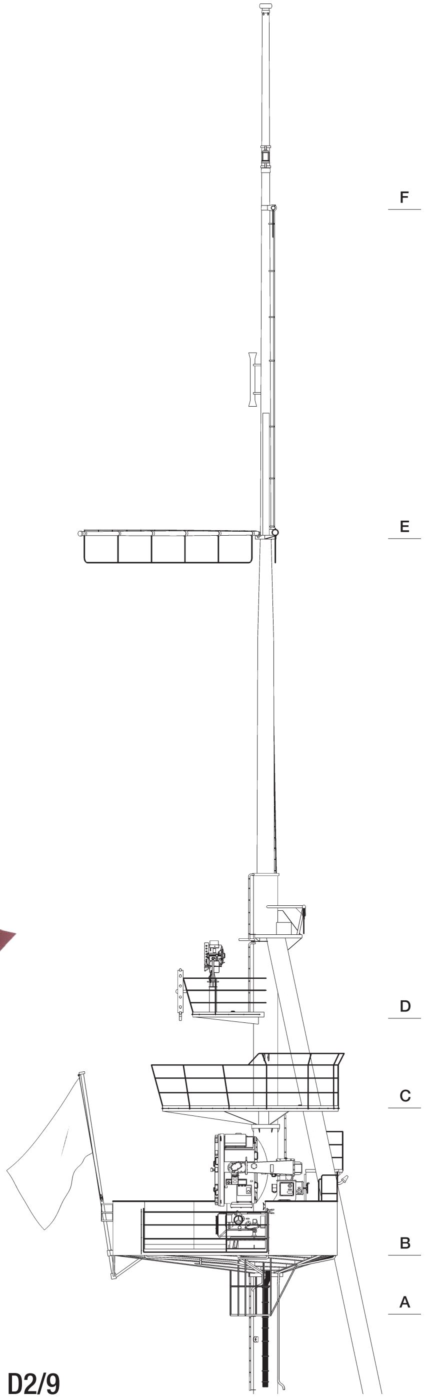

D2/9

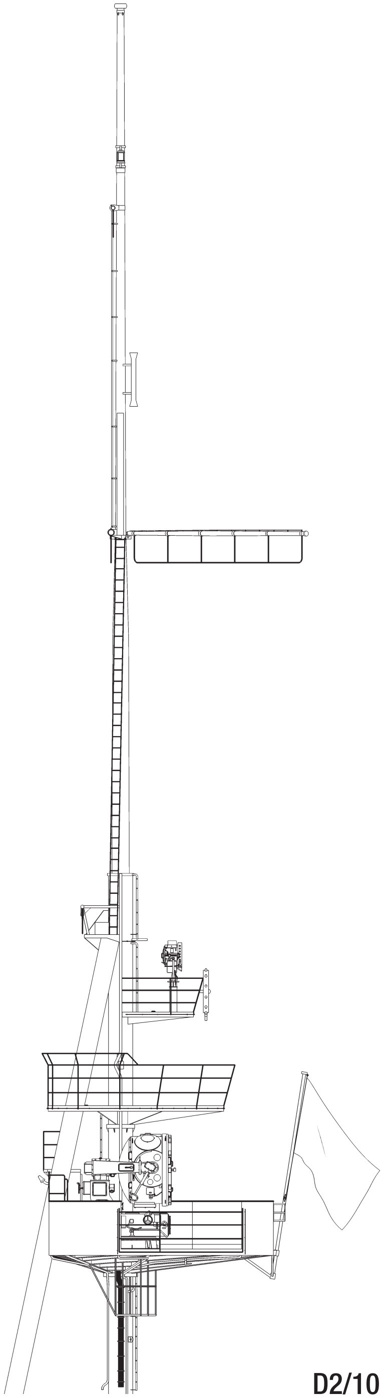

D2/10

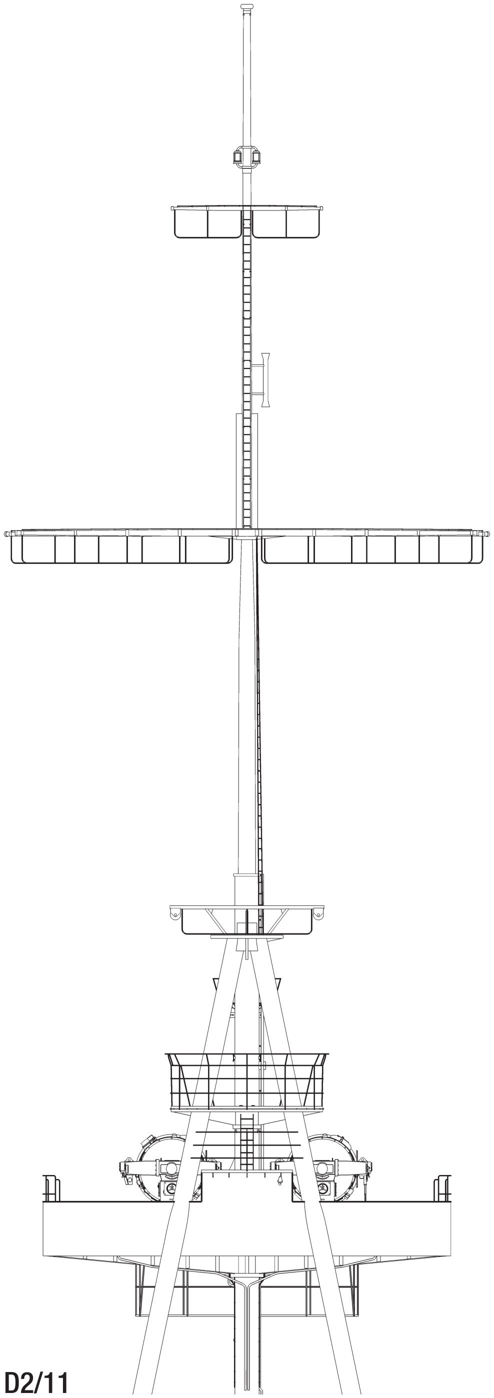

D2/11

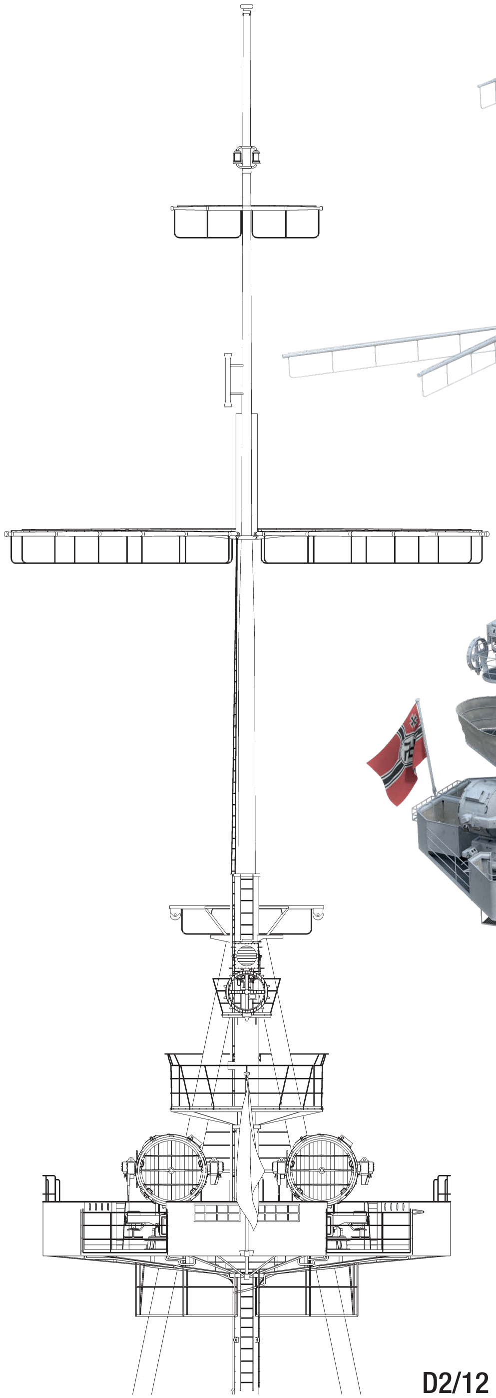

D2/12

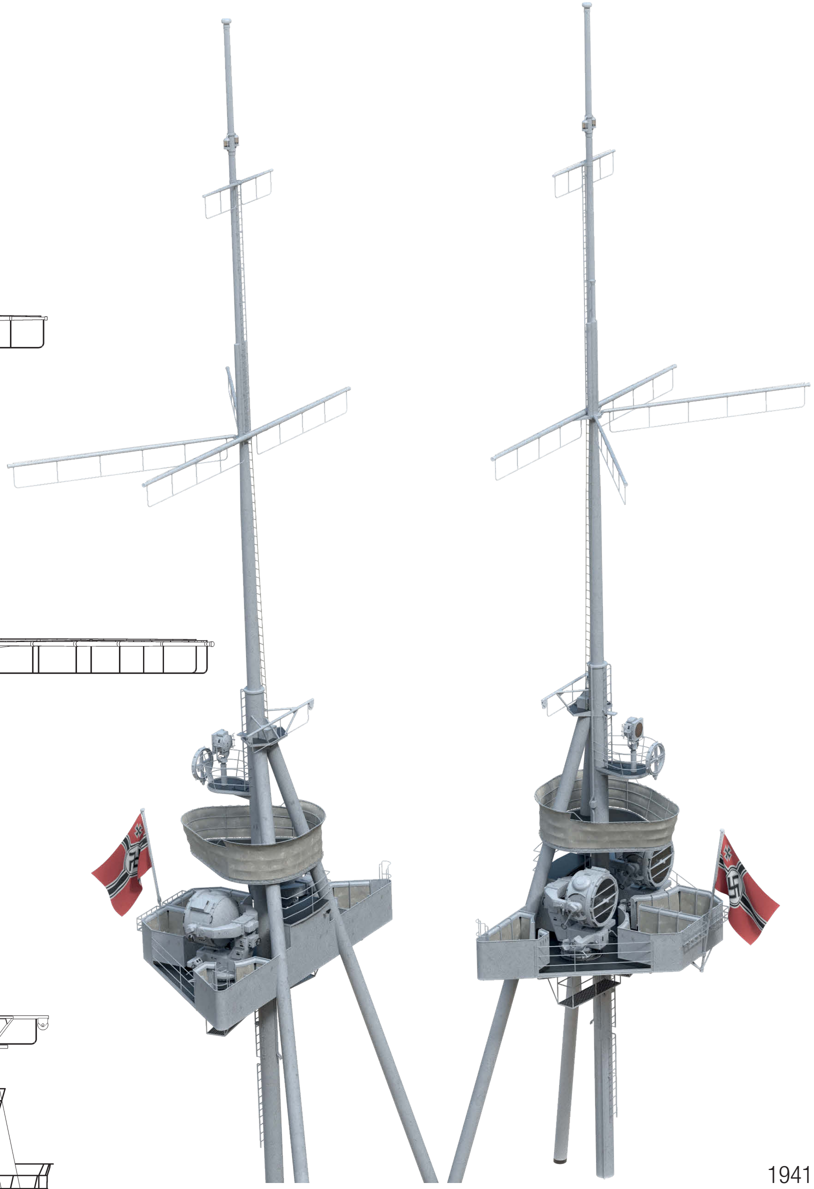

1941

MAINMAST (1/200 SCALE)

D2/13 LEVELS OF THE MAINMAST – PLAN

D2/14 LEVELS OF THE MAINMAST – BOTTOM VIEW

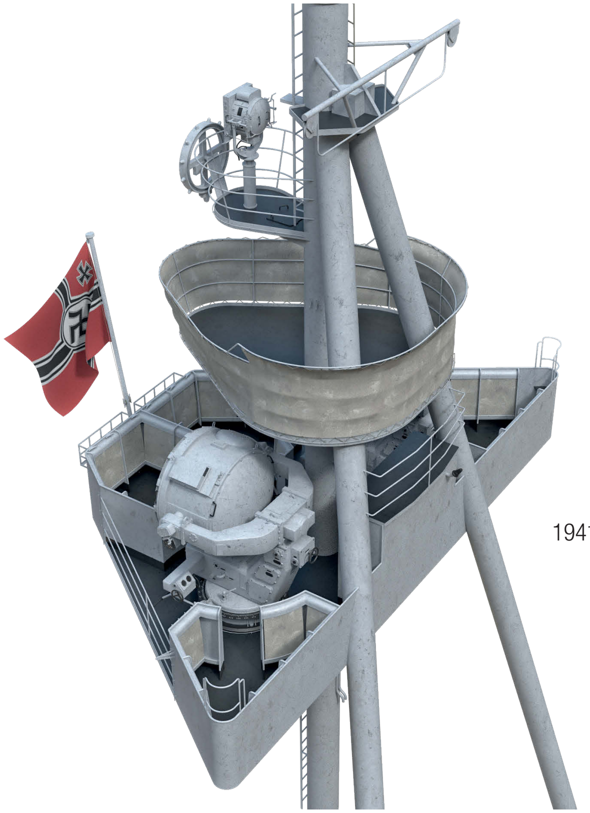

1941

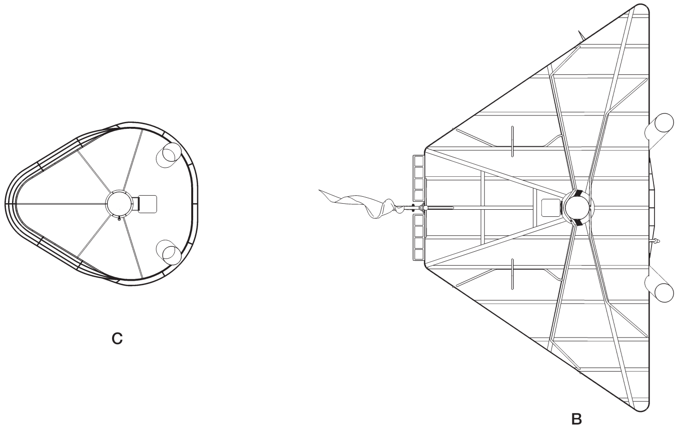

D2/14

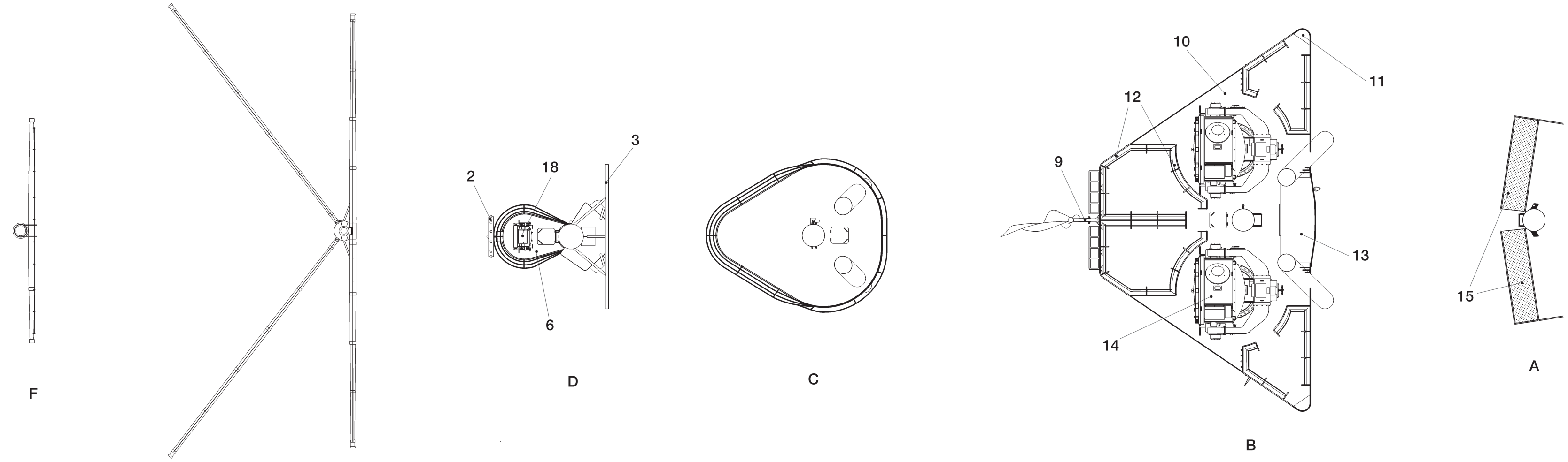

D2/13

D2/15 RIGHT PROFILE, AFTER MID-42 (FRAGMENT)
D2/16 BACK VIEW, AFTER MID-42 (FRAGMENT)

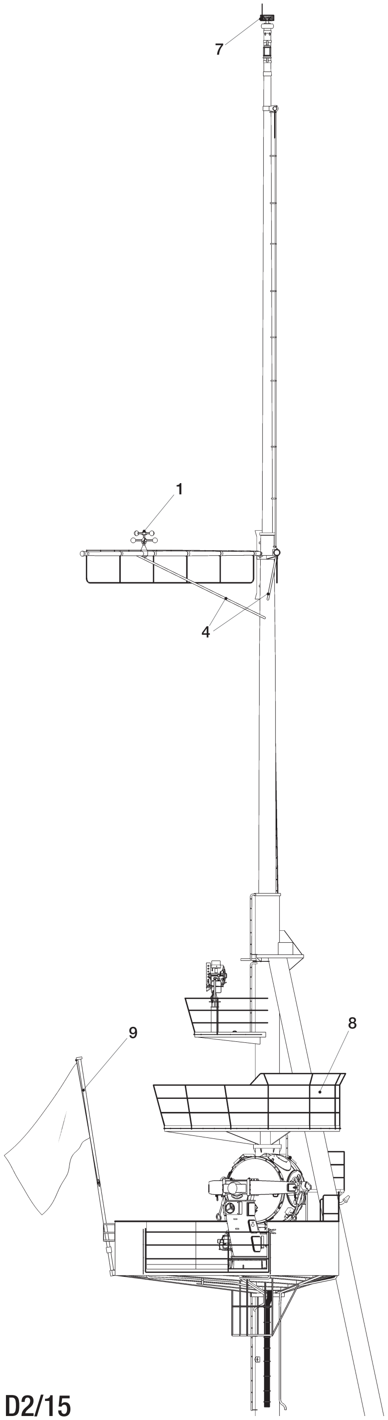

D2/15

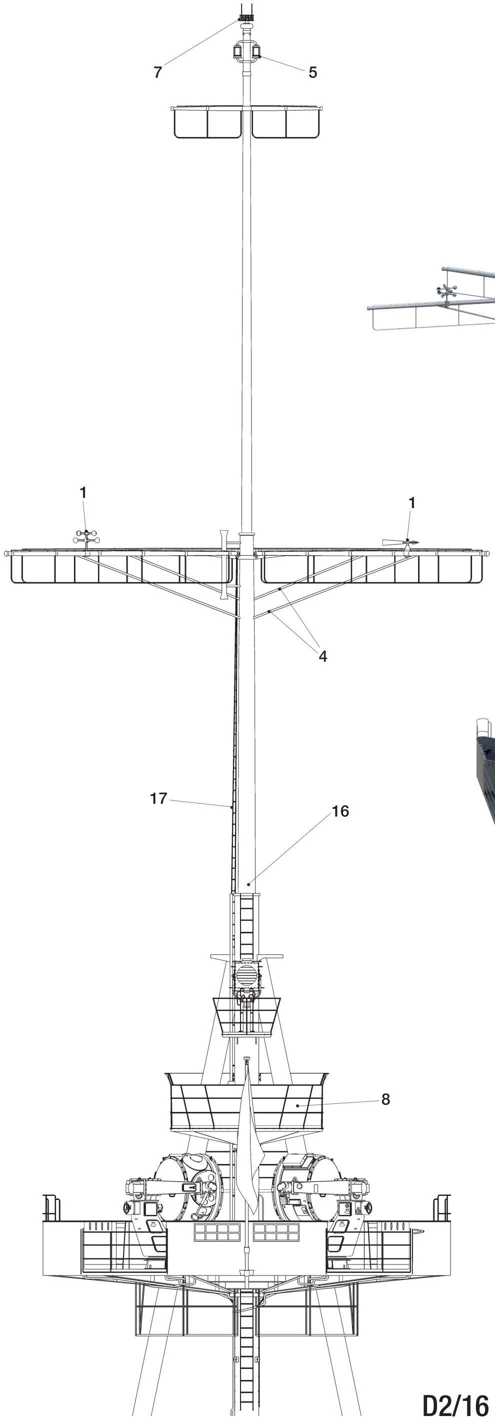

D2/16

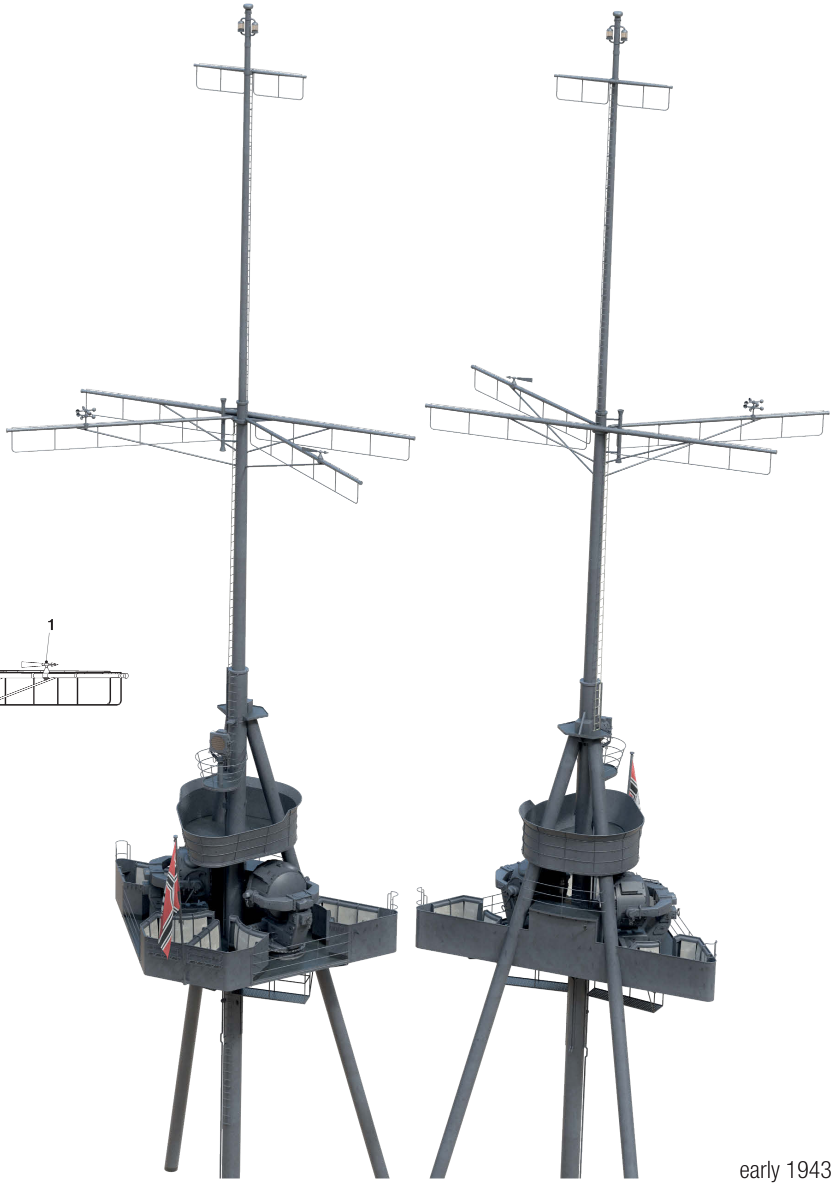

early 1943

JACK STAFF (1/100 SCALE)

D2/17 RIGHT PROFILE

D2/18 BACK VIEW

D2/19 PLAN

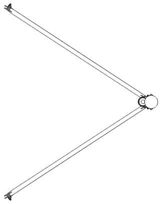

D2/19

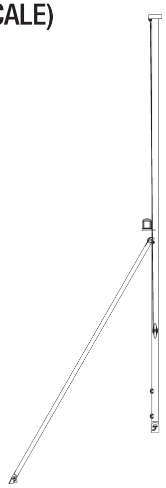

D2/17

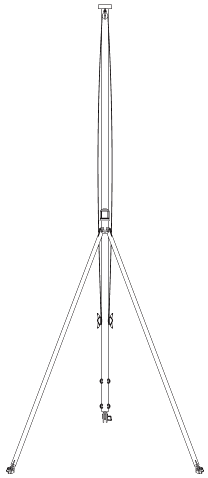

D2/18

ENSIGN STAFF, UNTIL MID-1939 ONLY (1/100 SCALE)

D2/20 RIGHT PROFILE

1 Stern light (white)
2 Wake light (white)

D2/21 FRONT VIEW

D2/22 BACK VIEW

D2/23 PLAN

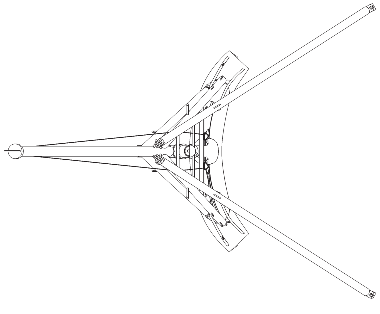

D2/23

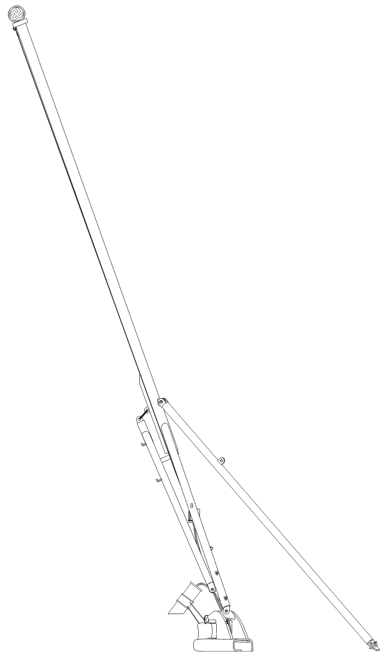

D2/20

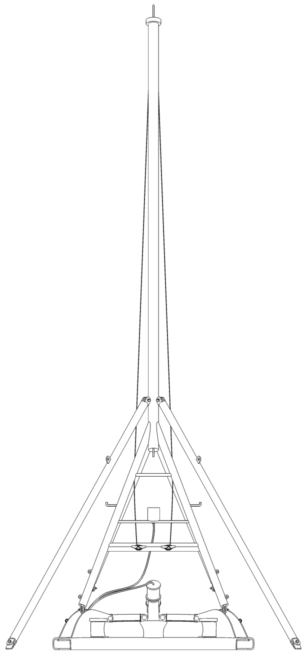

D2/21

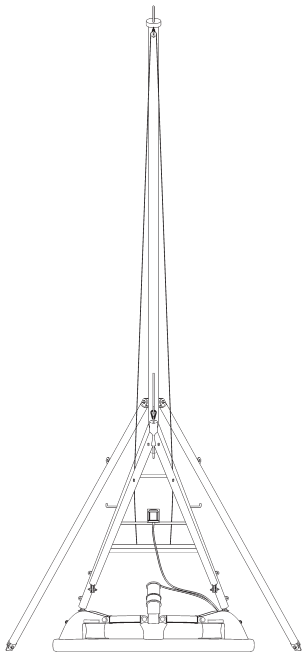

D2/22

D2/24 NAVAL ENSIGN OF THE KRIEGSMARINE (*REICHSKRIEGSFLAGGE*)
D2/25 ADMIRAL'S FLAG (*ADMIRALSFLAGGE*)
D2/26 JACK (*GÖSCH*)

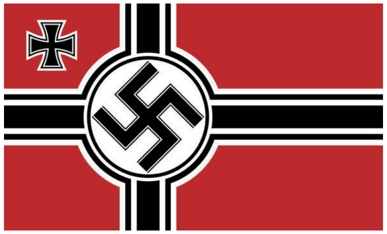

D2/24

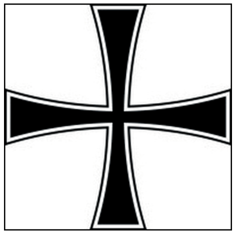

D2/25

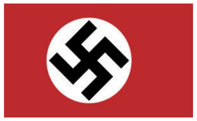

D2/26

RIGGED FORE BOAT BOOM (1/150 SCALE)

D2/27 RIGHT PROFILE
D2/28 FRONT VIEW

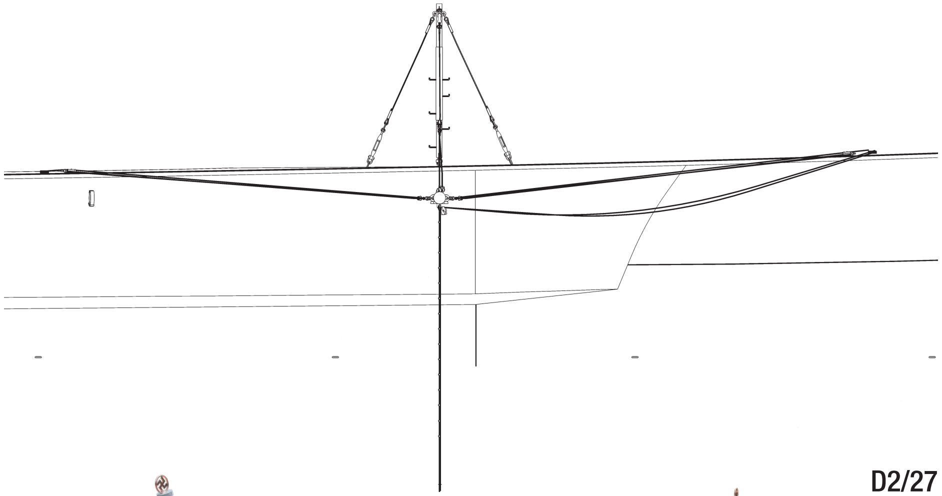

D2/27

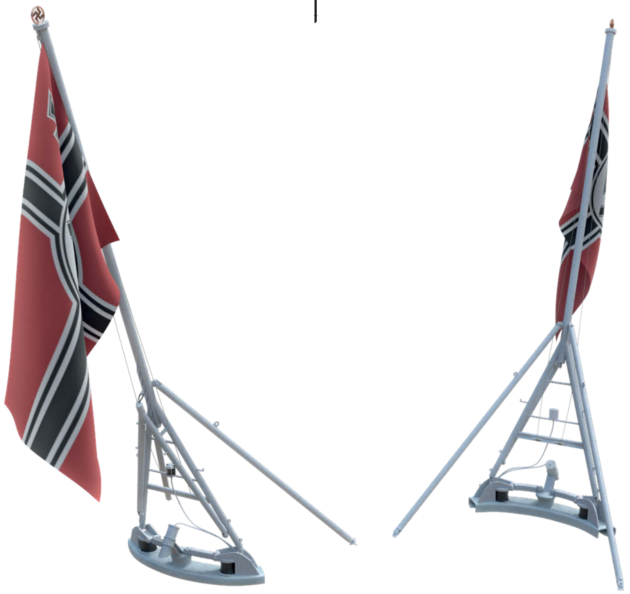

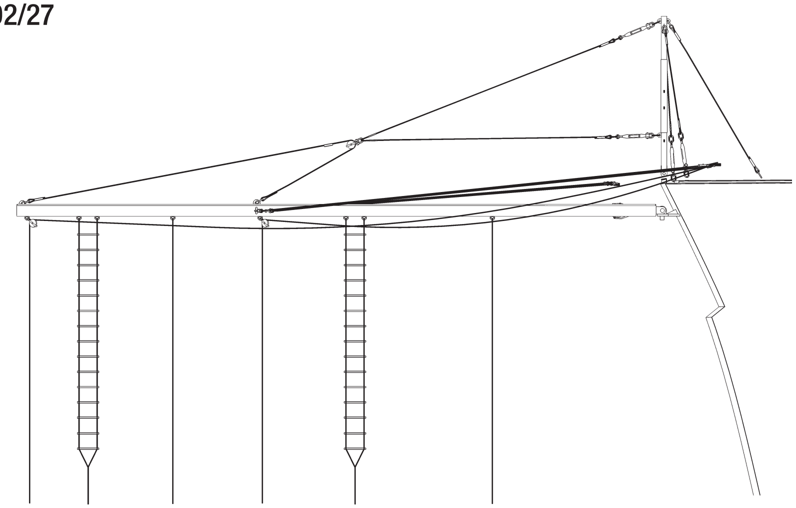

D2/28

RIGGED FORE BOAT BOOM (1/150 SCALE)

D2/29 PLAN

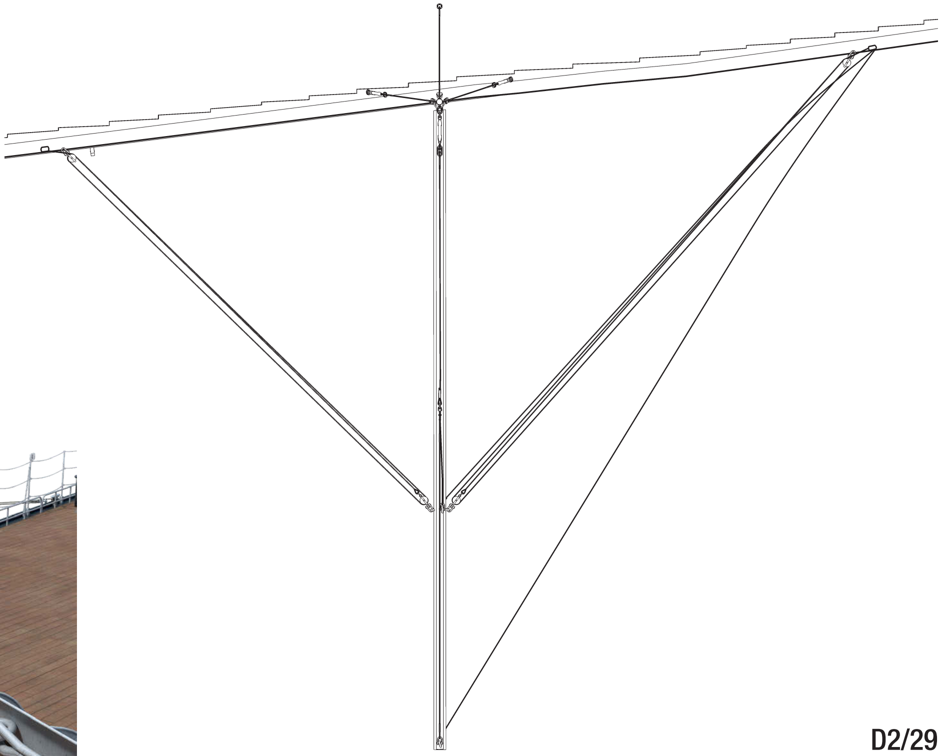

D2/29

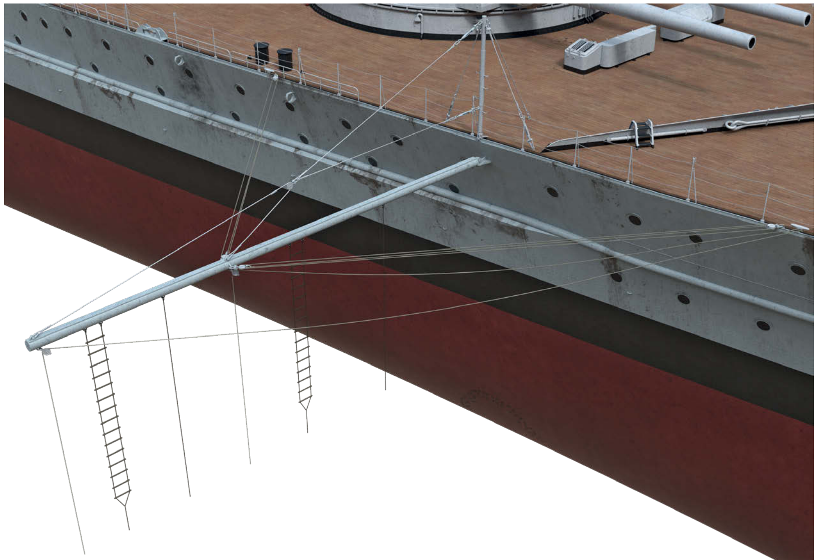

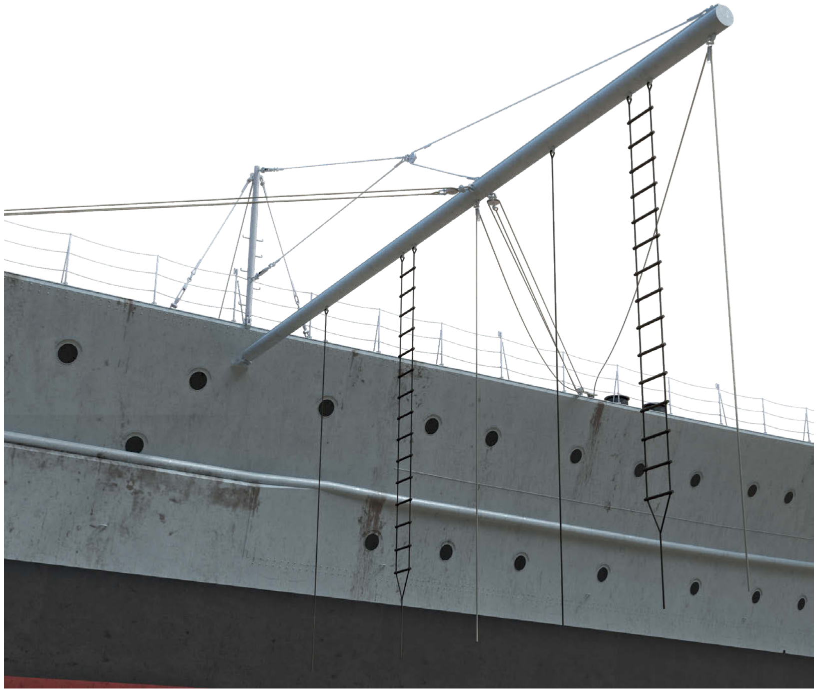

RIGGED BOAT DAVIT, SHOWN WITHOUT THE CUTTER FOR CLARITY (1/100 SCALE)

D2/30 RIGHT PROFILE

D2/31 FRONT VIEW

D2/32 PLAN

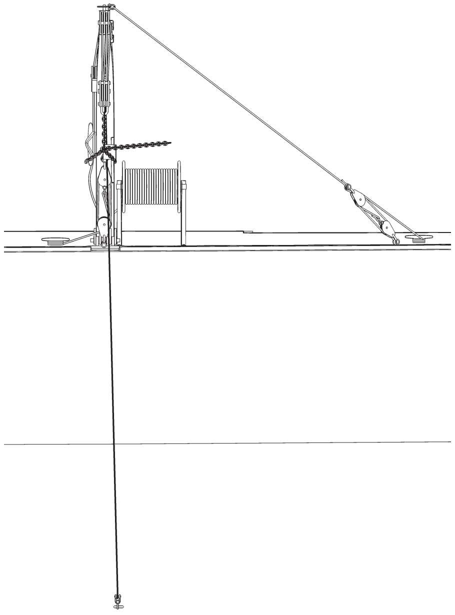

D2/30

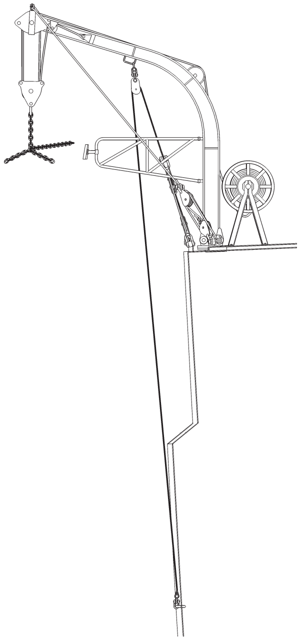

D2/31

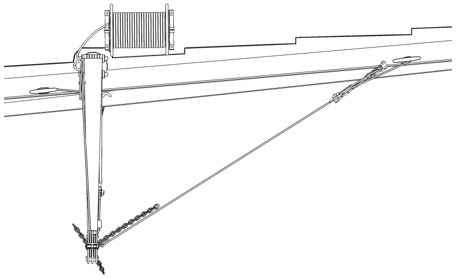

D2/32

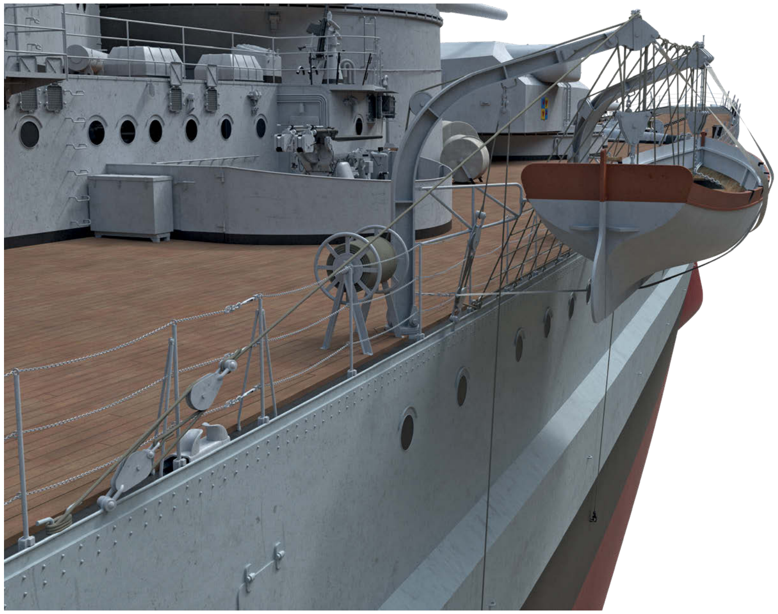

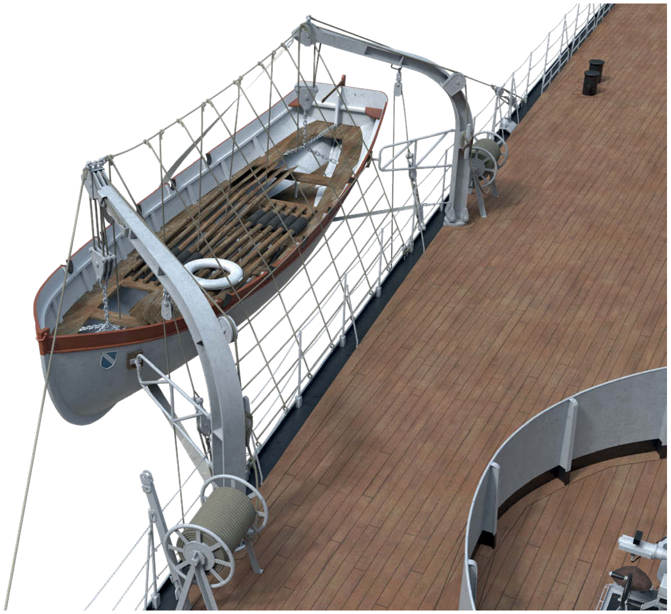

RIGGED ACCOMMODATION LADDER (1/100 SCALE)

D2/33 RIGHT PROFILE
D2/34 BACK VIEW
D2/35 PLAN

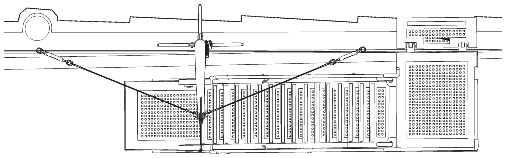

D2/35

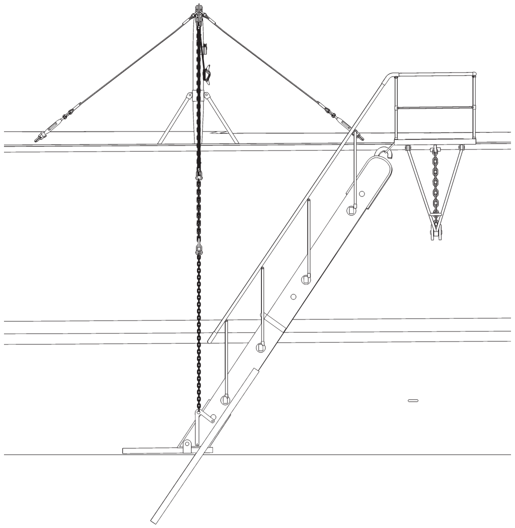

D2/33

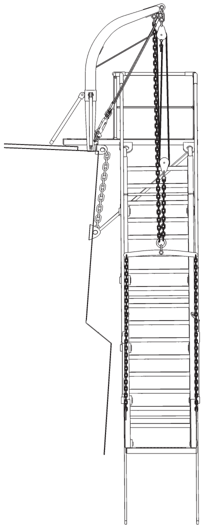

D2/34

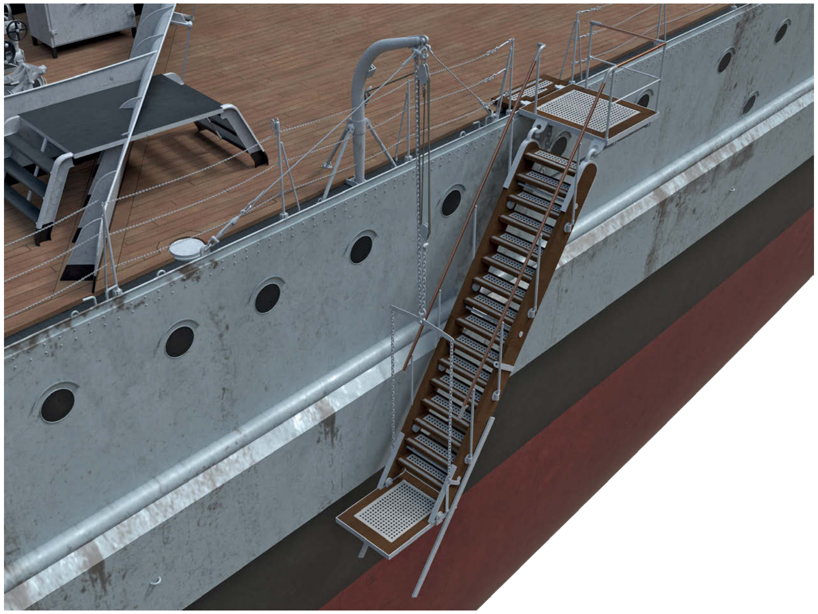

MAIN BOAT AND AIRCRAFT CRANE (1/150 SCALE)

D2/36 RIGHT PROFILE

D2/37 LEFT PROFILE

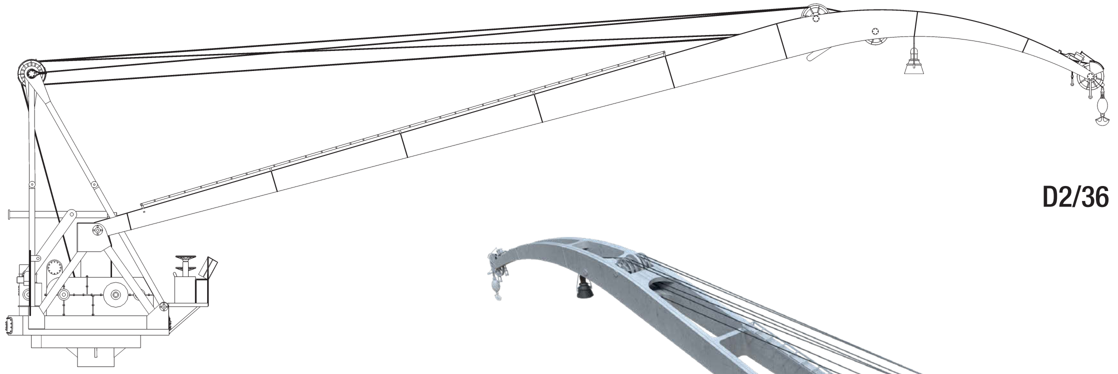

D2/36

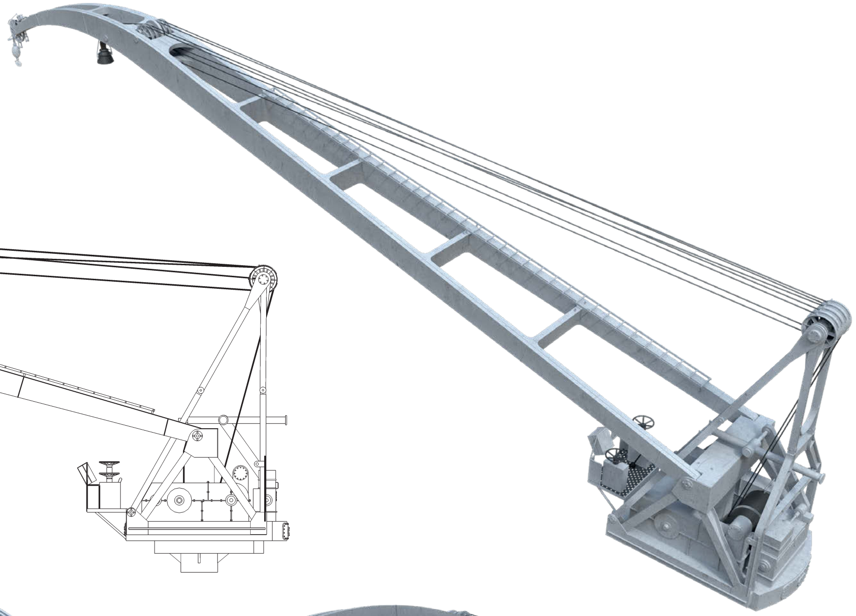

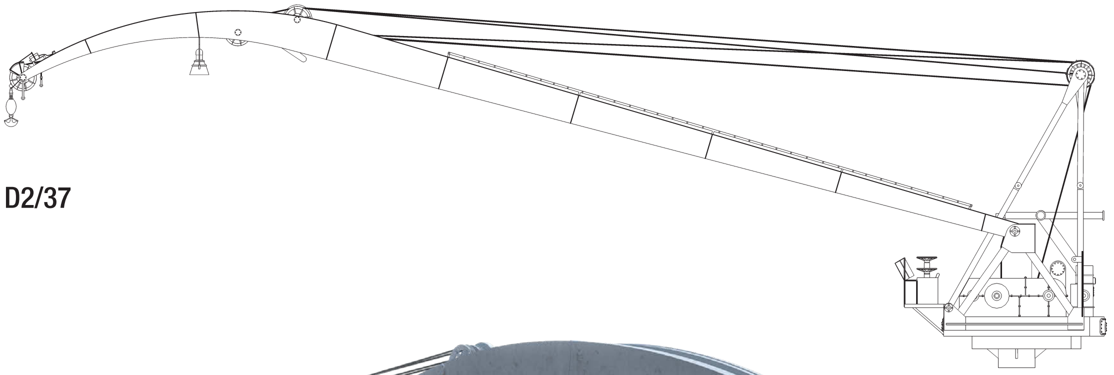

D2/37

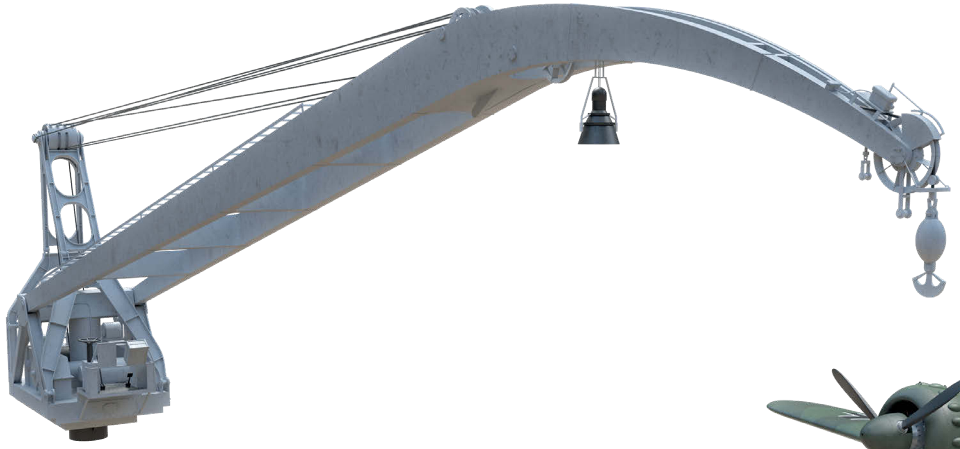

MAIN BOAT AND AIRCRAFT CRANE (1/150 SCALE)

D2/38 FRONT VIEW

D2/39 BACK VIEW

D2/40 PLAN

D2/41 RIGHT PROFILE BEFORE MODIFICATION IN MID-1940 (FRAGMENT)

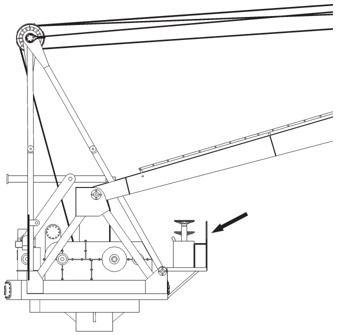

D2/41

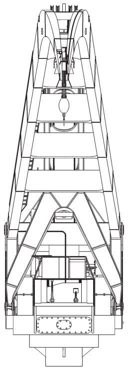

D2/38

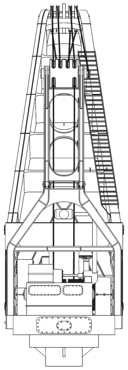

D2/39

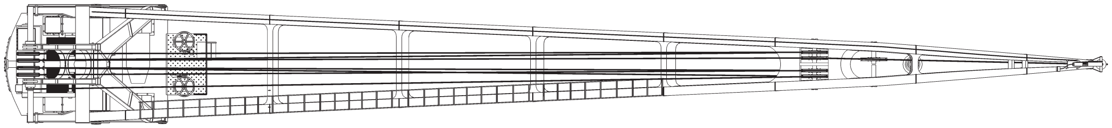

D2/40

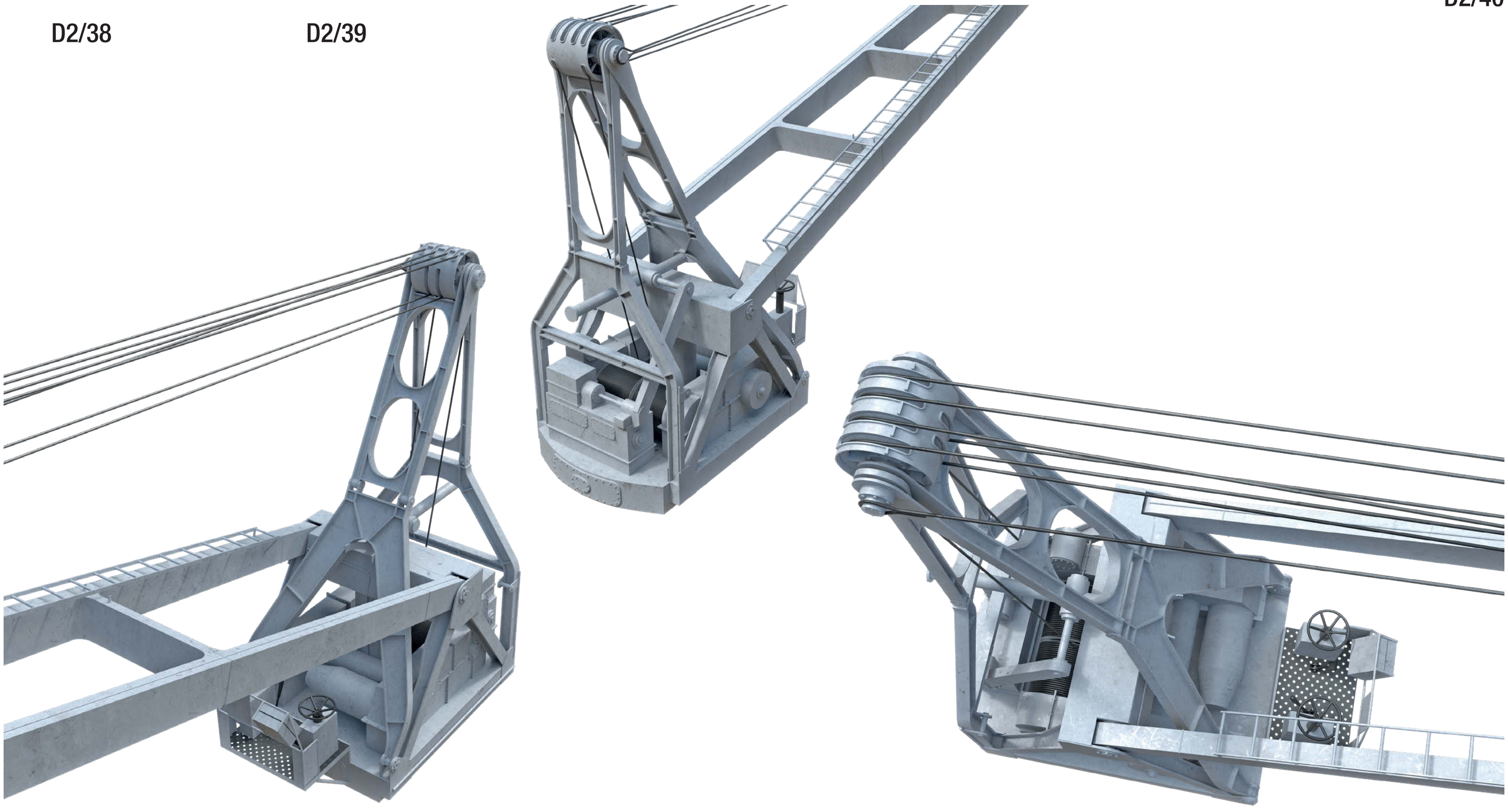

STARBOARD SIDE BOAT CRANE FROM FORE SUPERSTRUCTURE, LOWER MAST DECK LEVEL; PORT SIDE CRANE SYMMETRICAL (1/150 SCALE)

D2/42 RIGHT PROFILE
D2/43 LEFT PROFILE
D2/44 FRONT VIEW
D2/45 BACK VIEW
D2/46 PLAN

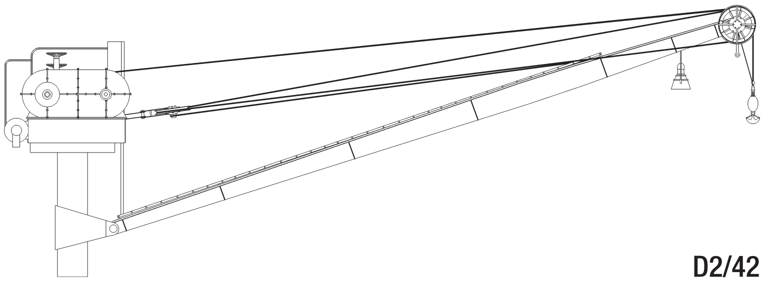

D2/42

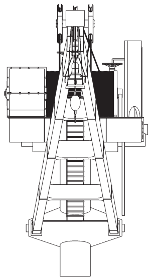

D2/44

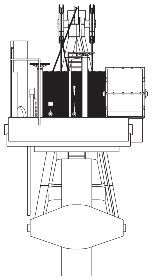

D2/45

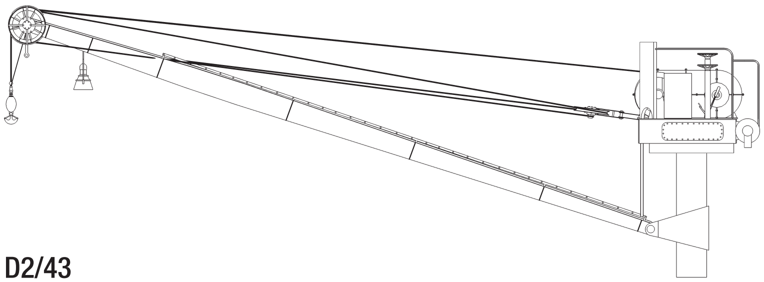

D2/43

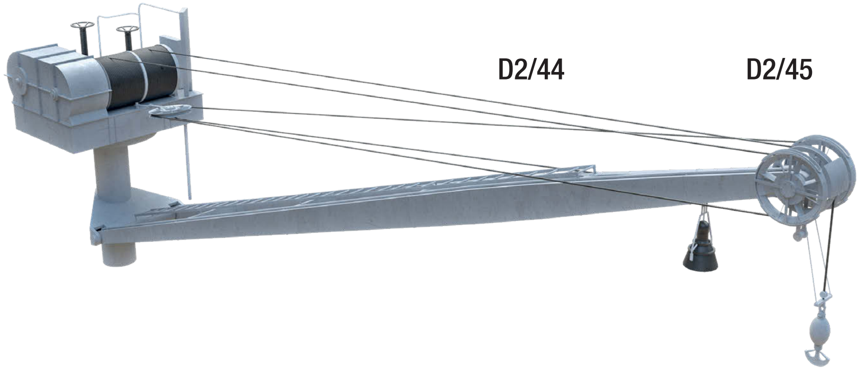

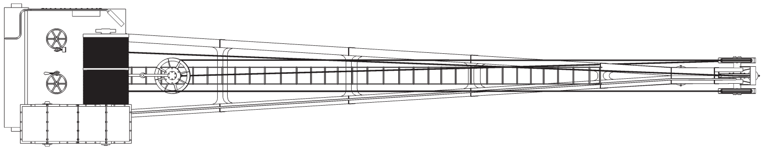

D2/46

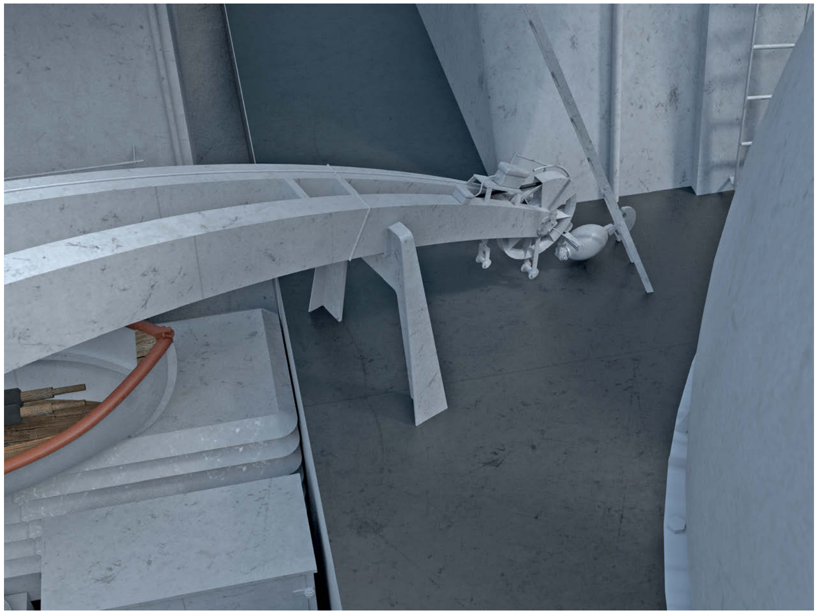

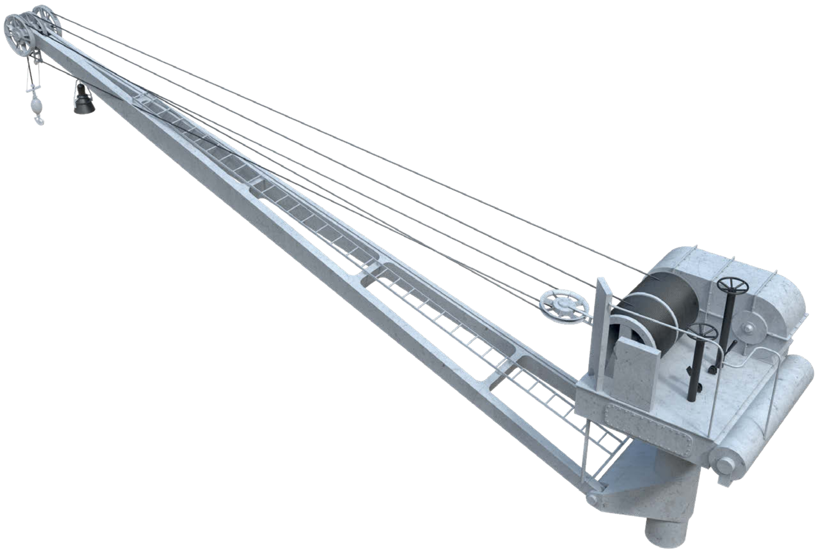

28CM SK C/34 GUNS IN THE DRH L C/34 TRIPLE TURRET (1/125 SCALE)

E1/1 TURRET A – RIGHT PROFILE

E1/2 TURRET A – FRONT VIEW

E1/3 TURRET A – BACK VIEW

E1/1–18 28CM TRIPLE TURRET

1 Barbette
2 Train locking mechanism
3 Awning rail (only turrets A and C)
4 Ladder
5 Collapsible hand grip (in raised position)
6 Smoke outlet
7 Barrel
8 Barrel at maximum elevation of +40°
9 Muzzle plug
10 Removable blast bag (used from mid-1939)
11 Sight under sliding shield
12 Inflatable raft container
13 C/6 Periscope under protective cover
14 C/6 Periscope without protective cover
15 Turret crest (present on all turrets for a short period of time around mid-1939)
16 Rangefinder arm hood
17 Rangefinder arm
18 Hinged rangefinder shield (open)
19 Hinged rangefinder shield (closed)
20 Sealed hole after removal of rangefinder (only turret A, from December 1941–January 1942)
21 Channel bar (welded to all turrets around December 1941–January 1942)
22 Access hatch
23 Empty propellant casing ejection point
24 Vent (added in mid-1940)
25 Goose vent
26 Aircraft catapult (only on turret C; removed in March 1940)
27 Main artillery sub-calibre barrel container (only turrets A and C)
28 Loudspeaker (turret C only)
29 Fire hydrant
30 Quadruple 2cm gun mount (present on roof of turret B only in February 1942)
31 Ammunition locker (present on roof of turret B only in February 1942)

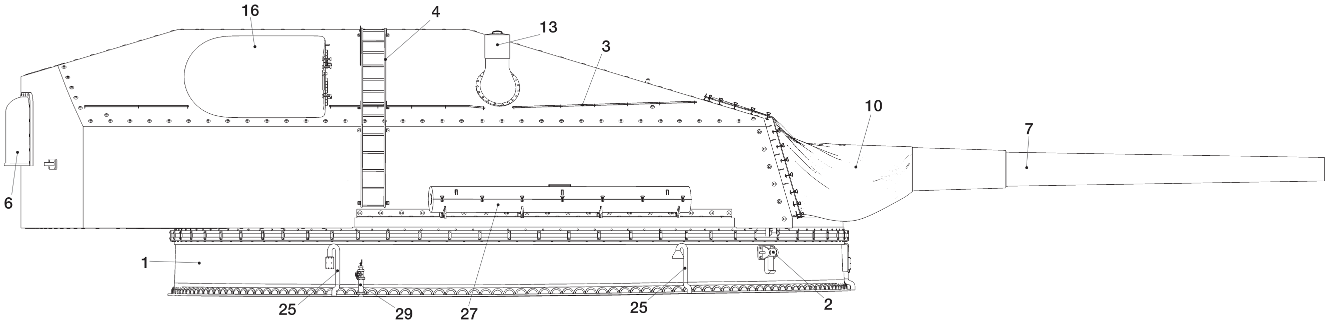

E1/1

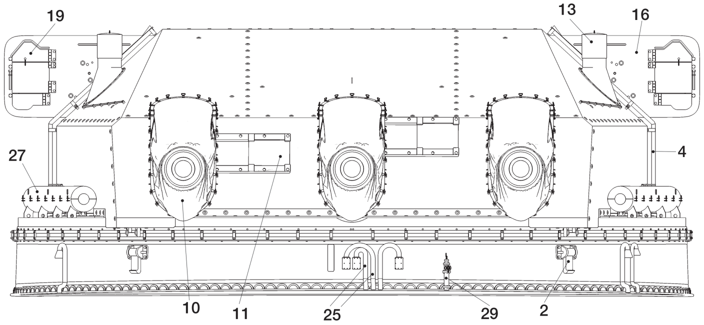

E1/2

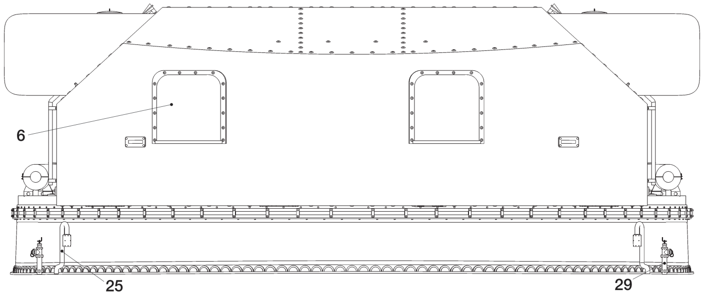

E1/3

E1/4 TURRET A – PLAN
E1/5 BARBETTE OF TURRET A – RIGHT PROFILE
E1/6 TURRET A – BOTTOM VIEW (FRAGMENT)

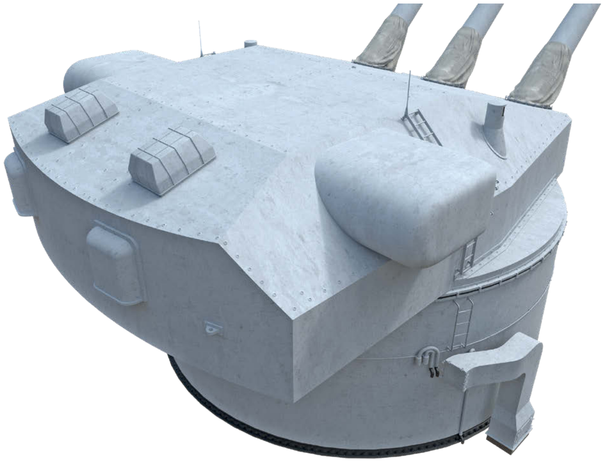

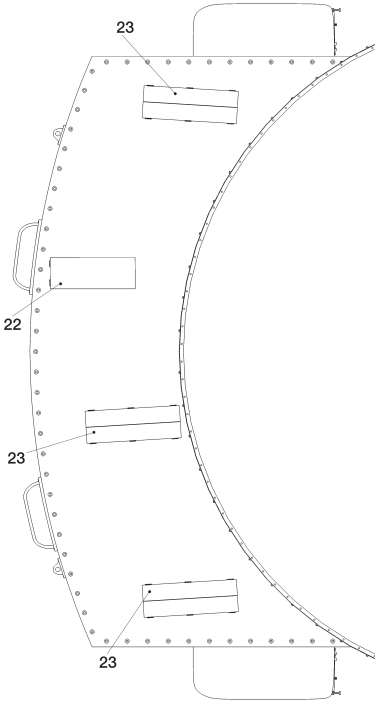

E1/6

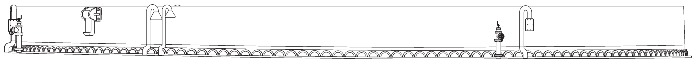

E1/5

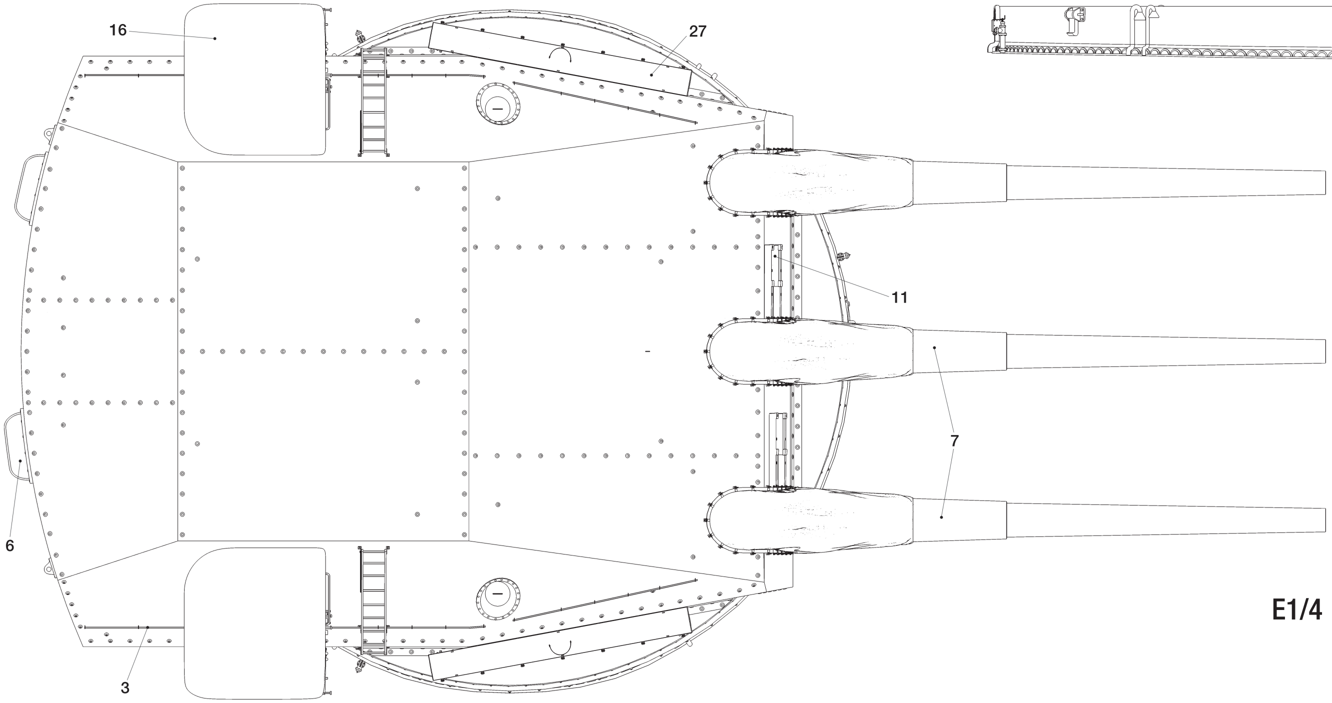

E1/4

28CM SK C/34 GUNS IN THE DRH L C/34 TRIPLE TURRET (1/125 SCALE)

E1/7 TURRET B – RIGHT PROFILE (FRAGMENT)
E1/8 BARBETTE OF TURRET B BEFORE MODIFICATIONS IN MID-1940 – RIGHT PROFILE (FRAGMENT)
E1/9 TURRET B – FRONT VIEW (FRAGMENT)

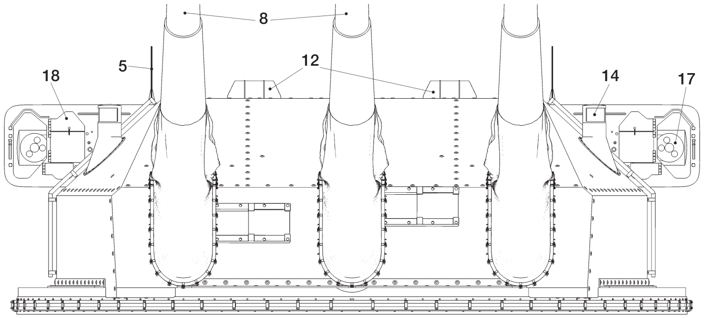

E1/9

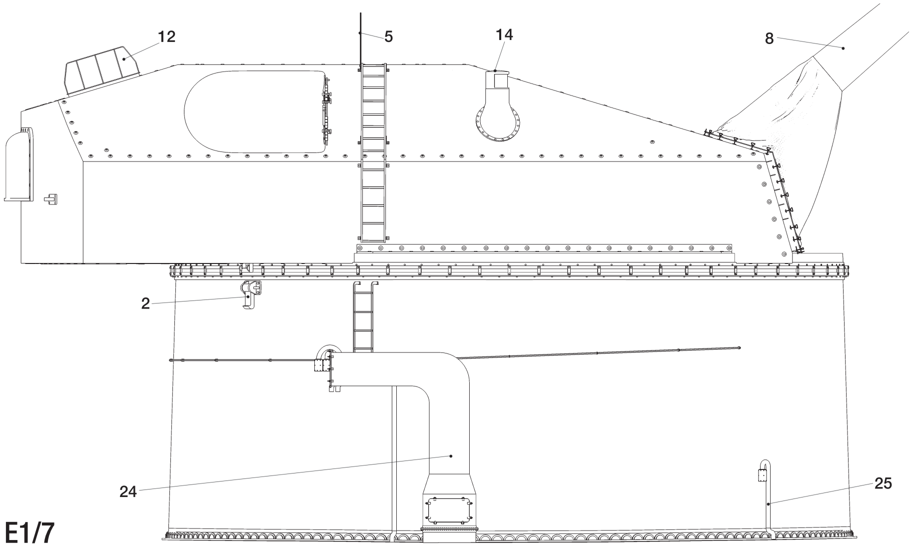

E1/7

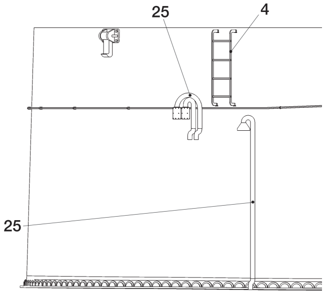

E1/8

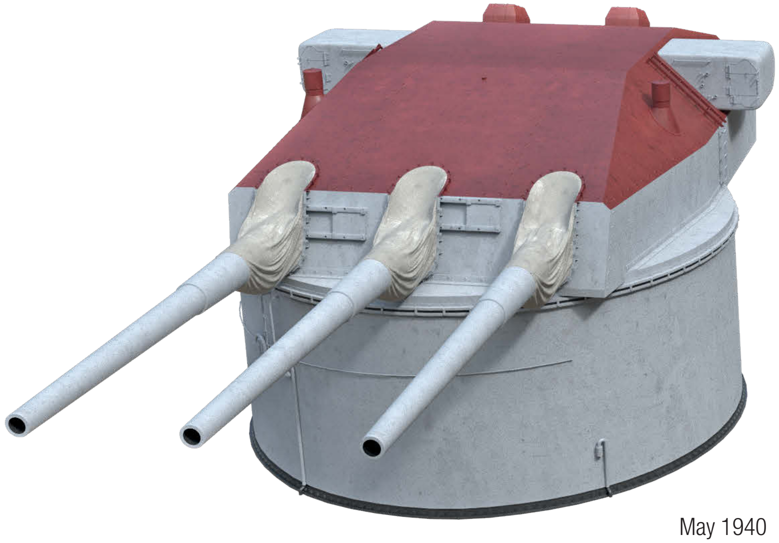

May 1940

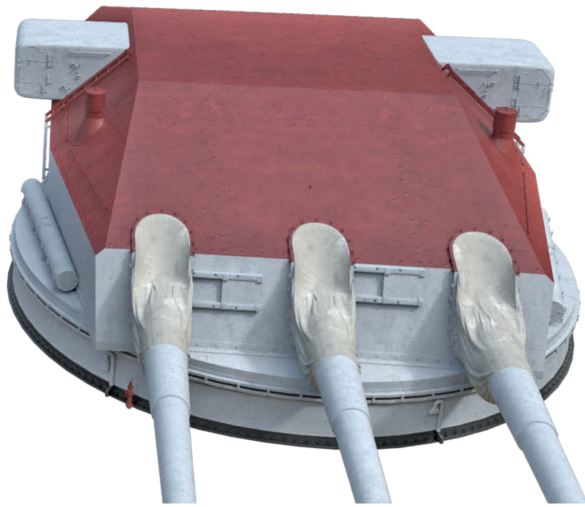

E1/10 TURRET C – LEFT PROFILE (FRAGMENT)
E1/11 TURRET C – FRONT VIEW

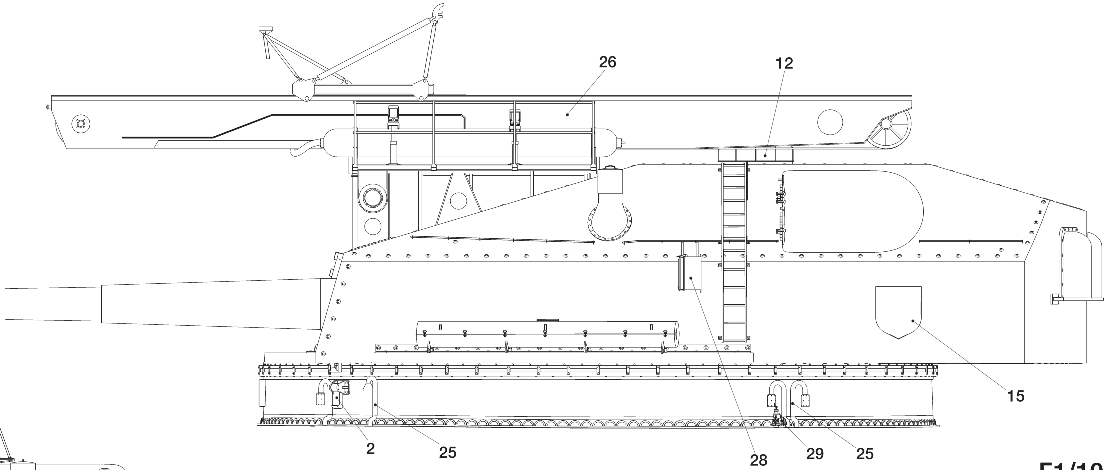

E1/10

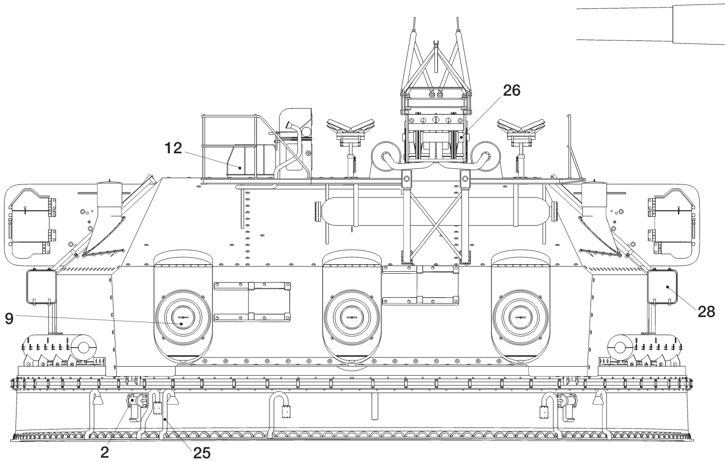

E1/11

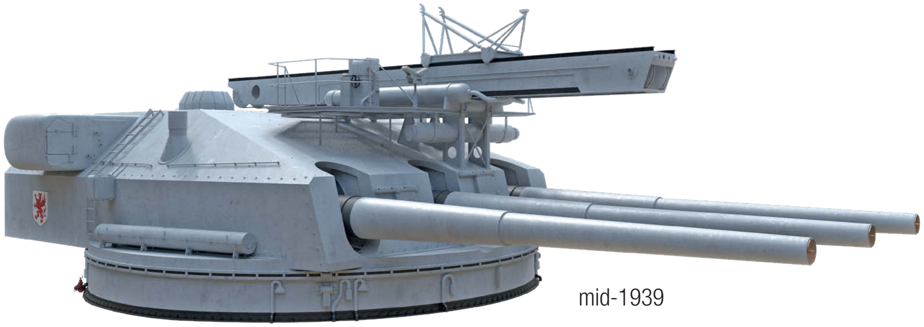

mid-1939

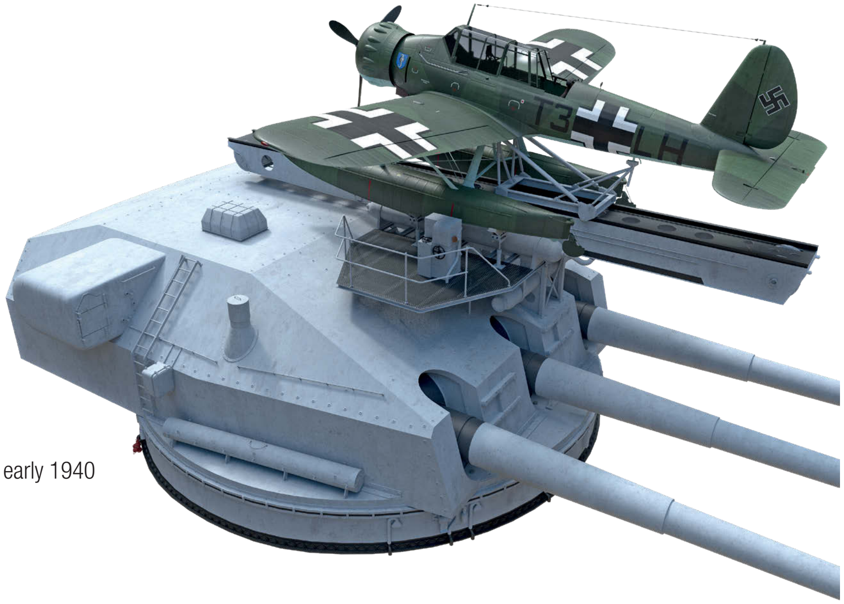

early 1940

early 1940

28CM SK C/34 GUNS IN THE DRH L C/34 TRIPLE TURRET (1/125 SCALE)

E1/12 TURRET C – PLAN (FRAGMENT)

E1/13 TURRET A AFTER MODIFICATIONS IN DECEMBER 1941–JANUARY 1942 – RIGHT PROFILE (FRAGMENT)

E1/14 TURRET A AFTER MODIFICATIONS IN DECEMBER 1941– JANUARY 1942 – BACK VIEW

Turret A

(only a short period of time around mid-1939)

Turret B

Turret C

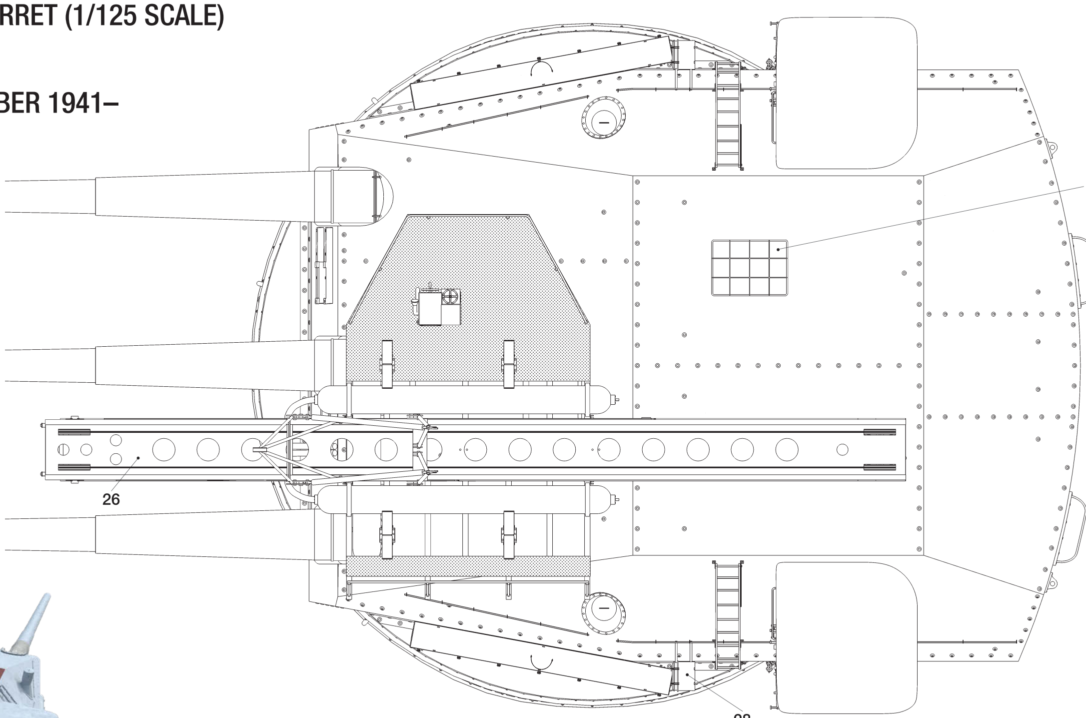

E1/12

late 1939

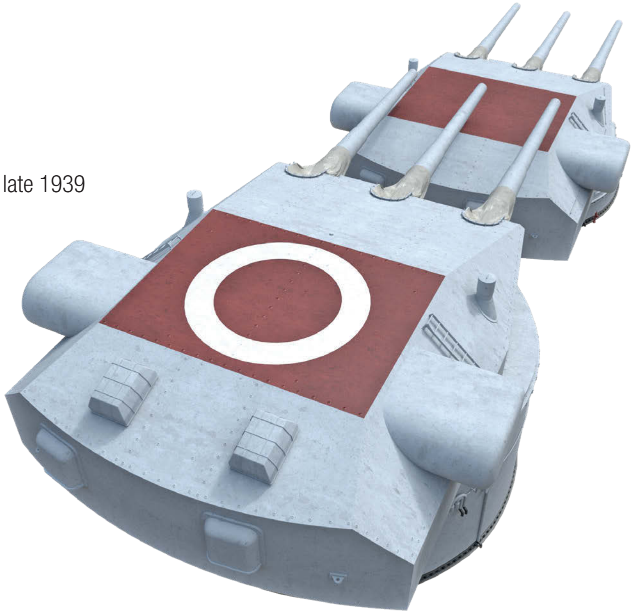

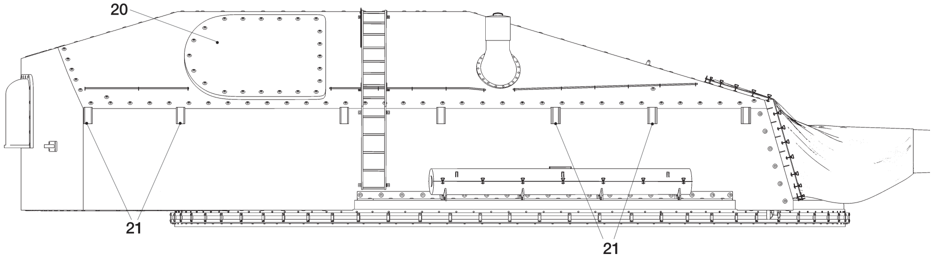

E1/13

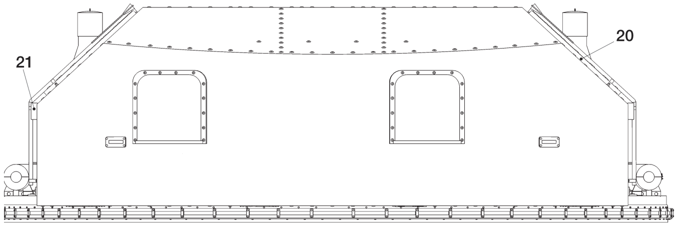

E1/14

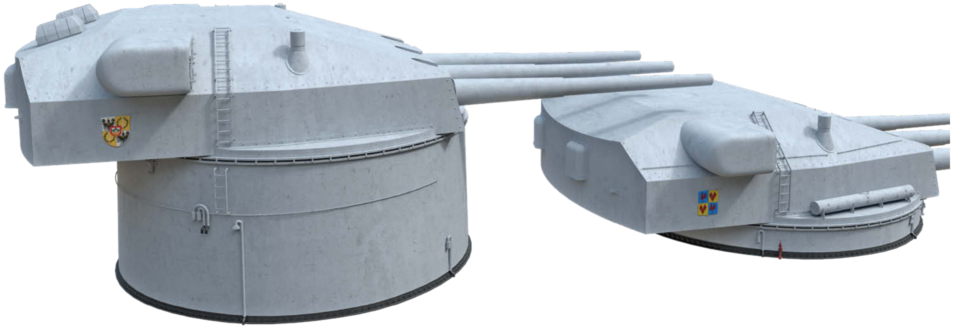

mid-1939

E1/15 TURRET B MODIFIED FOR OPERATION CERBERUS – LEFT PROFILE (FRAGMENT)
E1/16 TURRET B MODIFIED FOR OPERATION CERBERUS – FRONT VIEW

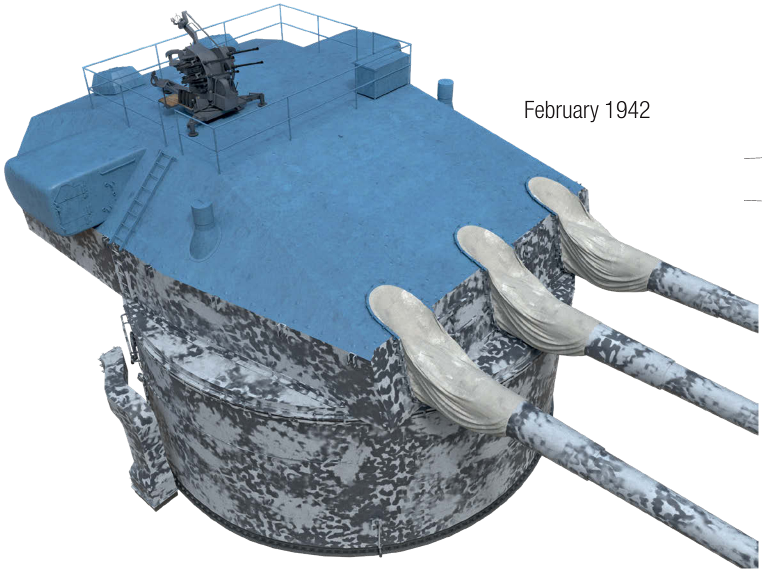

February 1942

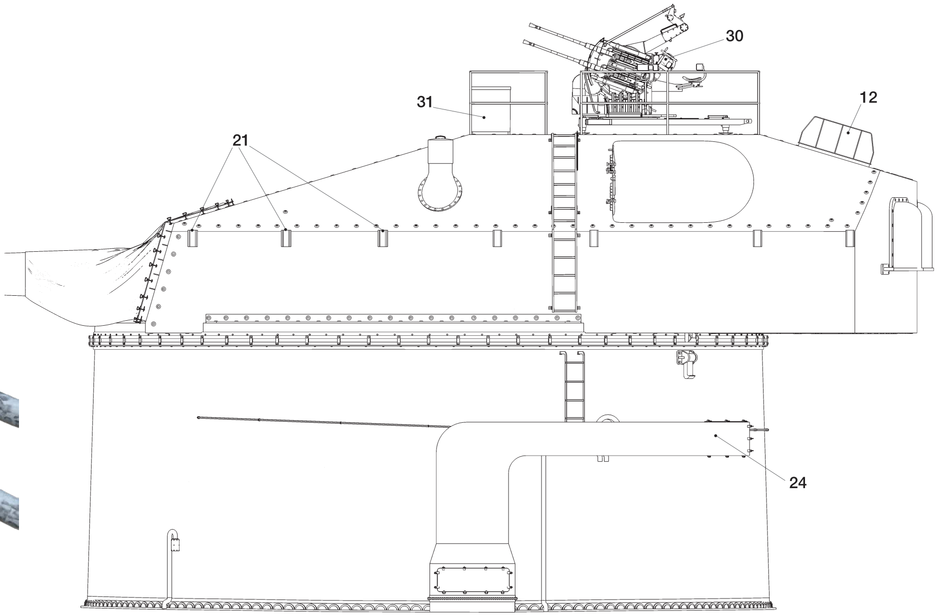

E1/15

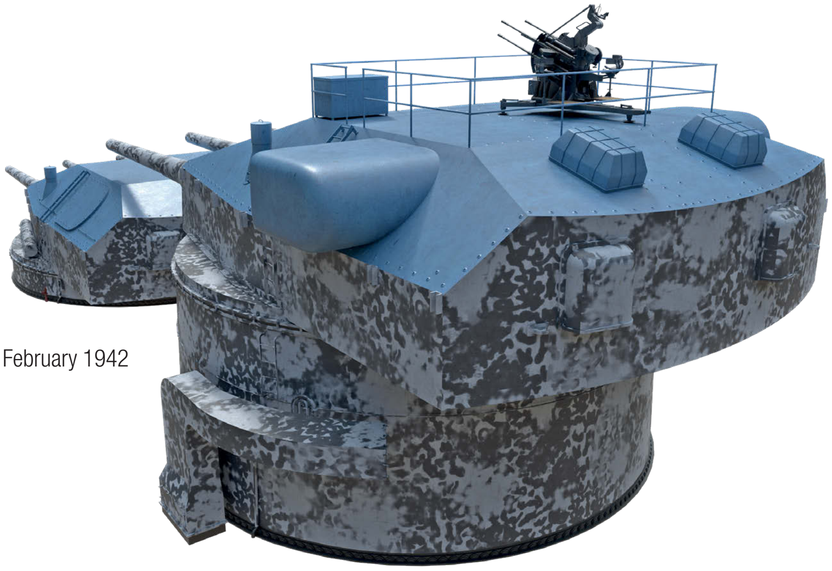

February 1942

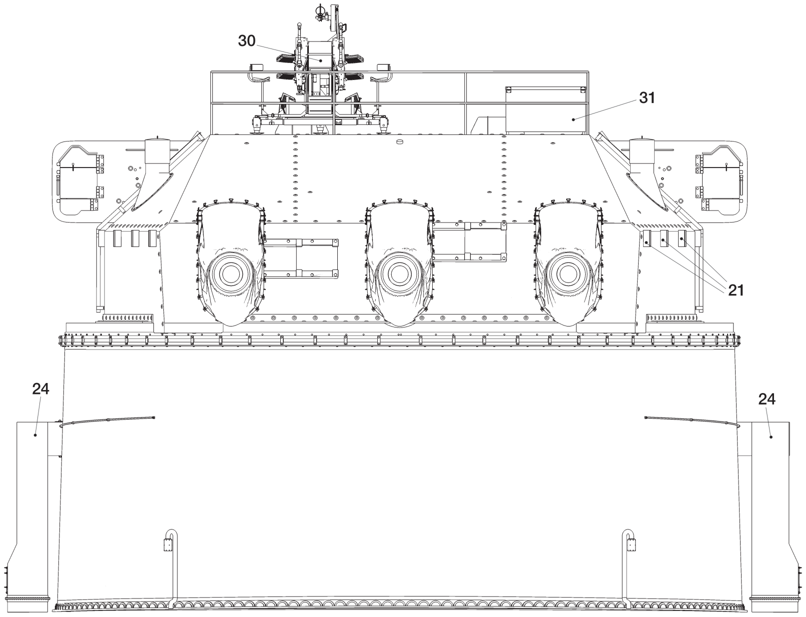

E1/16

28CM SK C/34 GUNS IN THE DRH L C/34 TRIPLE TURRET (1/125 SCALE)

E1/17 TURRET B MODIFIED FOR OPERATION CERBERUS – PLAN
E1/18 BARBETTE OF TURRET B AFTER MODIFICATIONS IN MID-1940 – PLAN (FRAGMENT)
E1/19 NAMES OF THE 28CM TURRETS ON BOARD (1/800 SCALE)

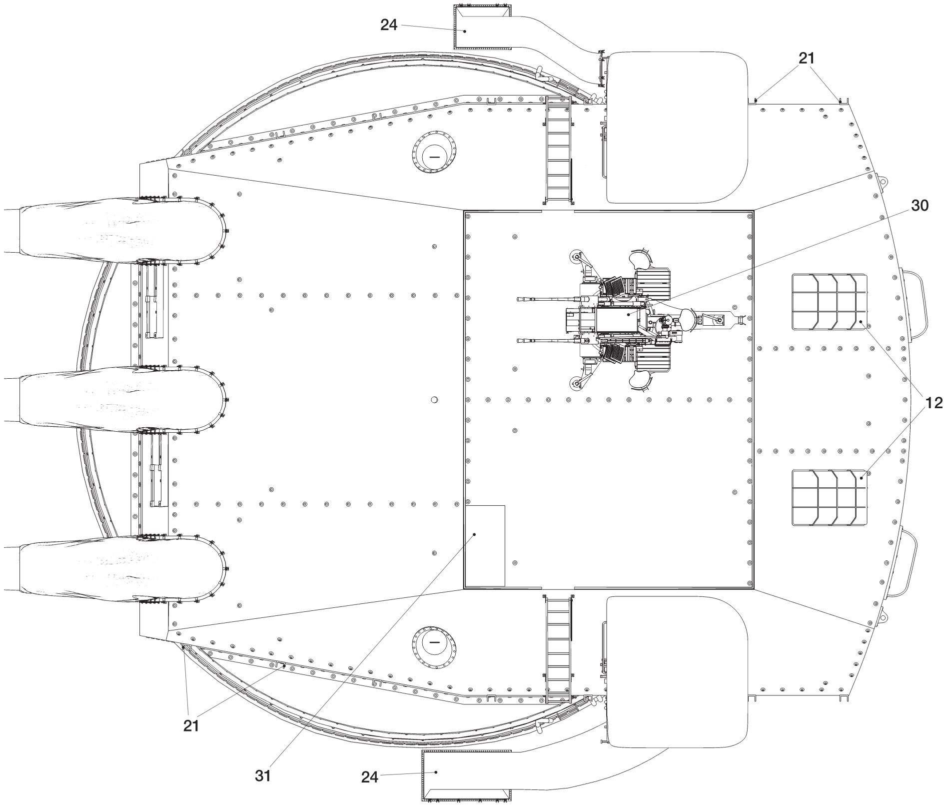

E1/17

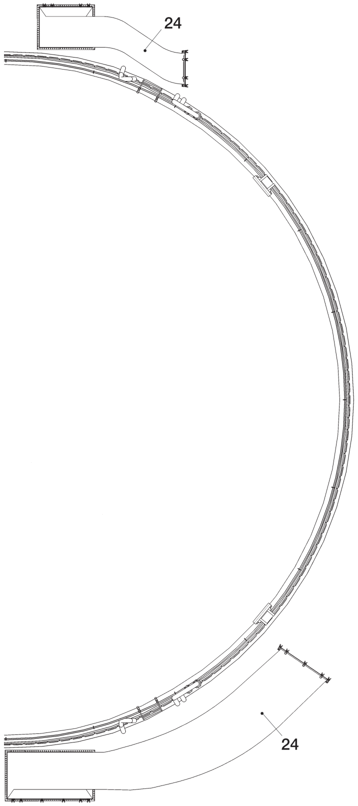

E1/18

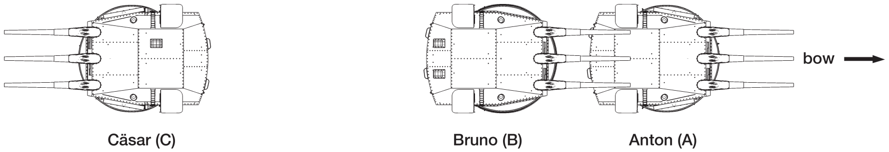

E1/19

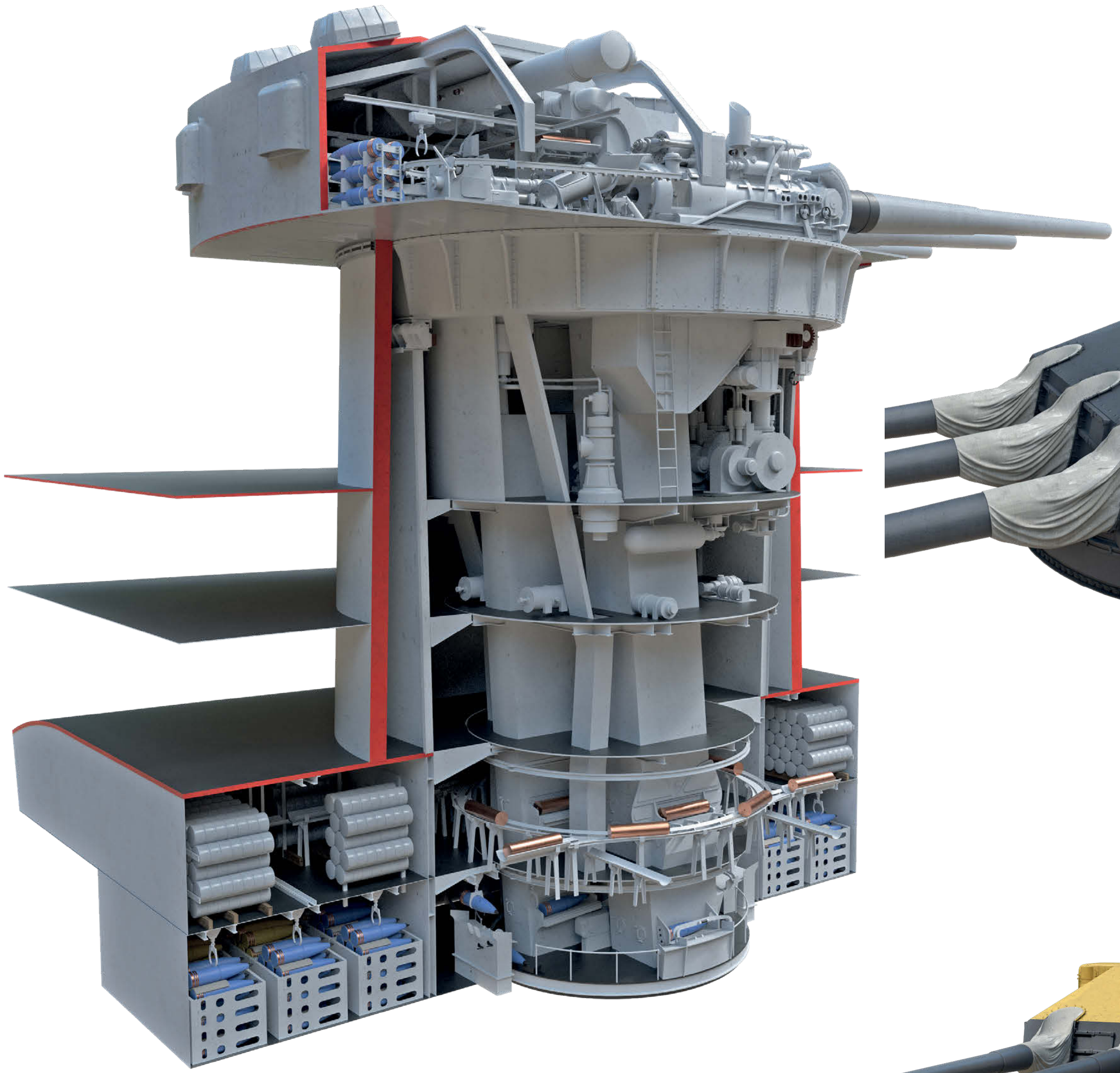

September 1943

early 1943

28CM SK C/34 GUNS IN THE DRH L C/34 TRIPLE TURRET – SECTIONS (1/125 SCALE)

E1/20 TURRET B WITH FORE AND AFT MAGAZINES – PROFILE

E1/20–29 28CM TRIPLE TURRET AND AMMUNITION MAGAZINES – SECTIONS

1 Armoured deck (*Panzerdeck*)
2 Barbette
3 Turret support structure
4 Train mechanism
5 Elevation mechanism
6 Machinery level
7 Intermediate level 1
8 Intermediate level 2 (turret B only)
9 Propellant handling level
10 Projectile handling level
11 Gun cradle
12 Gun breech
13 Curved shield plate
14 Smoke exhaust duct
15 Sight
16 Aiming controls
17 Hatch
18 Turret roof support
19 Main ammunition hoist pulleys
20 Main ammunition hoist basket unloader
21 C/6 Periscope
22 Loading swingarm
23 Empty case swingarm
24 Empty case slide
25 Empty cases ejection point
26 Ready-to-use ammunition rack
27 Recuperator

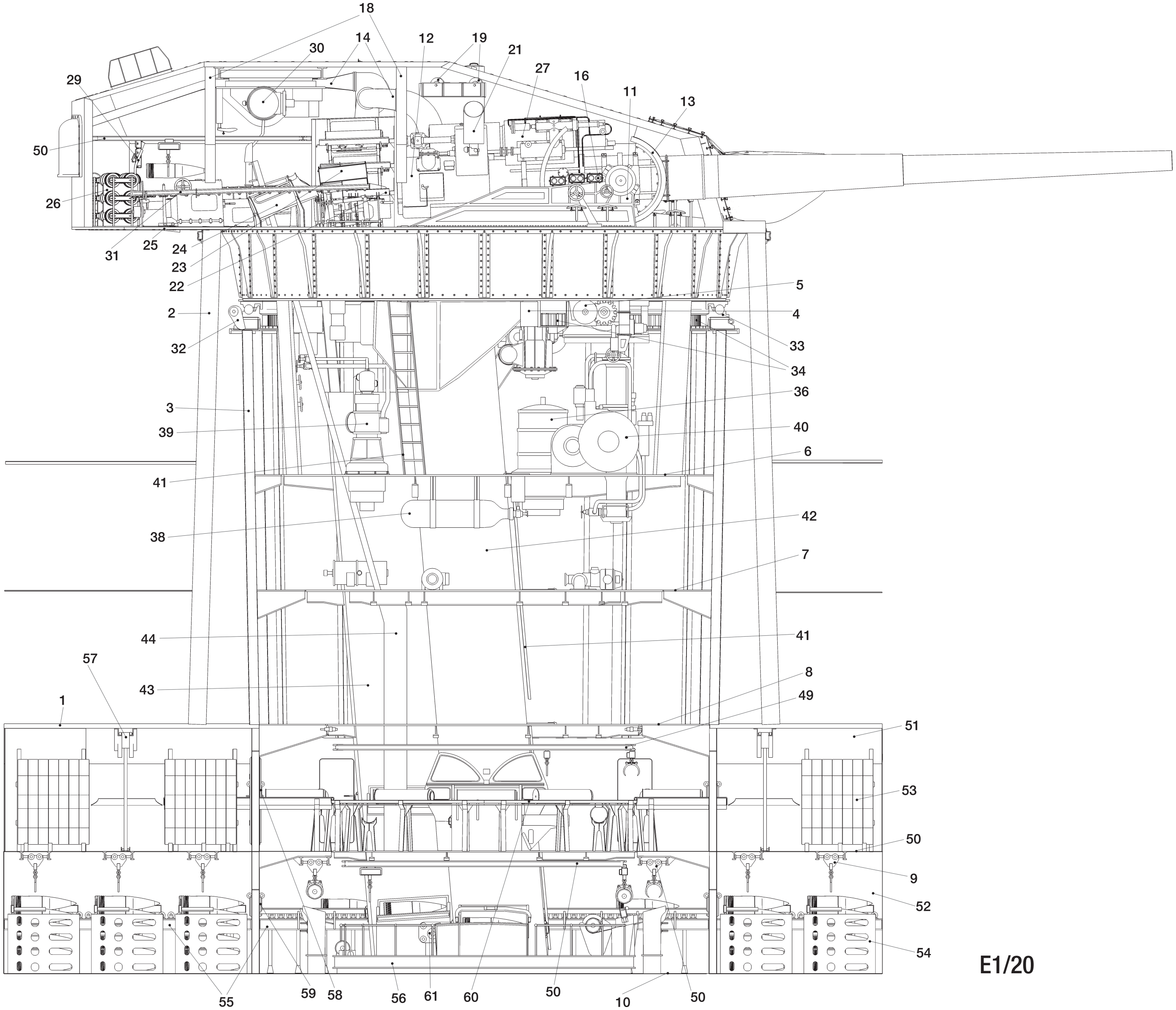

E1/20

28 Escape hatch
29 Turret commander's platform
30 Rangefinder arm
31 Rammer
32 Turret stop
33 Roller path
34 Sprocket
35 Train mechanism drive
36 Train mechanism motor generator
37 Auxiliary train mechanism drive
38 Compressed air tank
39 Hydraulic pump
40 Main ammunition hoist drive
41 Ladder
42 Main ammunition hoist shaft
43 Auxiliary hoist shaft (for projectiles and propellant main charges)
44 Auxiliary hoist shaft (for propellant fore charges and, in emergency, for propellant main charges)
45 Main hoist propellant loading table
46 Main hoist projectile loading table
47 Auxiliary hoist propellant loading swingarm
48 Auxiliary hoist projectile loading table
49 Propellant overhead crane
50 Projectile overhead crane
51 Propellant magazine
52 Projectile magazine
53 Propellant in sealed containers on racks
54 Projectile racks
55 Projectile rail
56 Projectile rotary ring
57 Propellant crane and trolley
58 Magazine wall opening for propellant transfer
59 Magazine wall opening for projectile transfer
60 Propellant transfer ring
61 Projectile magnetic transfer mechanism (for middle shaft)
62 Propellant fore charge rail
63 Rotary projectile tray

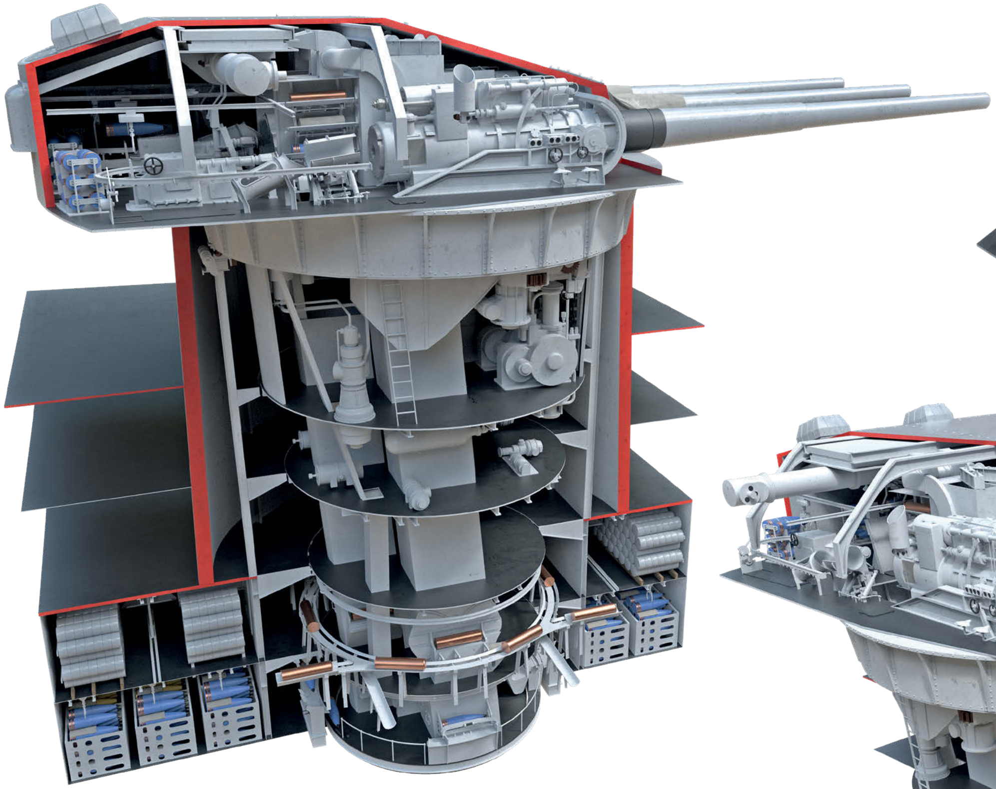

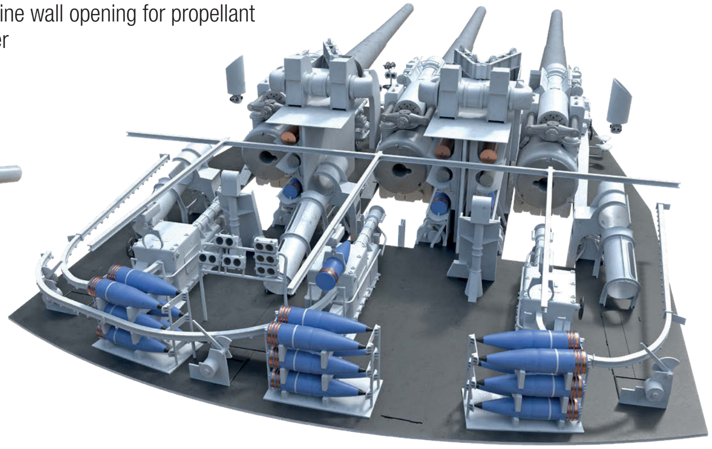

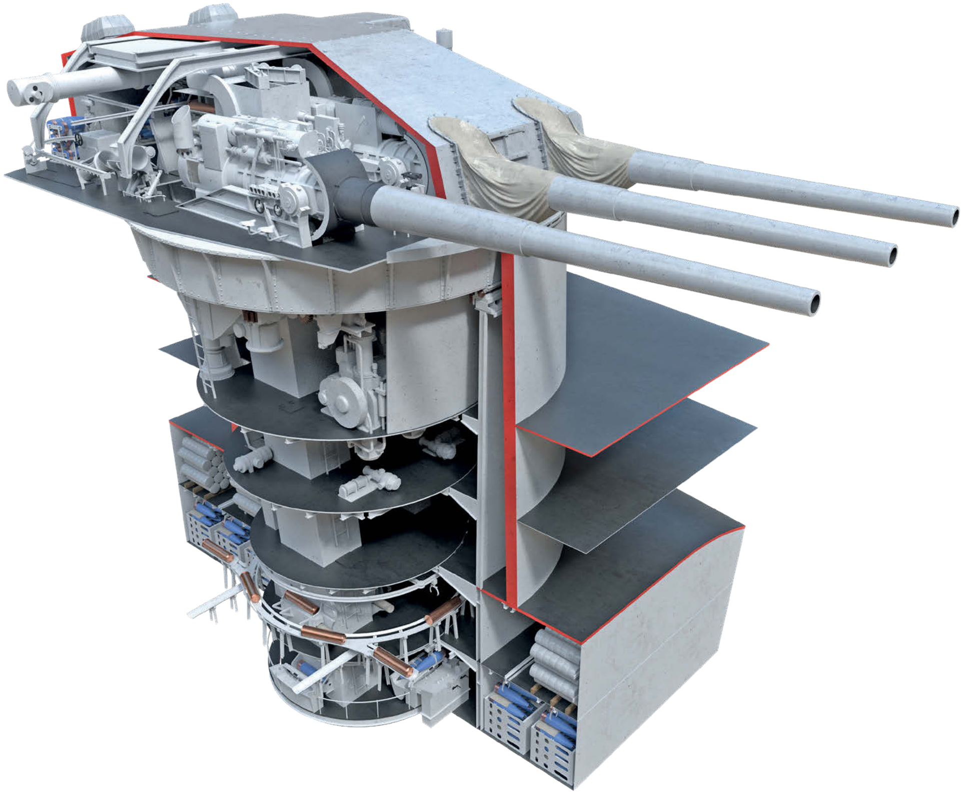

28CM SK C/34 GUNS IN THE DRH L C/34 TRIPLE TURRET – SECTIONS (1/125 SCALE)

E1/21 TURRET B – FRONT VIEW

E1/22 TURRET B – BACK VIEW

E1/23 TURRET B – FORE MAGAZINES – BACK VIEW

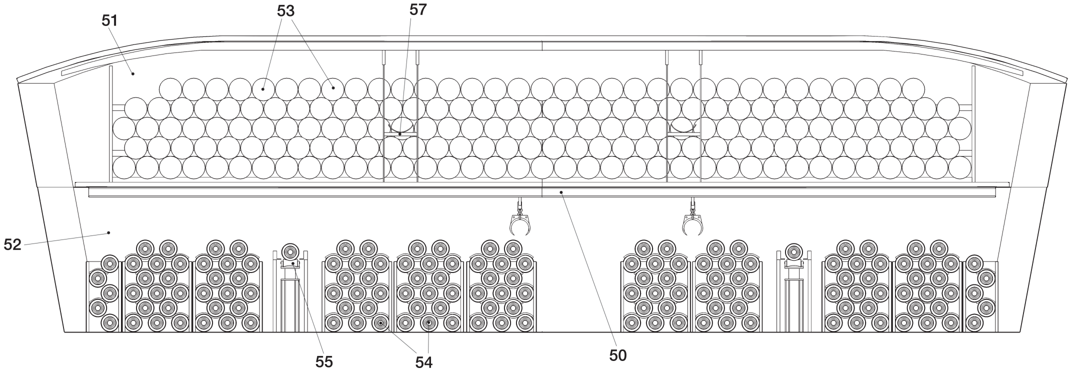

E1/23

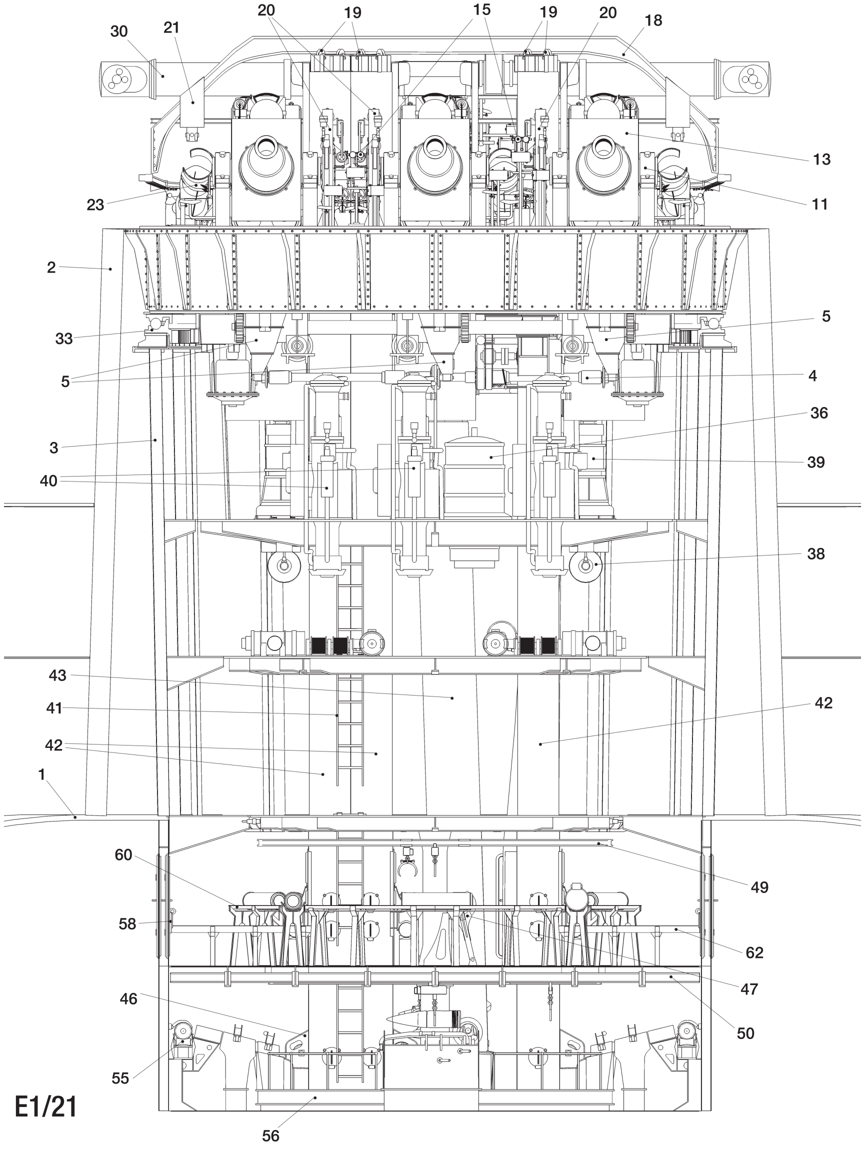

E1/21

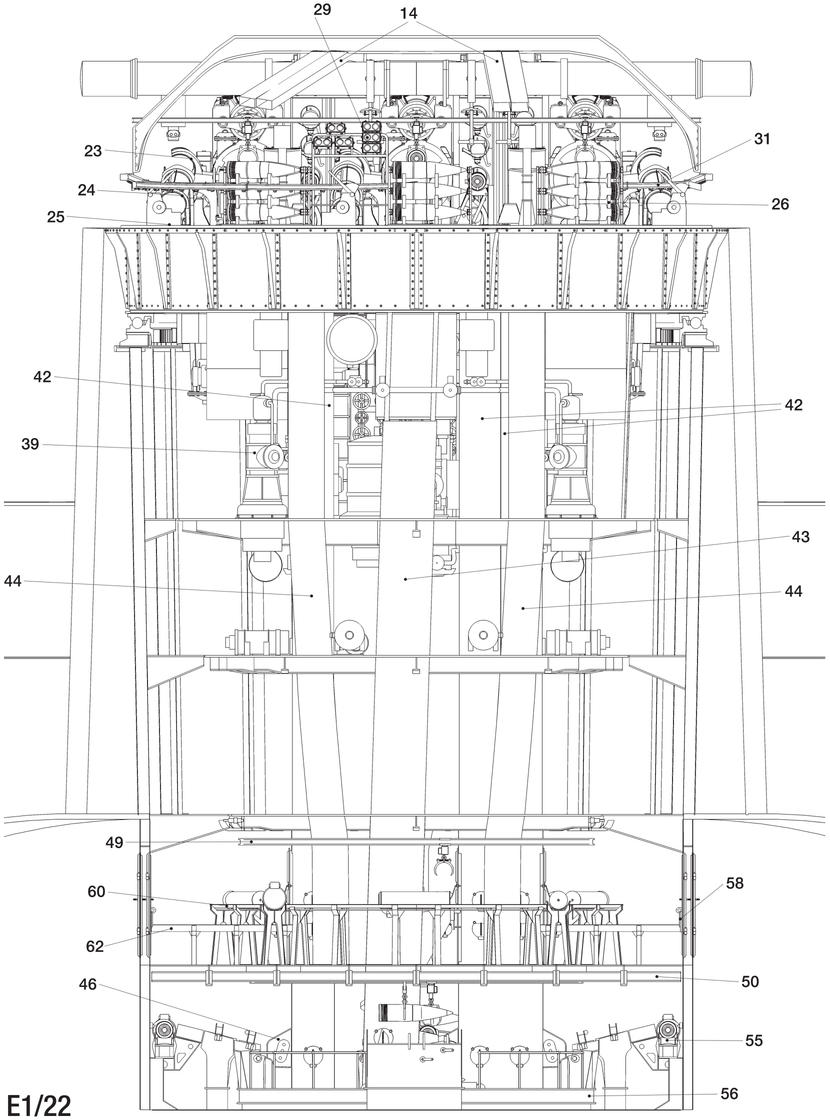

E1/22

E1/24 TURRET B – GUNHOUSE – PLAN

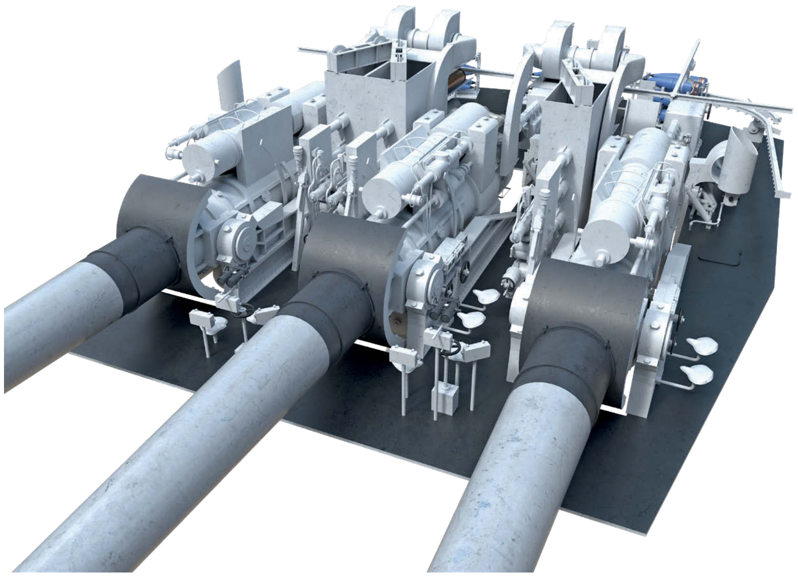

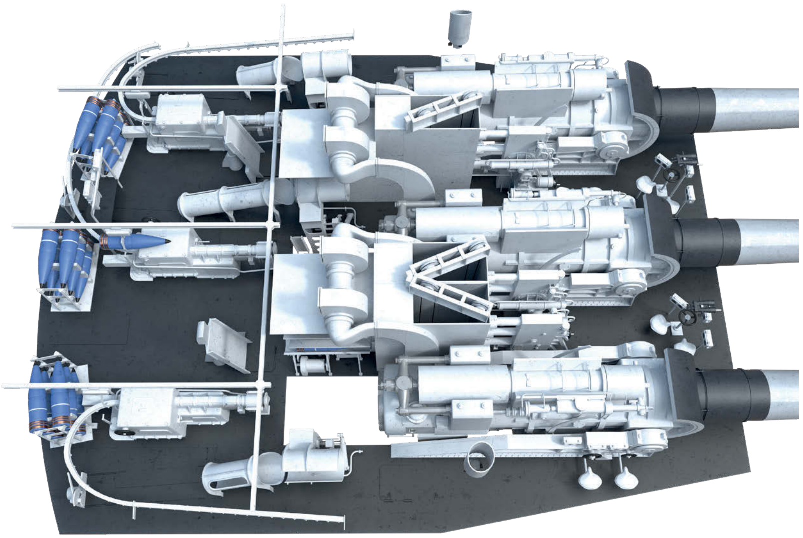

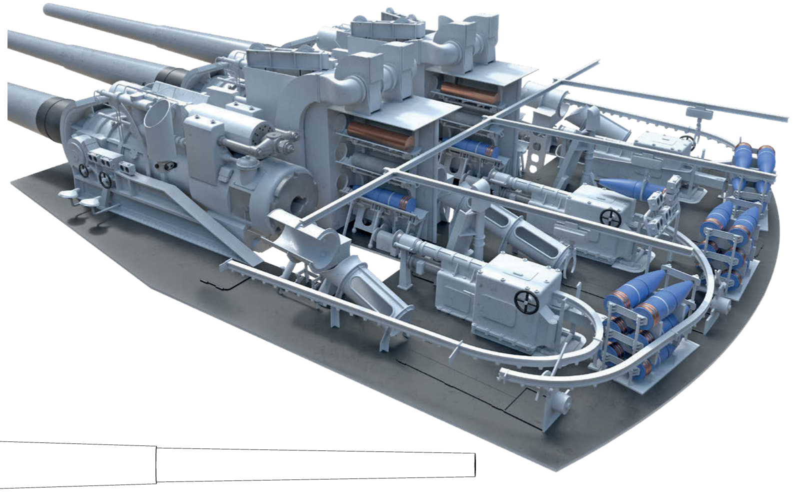

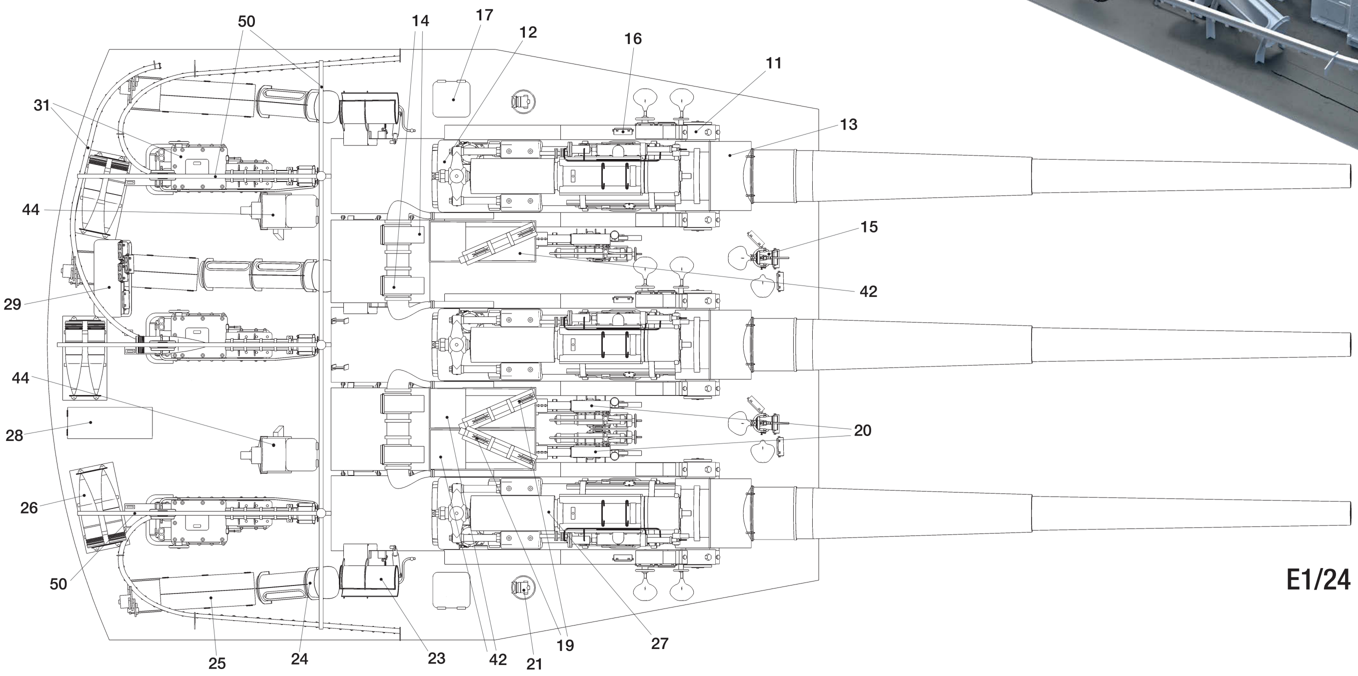

E1/24

28CM SK C/34 GUNS IN THE DRH L C/34 TRIPLE TURRET – SECTIONS (1/125 SCALE)

E1/25 TURRET B – TRAIN AND ELEVATION MECHANISMS LEVEL – BOTTOM VIEW

E1/26 TURRET B – MACHINERY LEVEL – PLAN

E1/27 TURRET B – INTERMEDIATE LEVEL 1 – PLAN

E1/28 TURRET B – PROPELLANT HANDLING LEVEL WITH FORE AND AFT MAGAZINES – PLAN

E1/29 TURRET B – PROJECTILE HANDLING LEVEL WITH FORE AND AFT MAGAZINES – PLAN

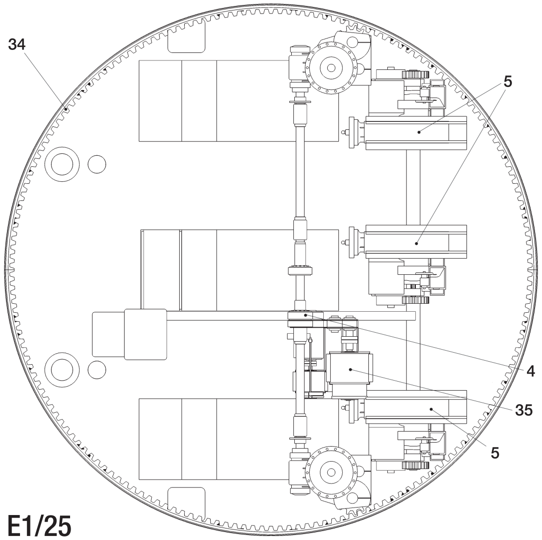

E1/25

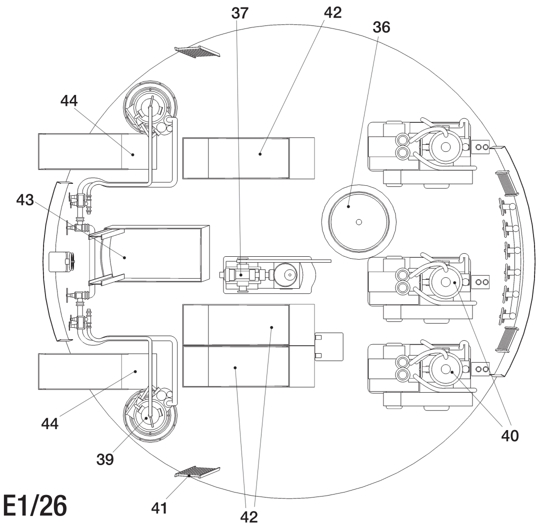

E1/26

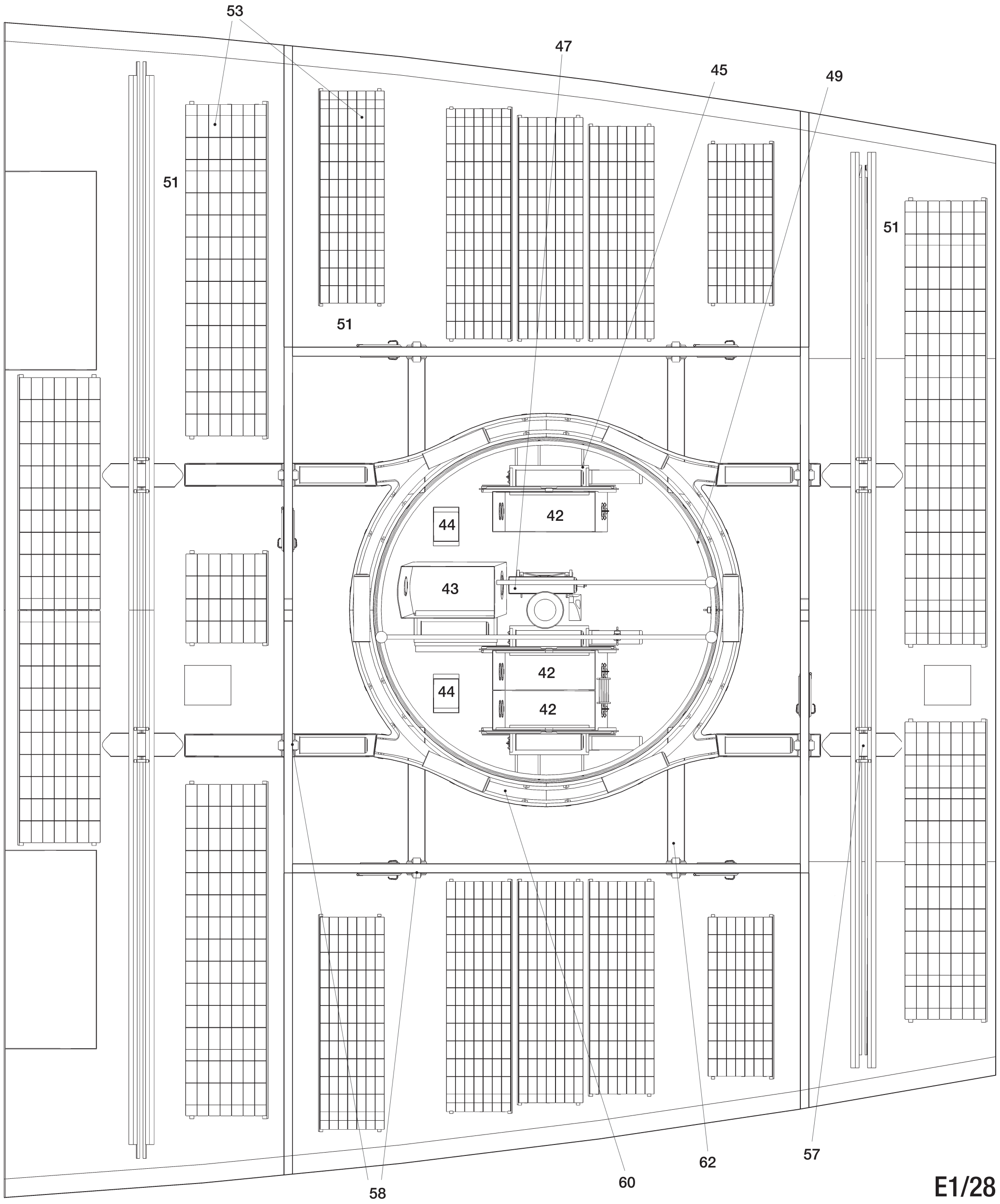

E1/28

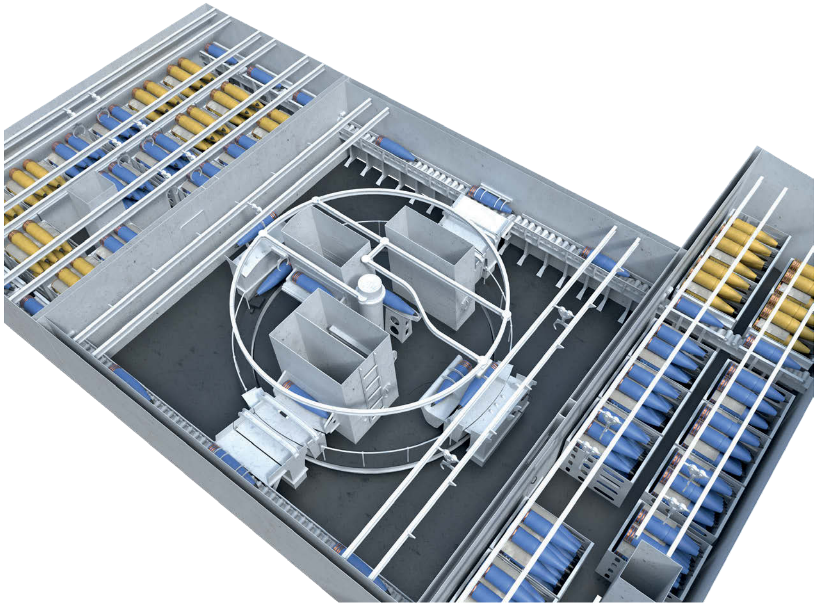

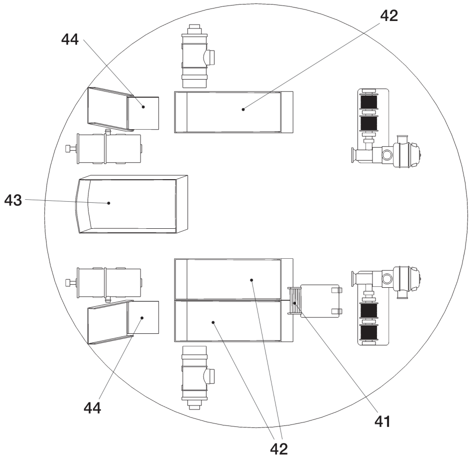

E1/27

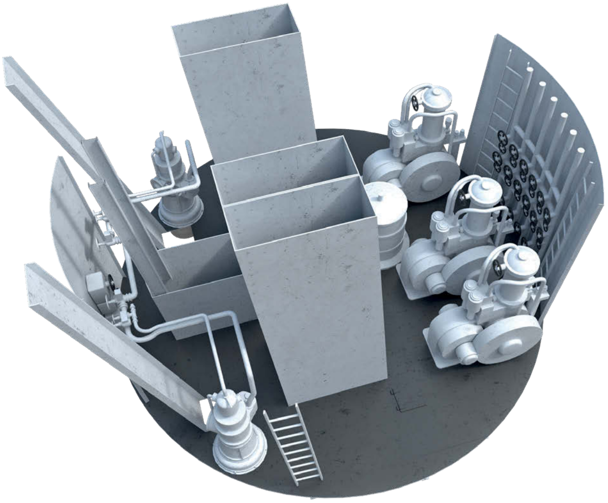

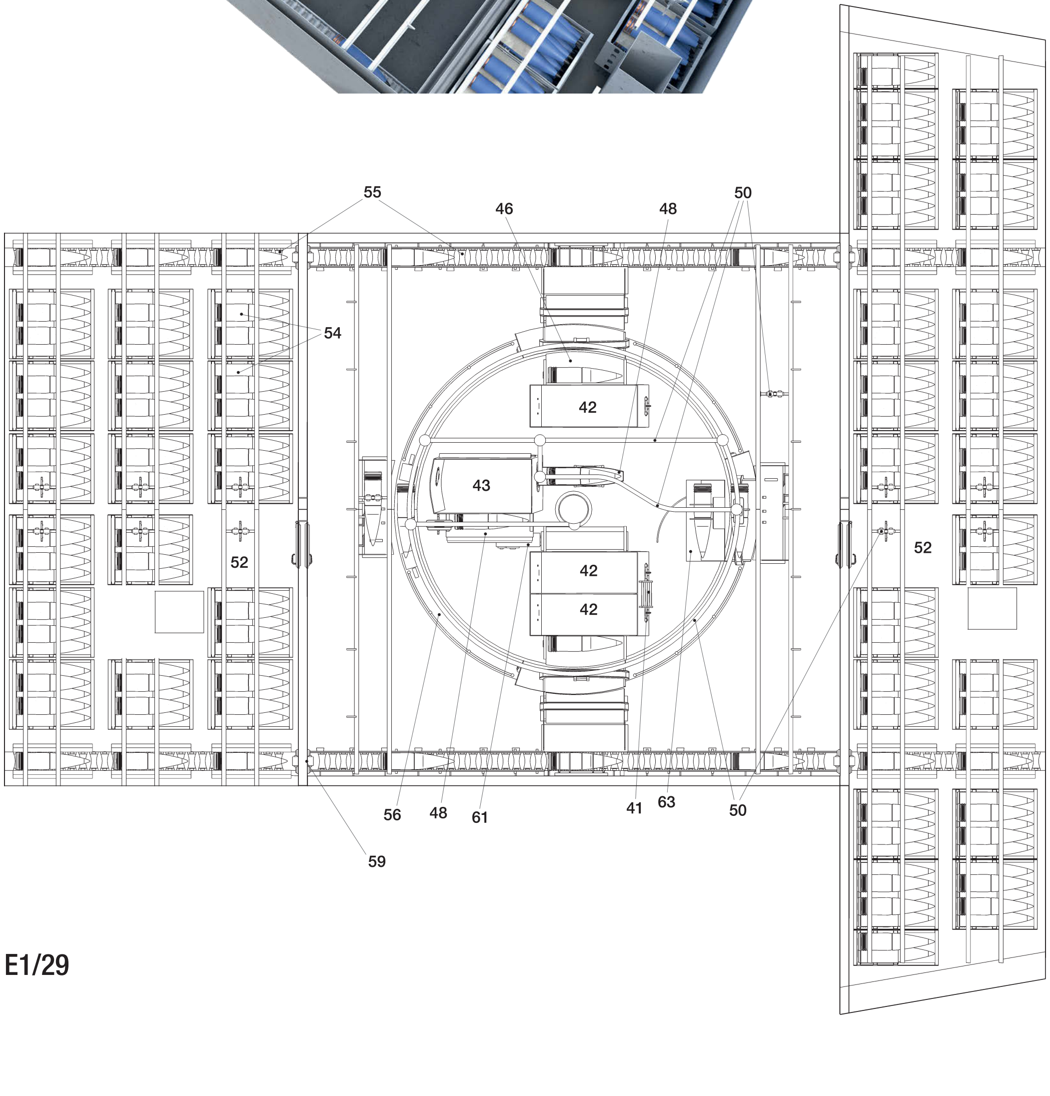

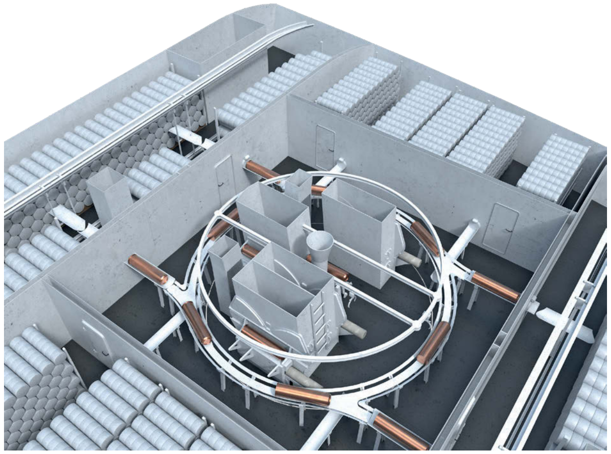

E1/29

28CM SK C/34 GUN, RIGHT-HAND VARIANT (1/125 SCALE)

E1/30 RIGHT PROFILE
E1/31 LEFT PROFILE (FRAGMENT)
E1/32 FRONT VIEW
E1/33 BACK VIEW
E1/34 PLAN (FRAGMENT)

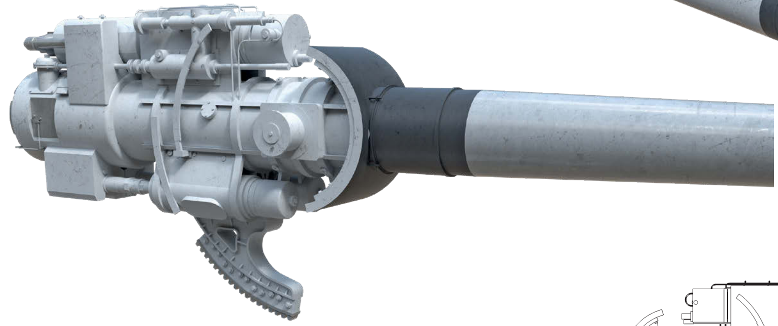

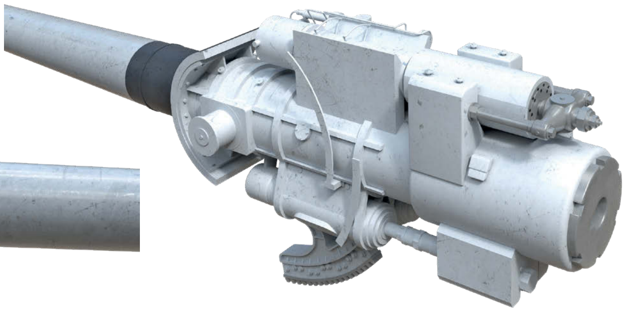

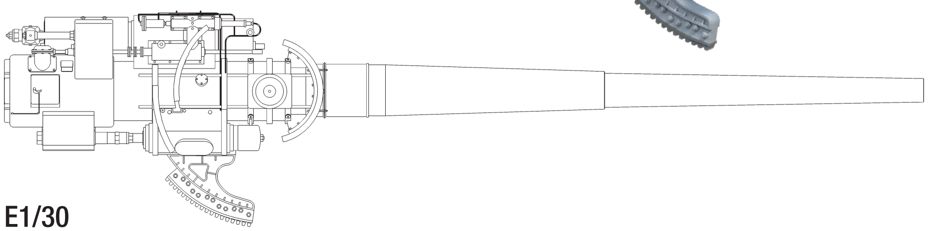

E1/30

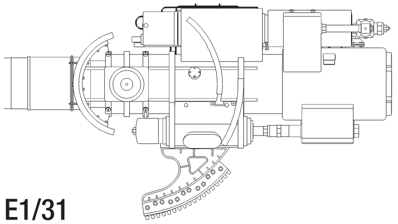

E1/31

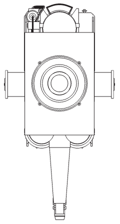

E1/32

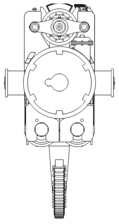

E1/33

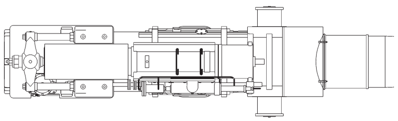

E1/34

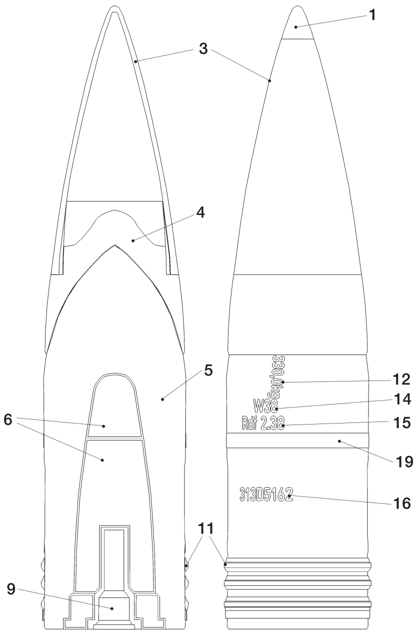

E1/35

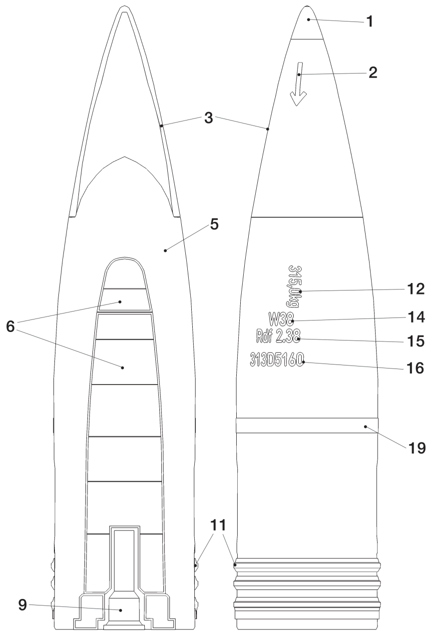

E1/36

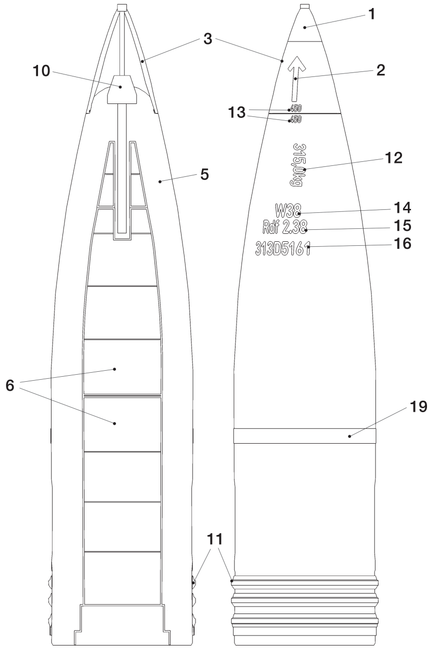

E1/37

28CM PROJECTILES – SECTIONS AND PROFILE VIEWS (1/15 SCALE)

E1/35 28CM PZGR. L/4,4 (M.HB); PZGR. = *PANZERSPRENGGRANATE*, ARMOUR PIERCING PROJECTILE; M.HB = *MIT HAUBE*, CAPPED

E1/36 28CM SPGR. L/4,4 BDZ (M.HB); SPGR. = *SPRENGGRANATE*, HIGH EXPLOSIVE PROJECTILE; BDZ = *BODENZÜNDER*, BASE FUSE; M.HB = *MIT HAUBE*, CAPPED

E1/37 28CM SPGR. L/4,4 KZ (M.HB); SPGR. = *SPRENGGRANATE*, HIGH EXPLOSIVE PROJECTILE; KZ = KOPFZÜNDER, NOSE FUSE; M.HB = *MIT HAUBE*, CAPPED

E1/38 28CM *HÜLSENKARTUSCHE* C/34; PROPELLANT CARTRIDGE (MAIN CHARGE)

E1/39 28CM *VORKARTUSCHE* C/34; PROPELLANT BAG (FORE CHARGE)

E1/35–39 38CM PROJECTILES

1 Black painted tip – indication of charged projectile
2 Black painted arrow indicating location of fuse
3 Ballistic cap
4 Armour piercing cap
5 Projectile body
6 Bursting charge
7 Priming charge
8 Propellant charge – powder tubes in silk bag
9 Base fuse
10 Nose fuse
11 Rotating bands
12 Projectile weight
13 Projectile and cap number
14 Projectile charging place and date (W=Wilhelmshaven)
15 Bursting charge supply origin and date (Rdf=Reinsdorf)
16 Bursting charge number
17 Cover
18 Cartridge case
19 White painted stripe – indication of projectile's center of gravity
20 Cotton bag

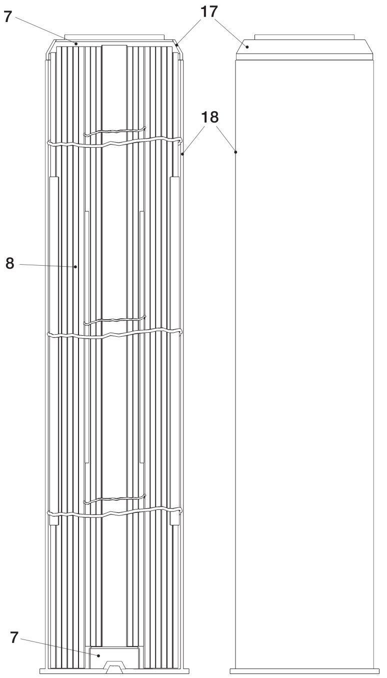

E1/38

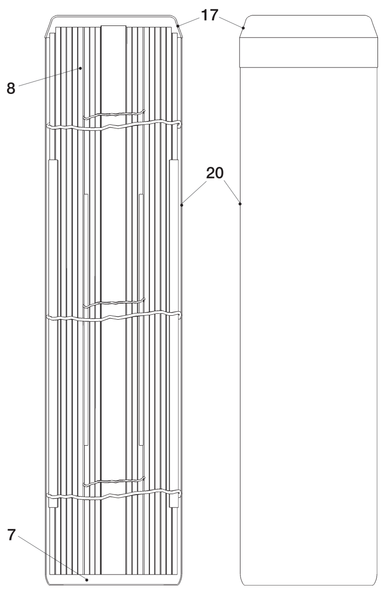

E1/39

15CM SK C/28 GUN IN THE MPL/28 SINGLE MOUNT (1/75 SCALE)

E2/1 RIGHT PROFILE
E2/2 LEFT PROFILE
E2/3 FRONT VIEW
E2/4 BACK VIEW

E2/1–11 15CM SINGLE MOUNT

1 Mount pedestal
2 Mount shield
3 Sight
4 Sight hinged shields
5 Elevation arc
6 Breech operating lever
7 Breech housing
8 Barrel
9 Barrel at maximum elevation of +35°
10 Muzzle plug
11 Removable blast bag (used from mid-1939)
12 Curved shield plate
13 Additional front armour plate

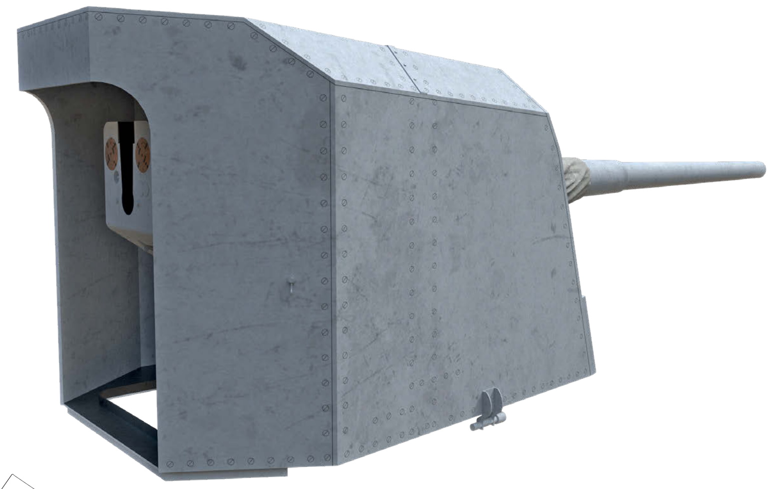

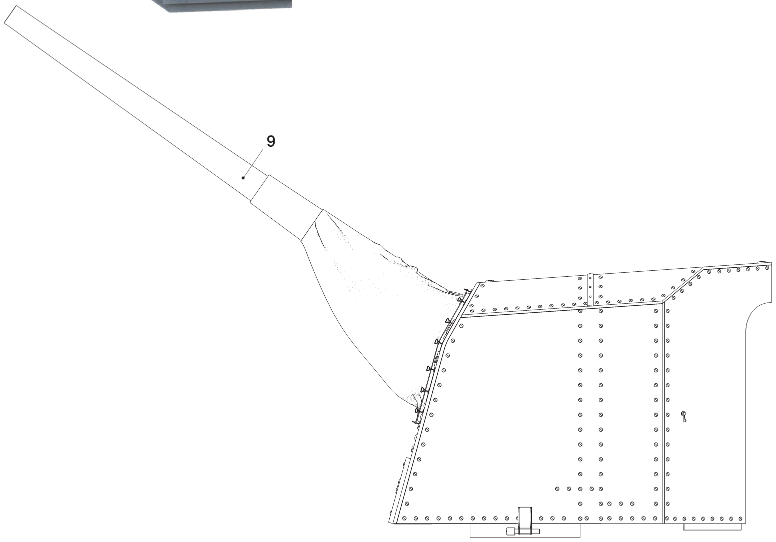

E2/2

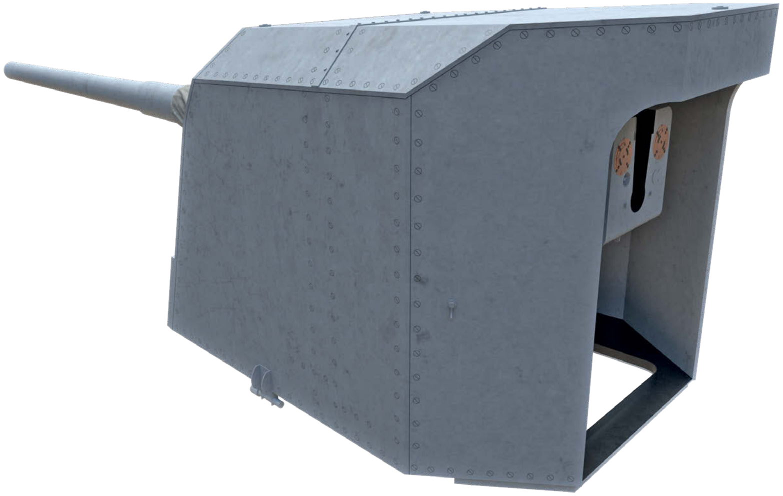

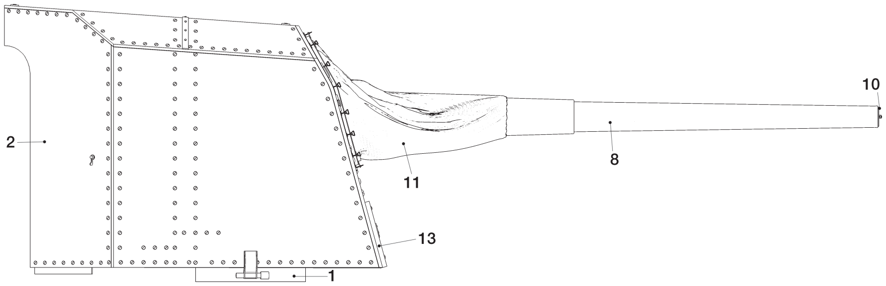

E2/1

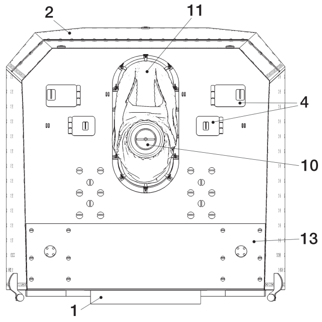

E2/3

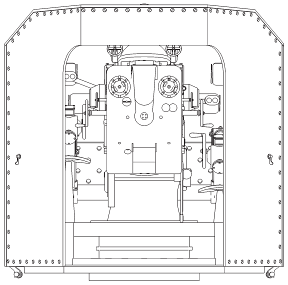

E2/4

E2/5 PLAN
E2/6 FRONT VIEW – EARLY APPEARANCE
WITHOUT THE BLAST BAG (UNTIL MID-1939)

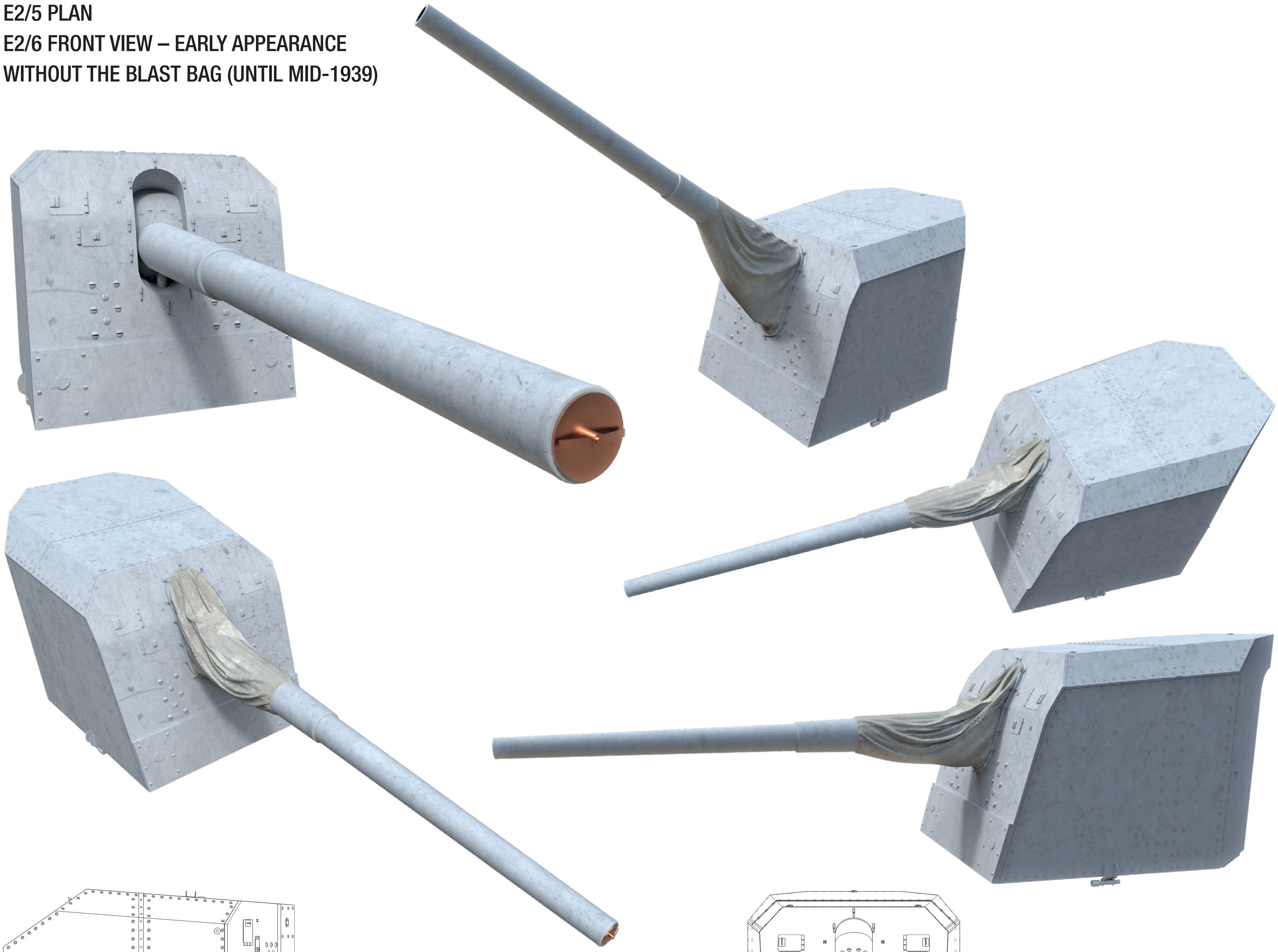

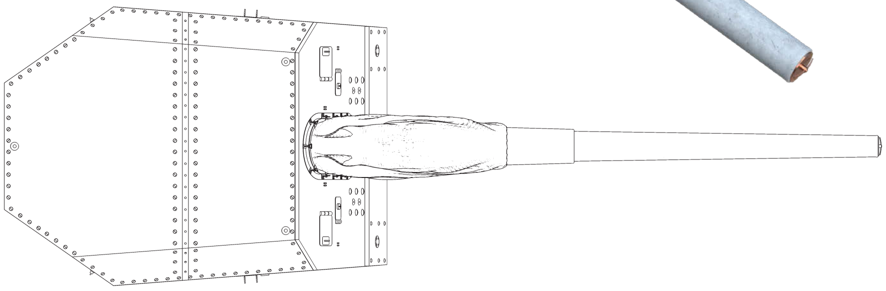

E2/5

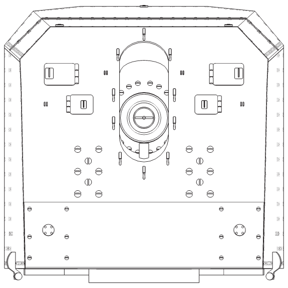

E2/6

15CM SK C/28 GUN IN THE MPL/28 SINGLE MOUNT – INSIDE VIEWS (1/75 SCALE)

E2/7 RIGHT PROFILE (FRAGMENT)
E2/8 LEFT PROFILE (FRAGMENT)
E2/9 FRONT VIEW
E2/10 BACK VIEW
E2/11 PLAN (FRAGMENT)

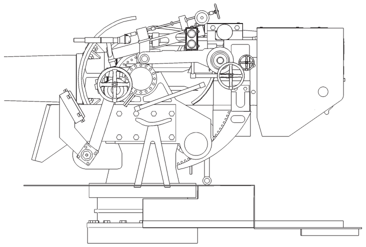

E2/8

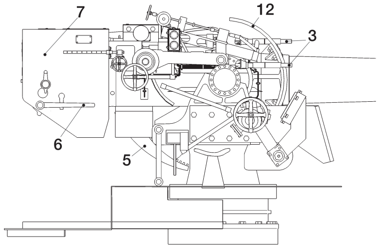

E2/7

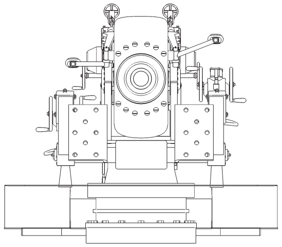

E2/9

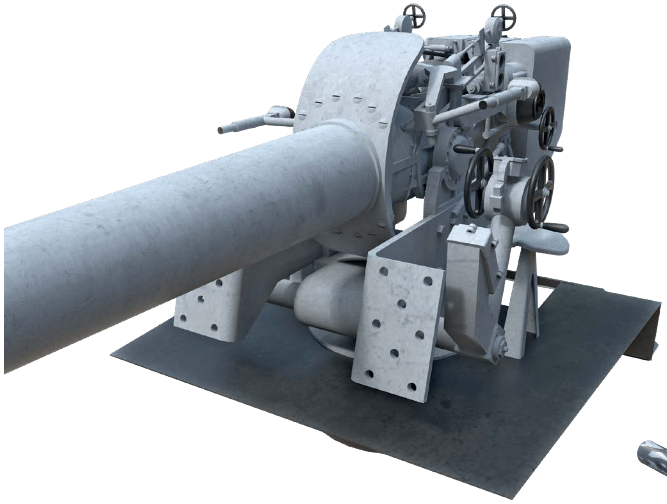

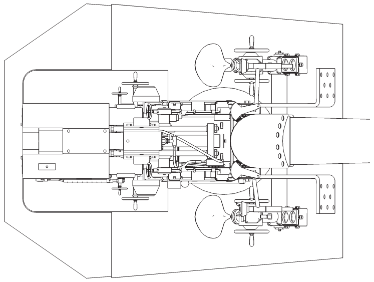

E2/11

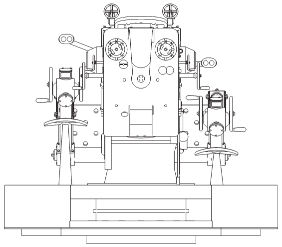

E2/10

February 1942

February 1942

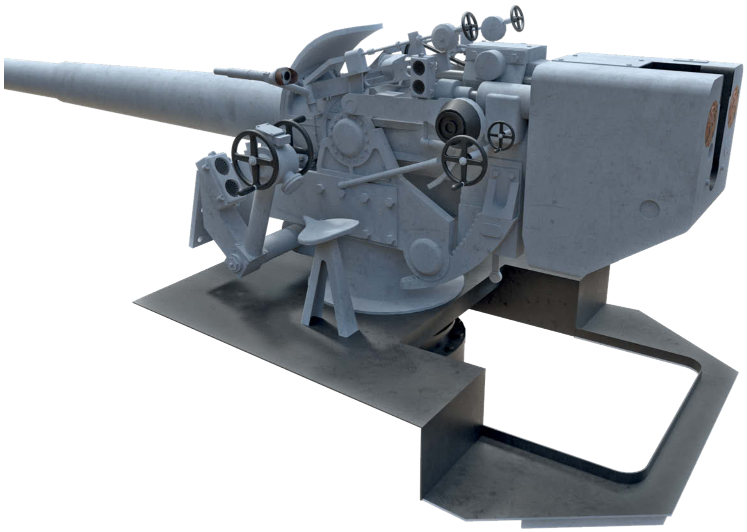

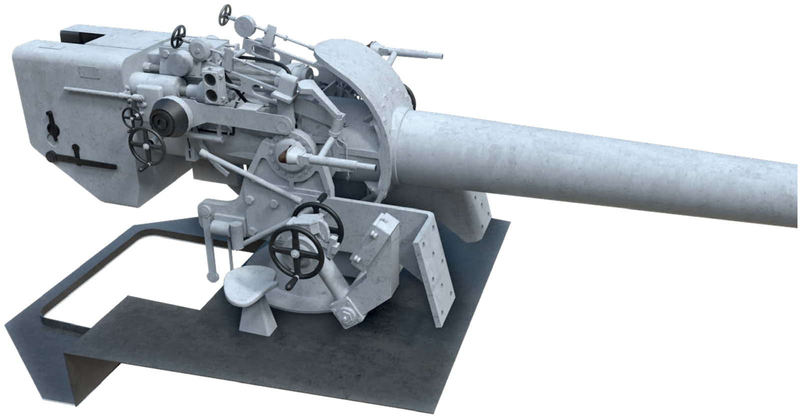

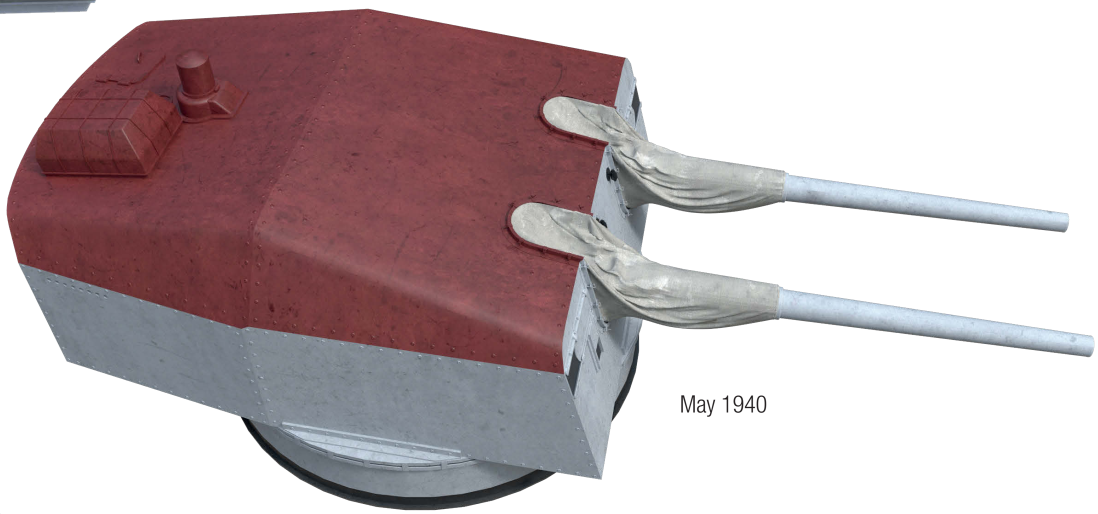

May 1940

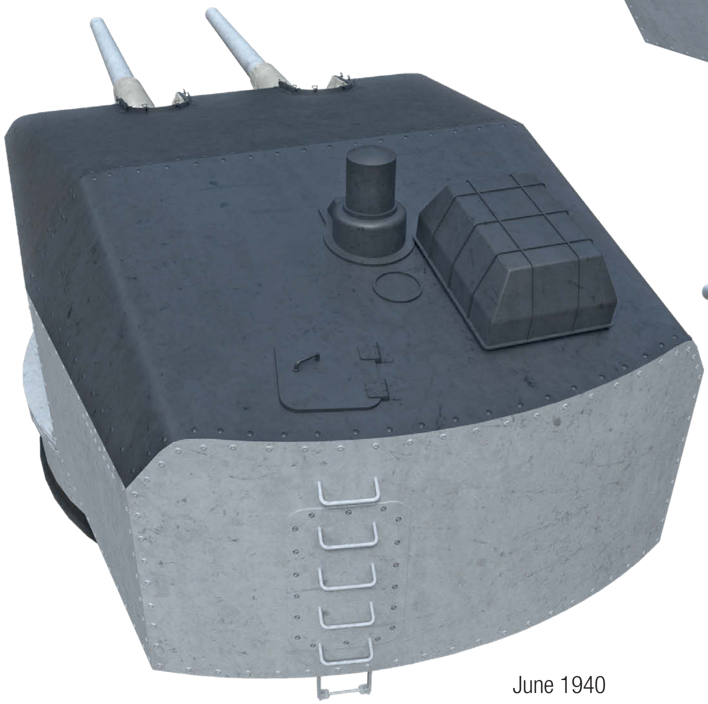

June 1940

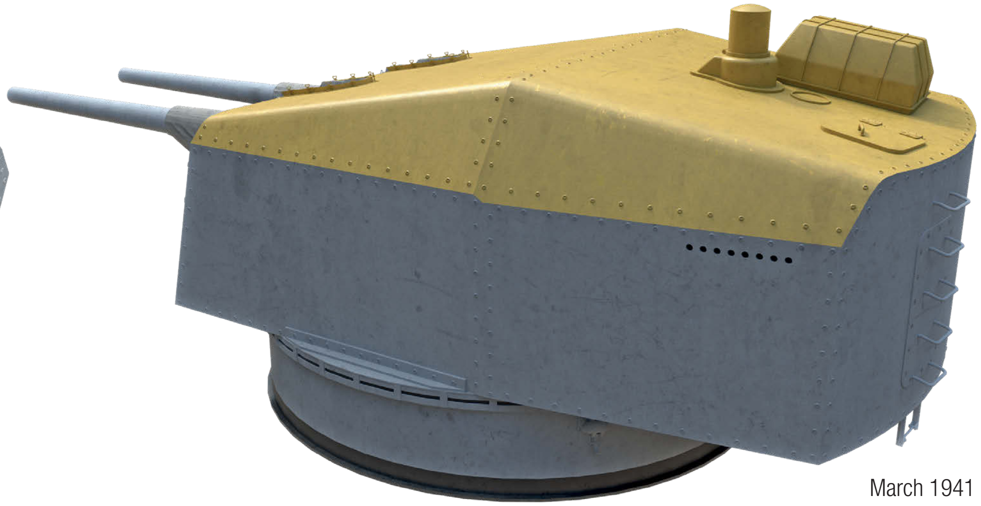

March 1941

15CM SK C/28 GUNS IN THE DOPP L C/34 TWIN TURRET (1/75 SCALE)

E2/12 FORE STARBOARD SIDE TURRET – RIGHT PROFILE
E2/13 FORE STARBOARD SIDE TURRET – FRONT VIEW
E2/14 FORE STARBOARD SIDE TURRET – BACK VIEW
E2/15 FORE STARBOARD SIDE TURRET – PLAN
E2/16 AFT STARBOARD SIDE TURRET – LEFT PROFILE
E2/17 AFT STARBOARD SIDE TURRET – FRONT VIEW
E2/18 FORE TURRET, EARLY APPEARANCE WITHOUT THE BLAST BAGS (UNTIL MID-1939) – FRONT VIEW (FRAGMENT)

E2/12–24 15CM TWIN TURRET

1 Barbette
2 Train locking mechanism
3 Empty propellant casing ejection chute
4 Goose vents (aft starboard side turret only)
5 Smoke outlet holes
6 Step iron
7 Loudspeaker (aft turrets only)
8 Barrel
9 Barrel at maximum elevation of +40°
10 Muzzle plug
11 Removable blast bag (used from mid-1939)
12 Sight under sliding shield
13 Inflatable raft container (removed from all turrets in January 1942)
14 Periscope's protective cover
15 C/6 Periscope
16 Access hatch
17 Sealed opening in rear plate
18 2cm *Vierling* platform (added on fore turret roofs in January 1942)
19 2cm *Vierling* platform (modified form from mid-1942)
20 Ladder
21 2cm ammunition locker
22 2cm gun tube

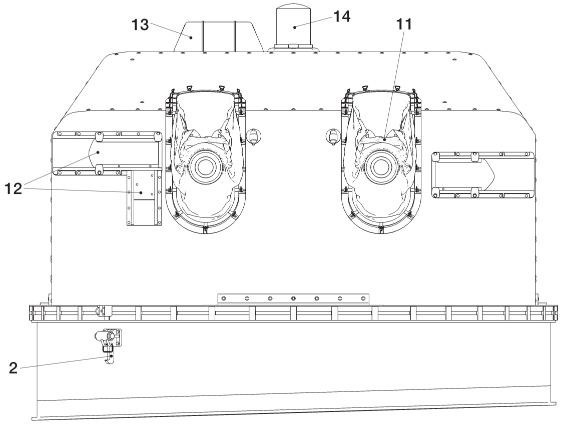

E2/13

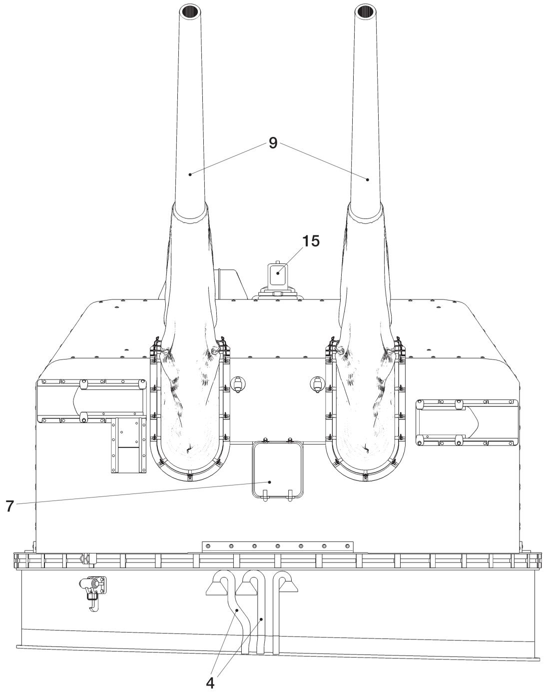

E2/17

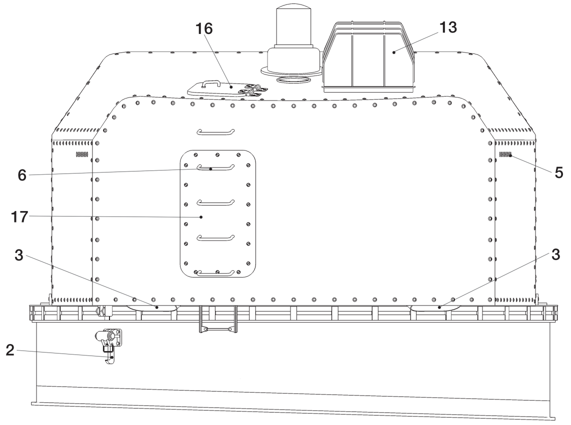

E2/14

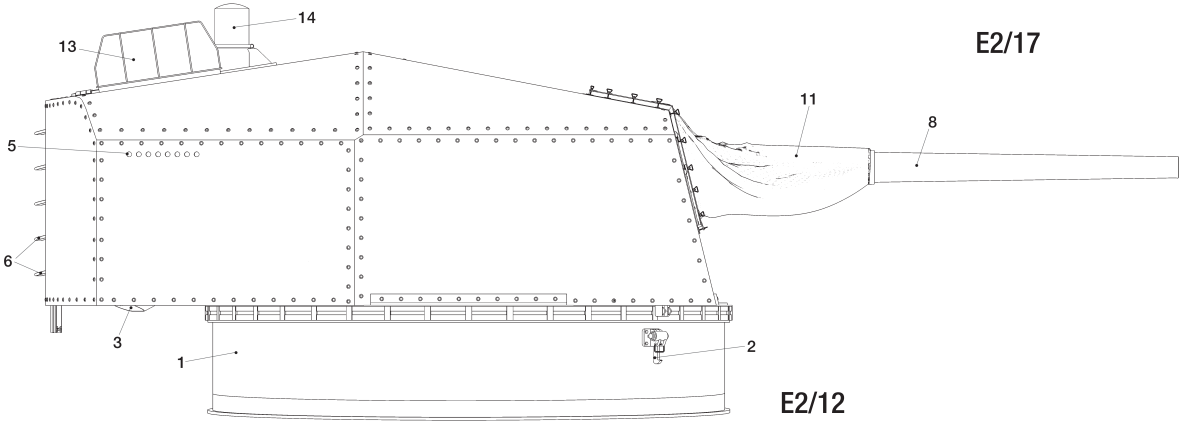

E2/12

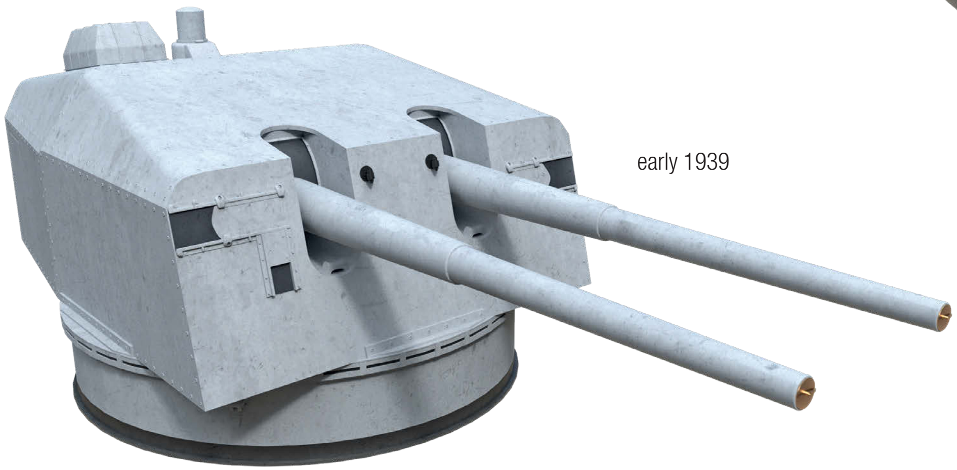

early 1939

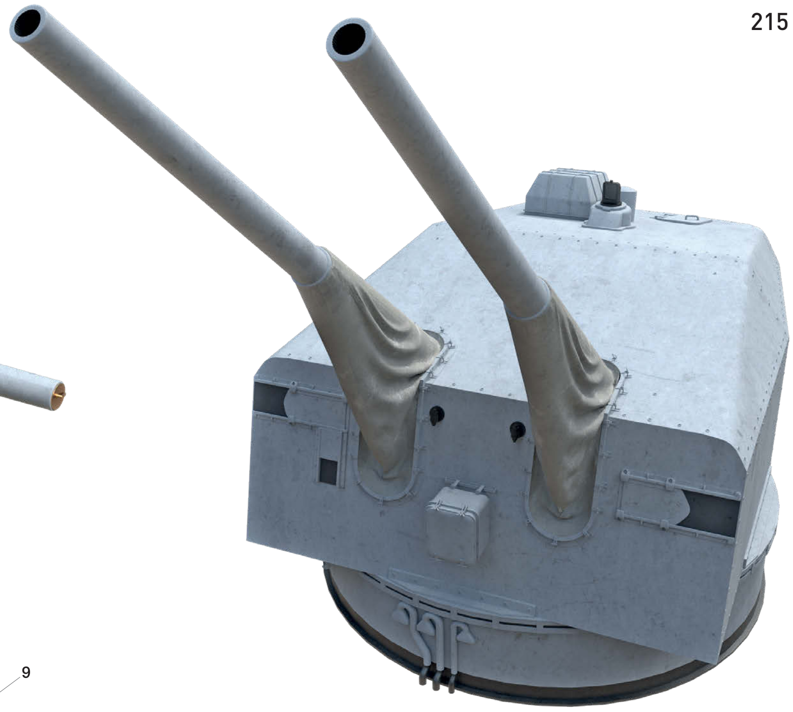

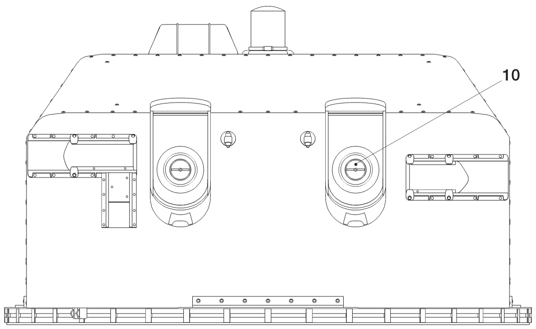

E2/18

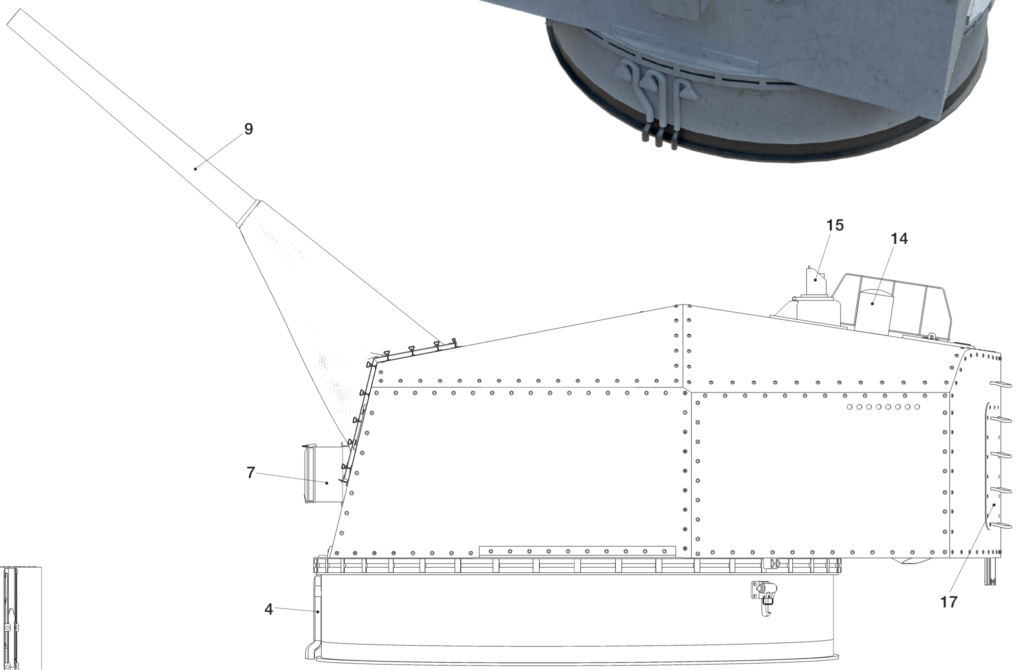

E2/16

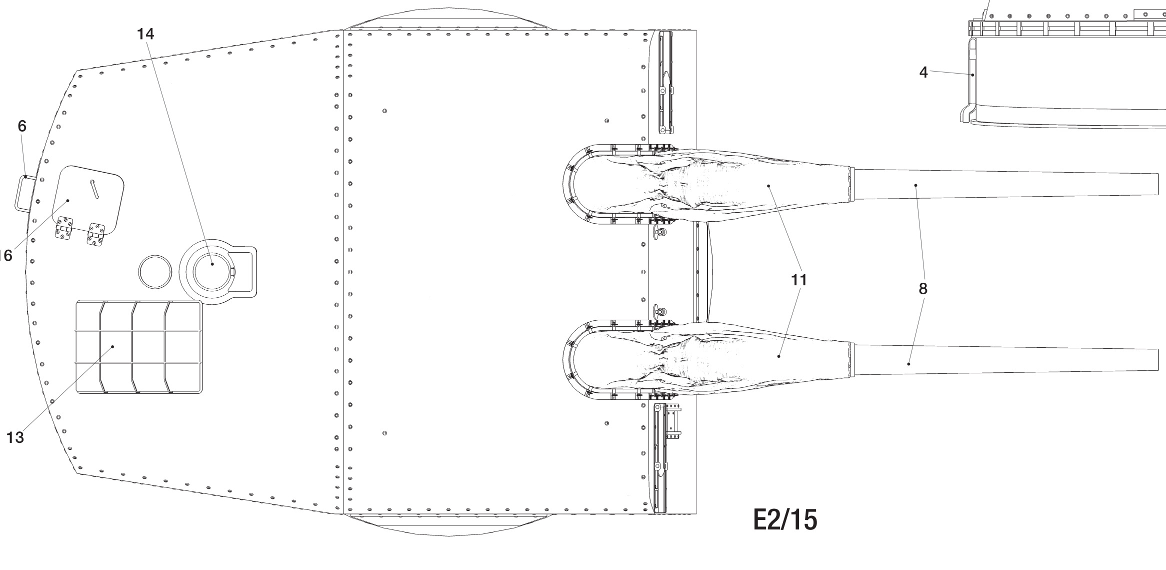

E2/15

15CM SK C/28 GUNS IN THE DOPP L C/34 TWIN TURRET (1/75 SCALE)

E2/19 FORE TURRET AFTER JANUARY 1942 – RIGHT PROFILE (FRAGMENT)

E2/20 FORE TURRET AFTER JANUARY 1942 – FRONT VIEW (FRAGMENT)

E2/21 FORE TURRET AFTER JANUARY 1942 – PLAN

February 1942

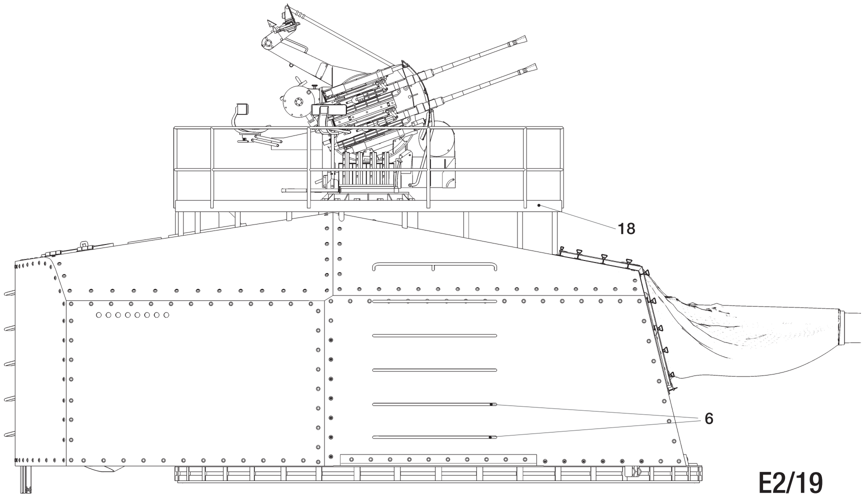

E2/19

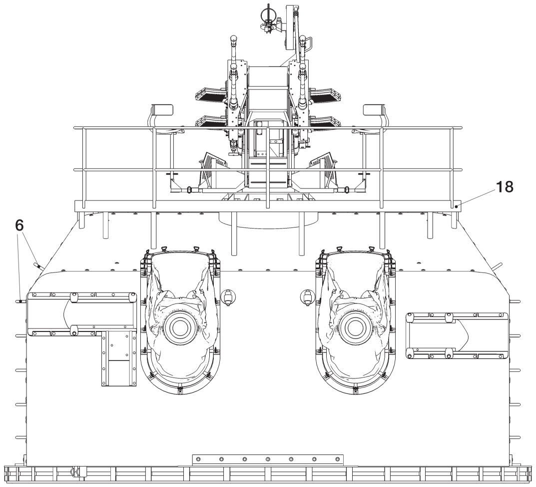

E2/20

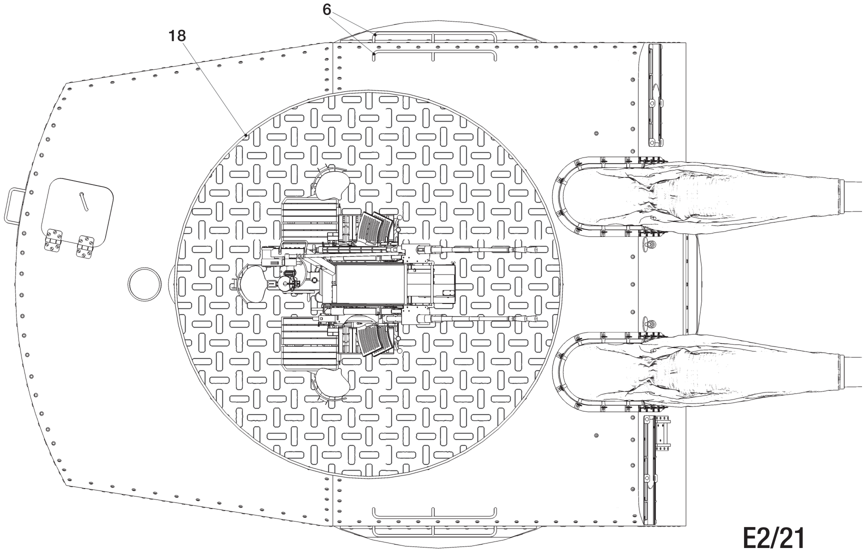

E2/21

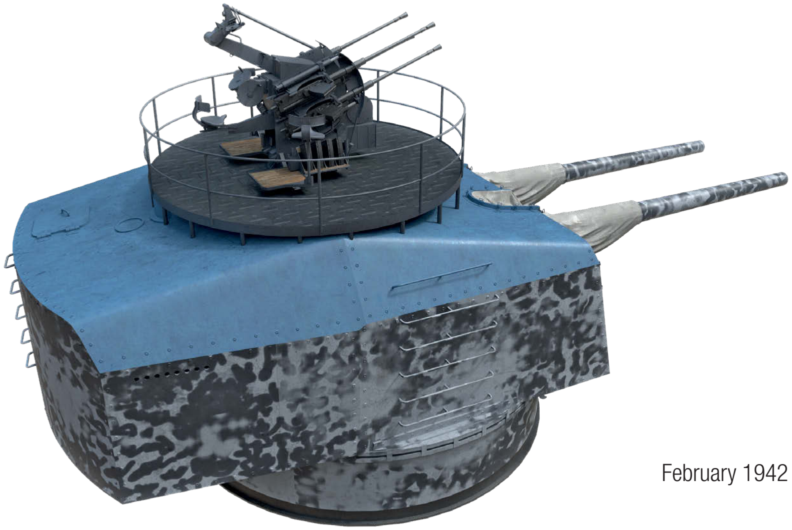

February 1942

E2/22 FORE TURRET AFTER MID-1942 – RIGHT PROFILE (FRAGMENT)
E2/23 FORE TURRET AFTER MID-1942 – FRONT VIEW (FRAGMENT)
E2/24 FORE TURRET AFTER MID-1942 – PLAN

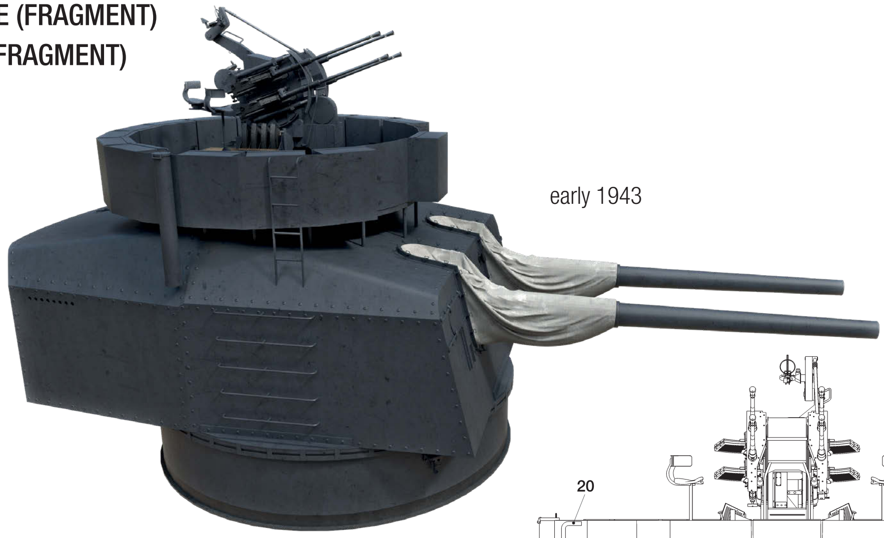

early 1943

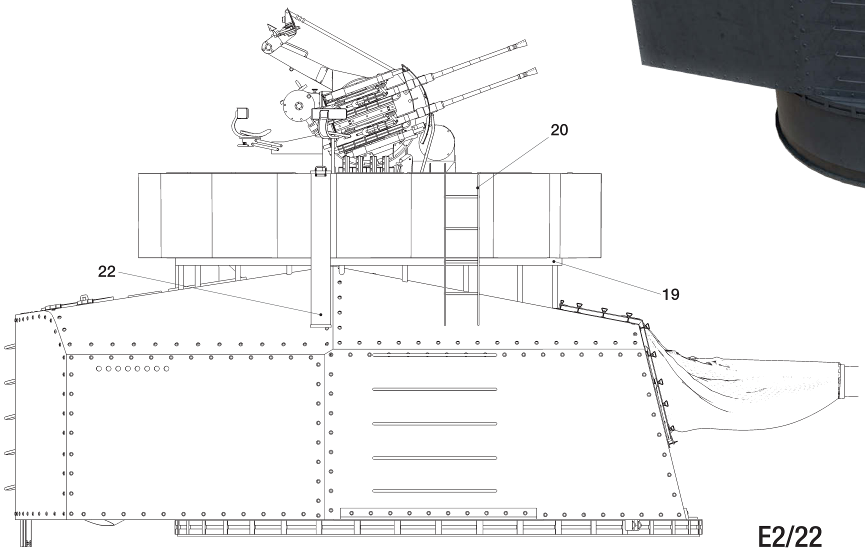

E2/22

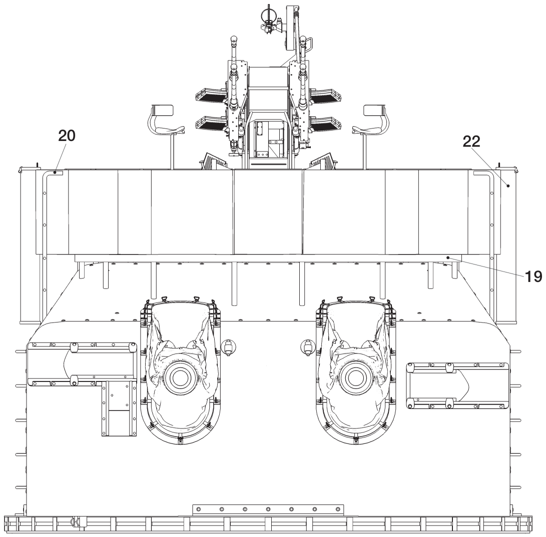

E2/23

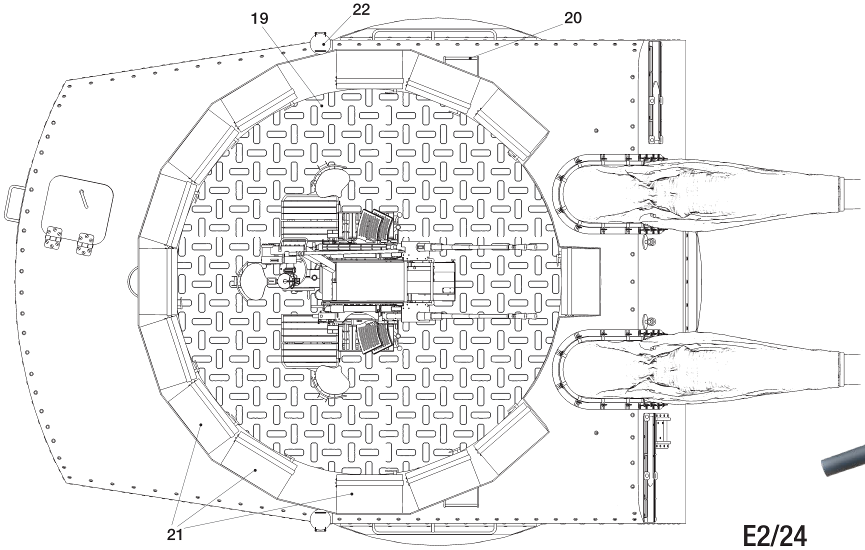

E2/24

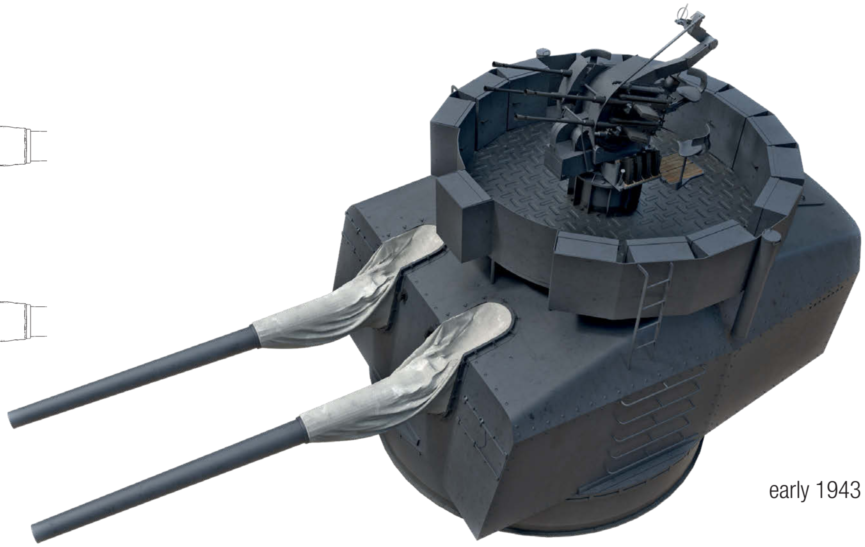

early 1943

15CM SK C/28 GUNS IN THE DOPP L C/34 TWIN TURRET - SECTIONS (1/75 SCALE)

E2/25 LEFT PROFILE

E2/26 RIGHT PROFILE

E2/25–33 15CM TWIN TURRET - SECTIONS

1 Main deck (*Oberdeck*)
2 Battery deck (*Batteriedeck*)
3 Intermediate deck (*Zwischendeck*)
4 Barbette
5 Support cylinder
6 Train mechanism level
7 Machinery level
8 Workshop level
9 Ammunition handling level
10 Elevation arc
11 Gun cradle
12 Gun breech
13 Curved shield plate
14 Smoke exhaust duct
15 Aiming controls
16 Hatch
17 Turret roof support
18 Main ammunition hoist pulleys
19 Auxiliary ammunition hoist pulleys
20 Periscope
21 Ready-to-use ammunition
22 Empty cases ejection point
23 Turret train indicator
24 Turret access hatch
25 Foot step
26 Gun firing panel
27 Auxiliary ammunition hoist drive
28 Ammunition unloading table
29 Train mechanism drive
30 Voice pipe
31 Light
32 Turret stop
33 Roller path
34 Sprocket
35 Train mechanism motor generator
36 Main ammunition hoist emergency use crank
37 Hydraulic pump
38 Main ammunition hoist drive
39 Hydraulic installation tank
40 Hydraulic installation distribution block
41 Winch
42 Main ammunition hoist emergency use handwheel
43 Ladder
44 Main ammunition hoist shaft
45 Auxiliary ammunition hoist shell basket
46 Auxiliary ammunition hoist propellant cartridge basket
47 Auxiliary ammunition hoist baskets guide rail
48 Shell loading point
49 Propellant cartridge loading point

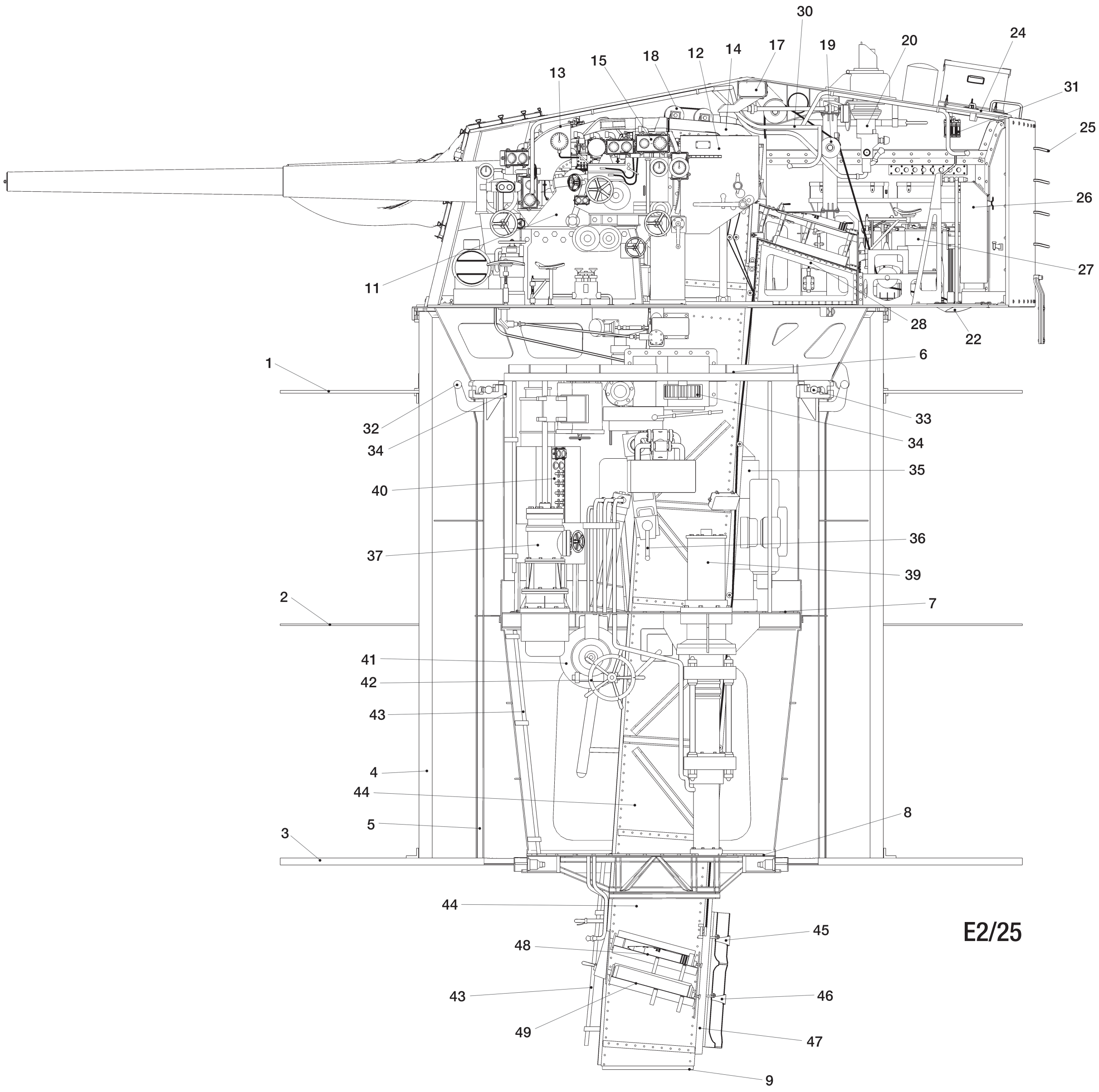

E2/25

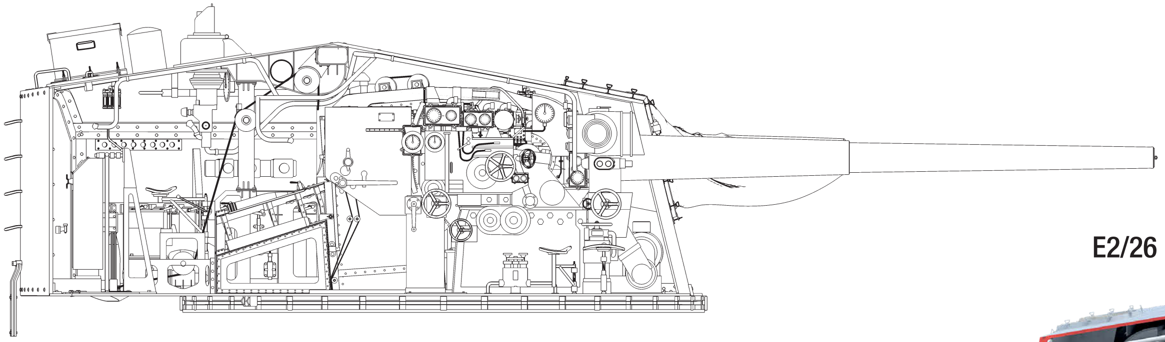

E2/26

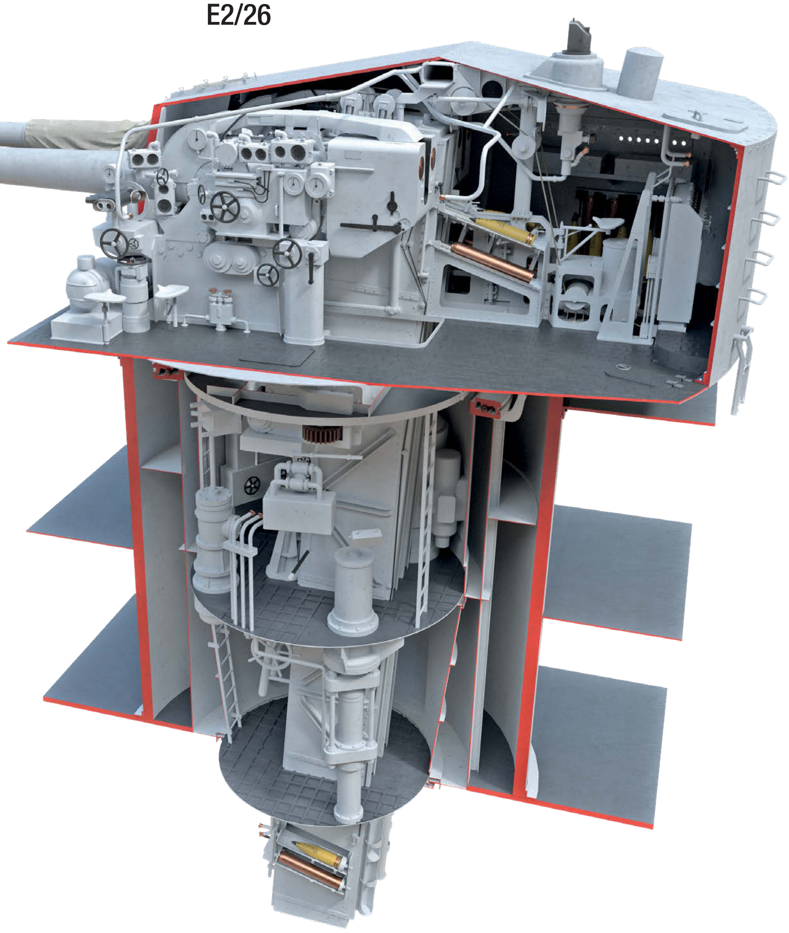

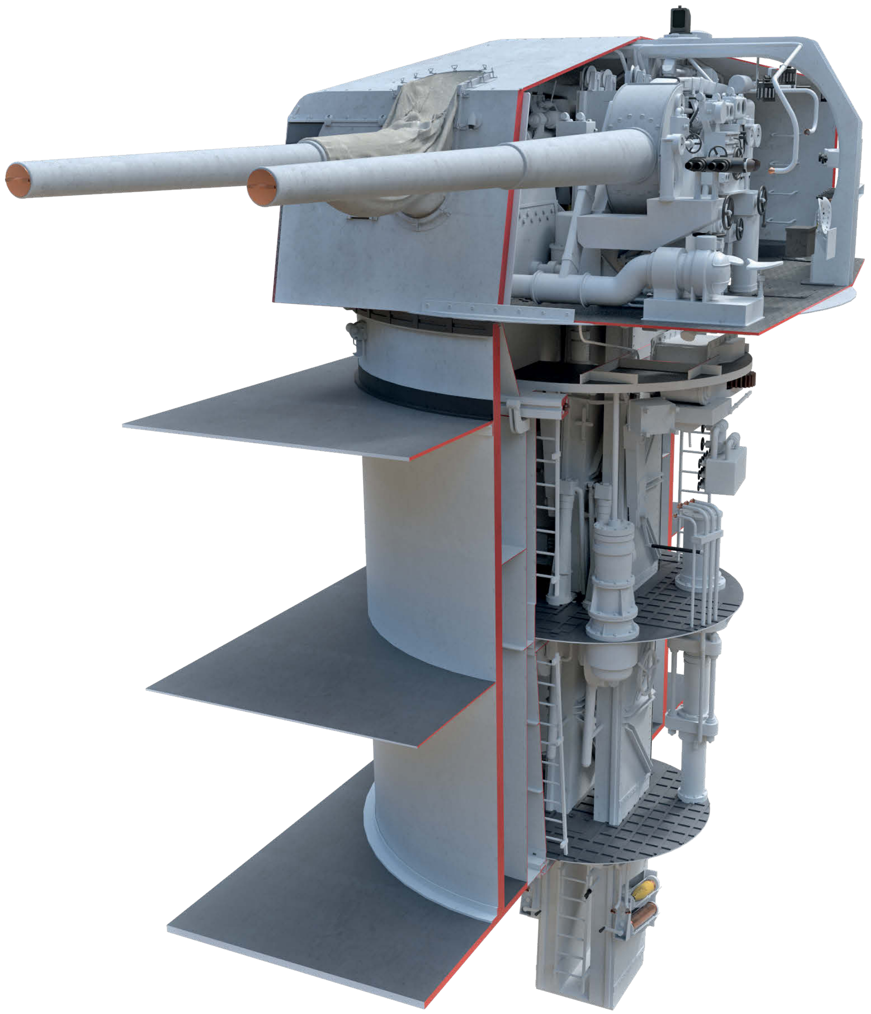

15CM SK C/28 GUNS IN THE DOPP L C/34 TWIN TURRET - SECTIONS (1/75 SCALE)

E2/27 FRONT VIEW

E2/28 BACK VIEW

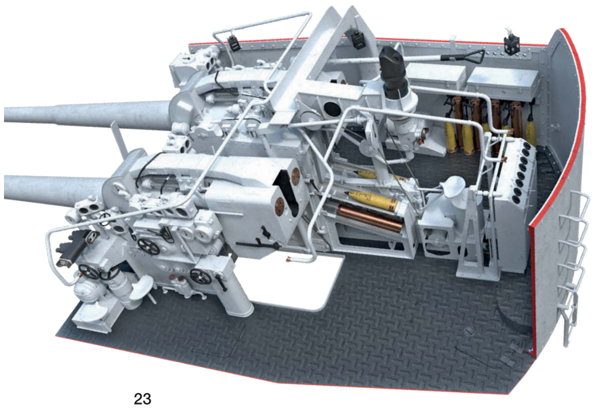

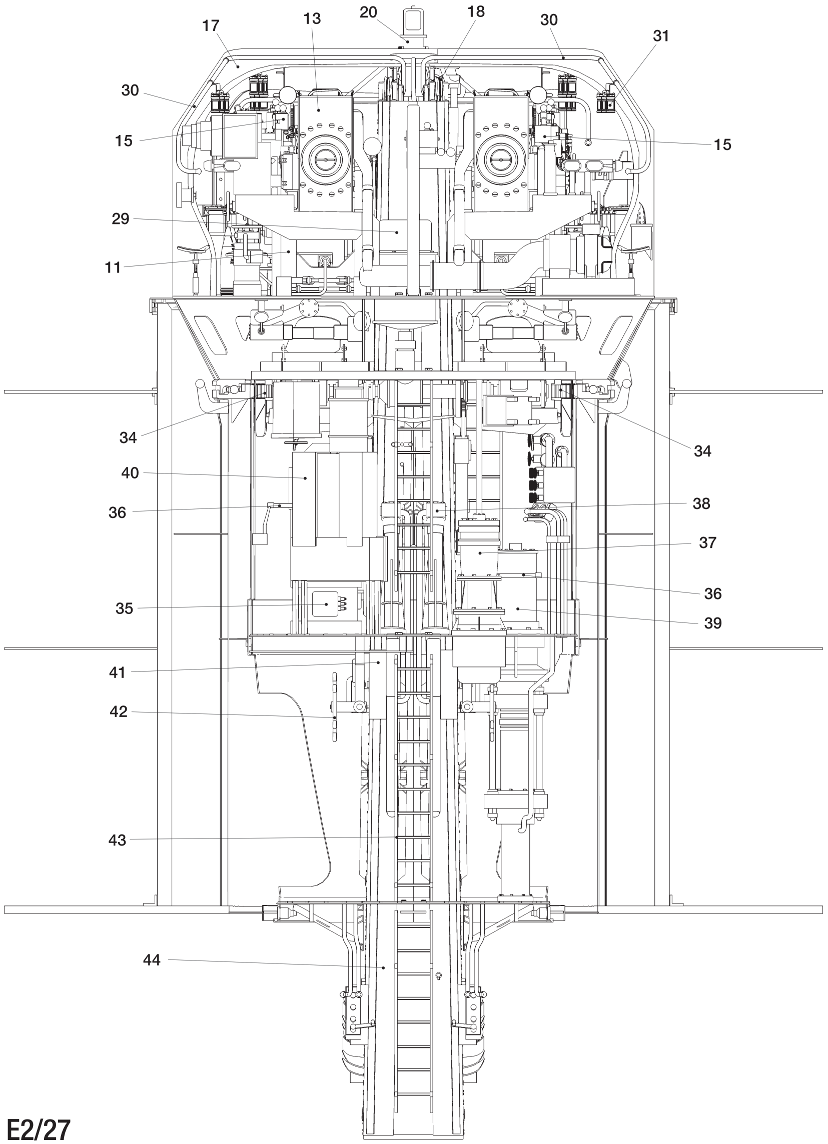

E2/27

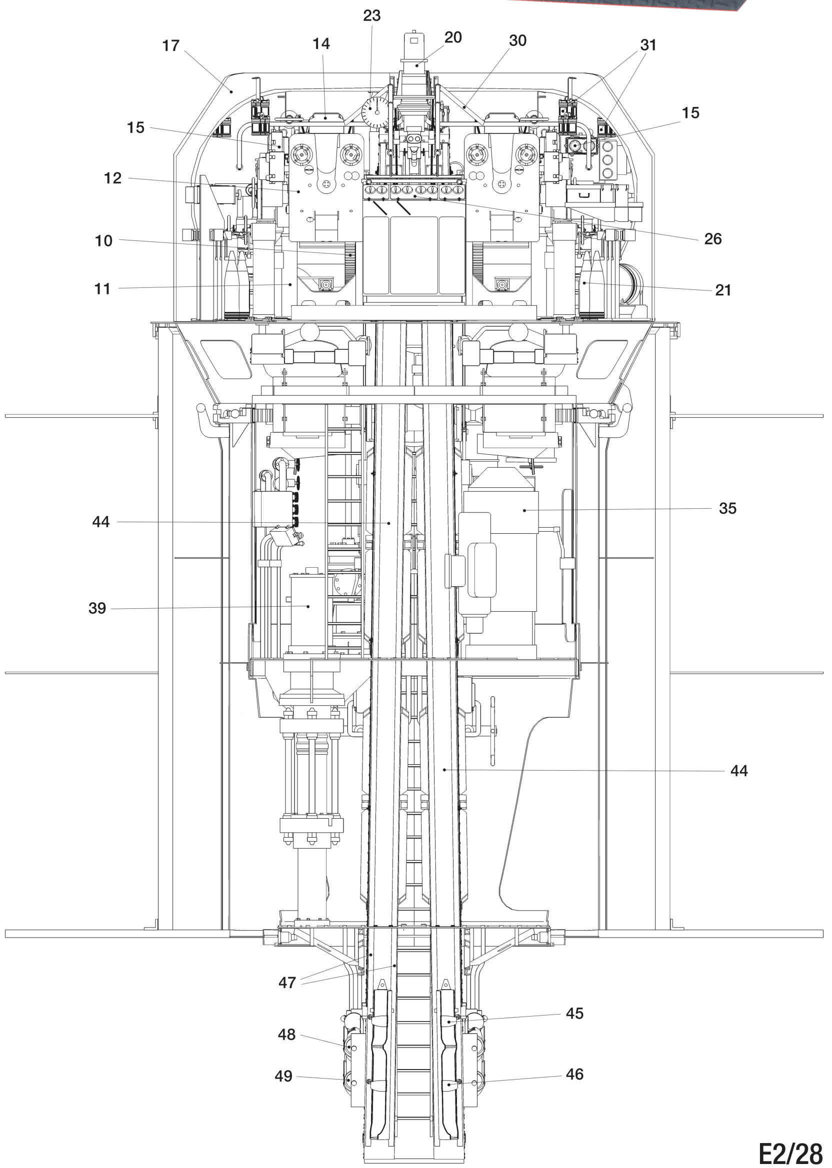

E2/28

E2/29 GUNHOUSE LEVEL – PLAN (FRAGMENT)
E2/30 TRAIN MECHANISM LEVEL – PLAN
E2/31 MACHINERY LEVEL – PLAN
E2/32 WORKSHOP LEVEL – PLAN
E2/33 AMMUNITION HANDLING LEVEL – PLAN

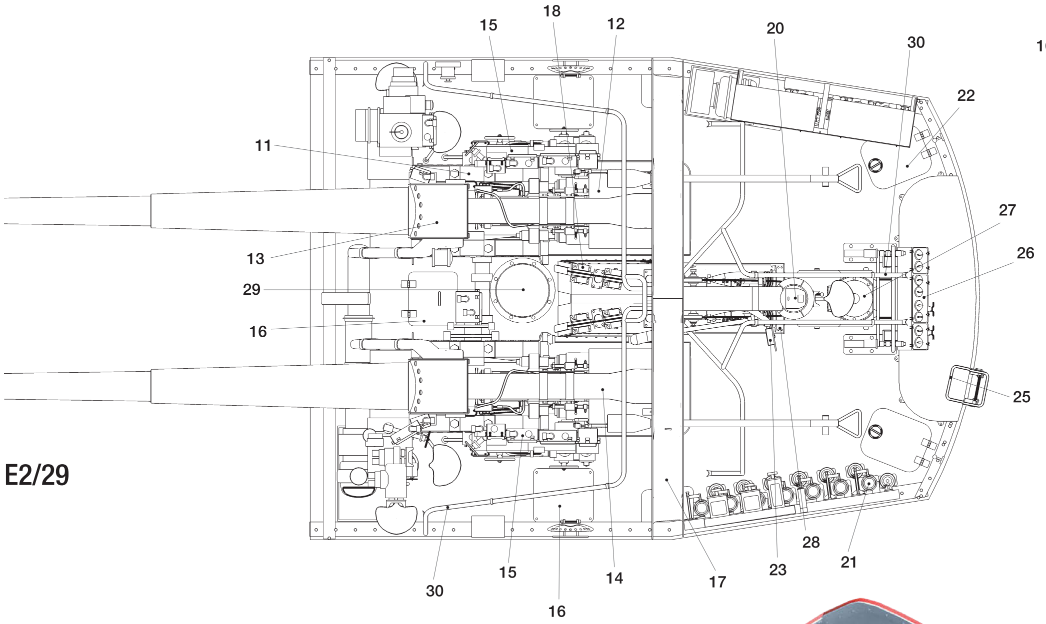

E2/29

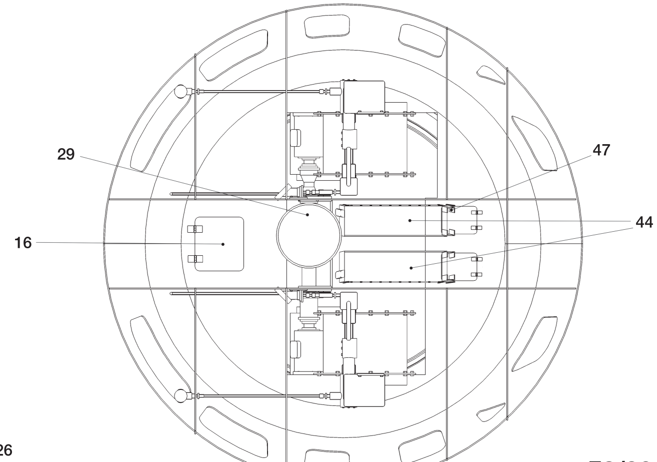

E2/30

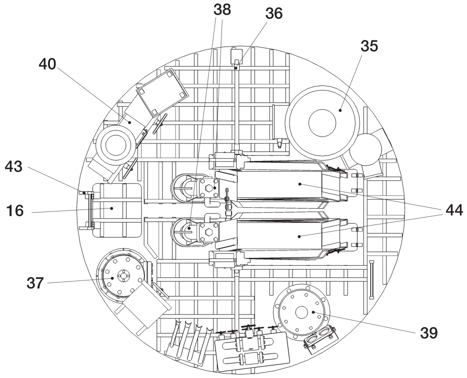

E2/31

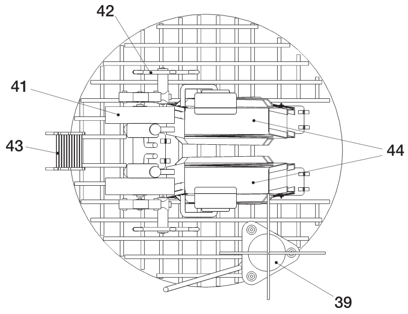

E2/32

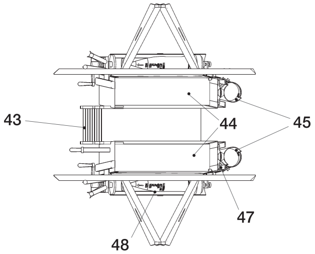

E2/33

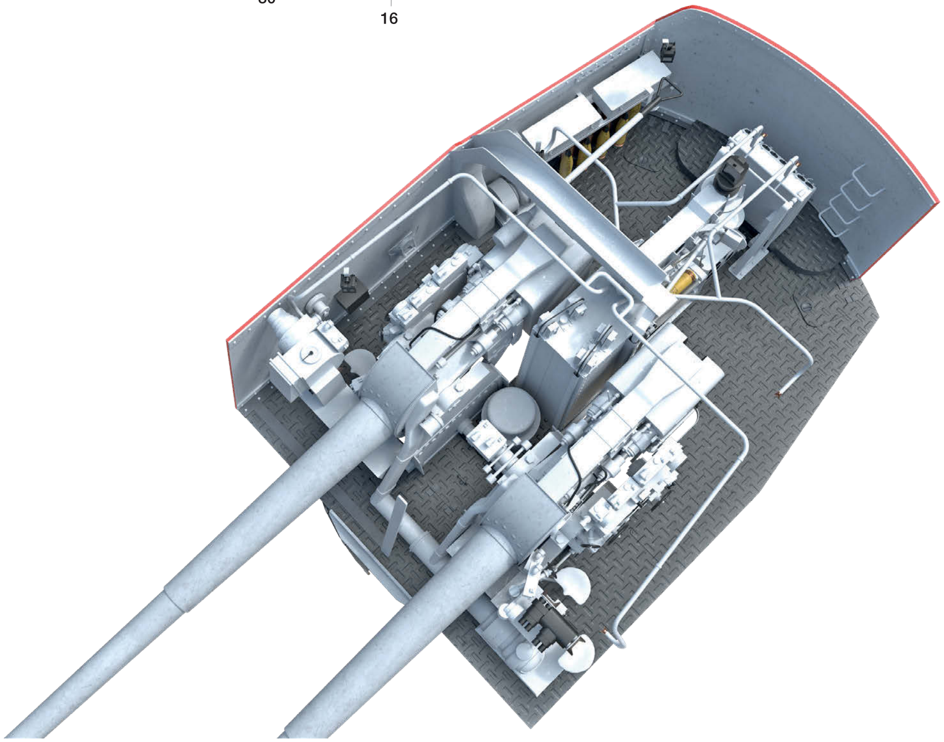

15CM SK C/28 GUN (1/50 SCALE)

E2/34 RIGHT PROFILE
E2/35 LEFT PROFILE
E2/36 FRONT VIEW
E2/37 BACK VIEW
E2/38 PLAN

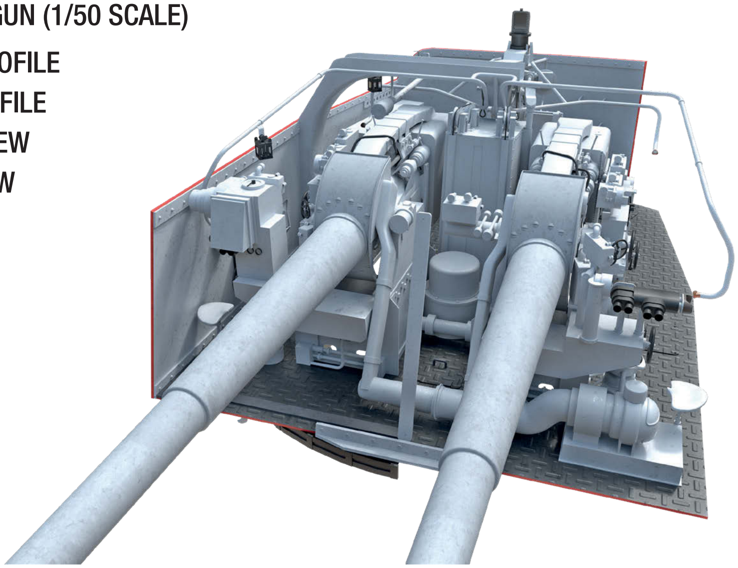

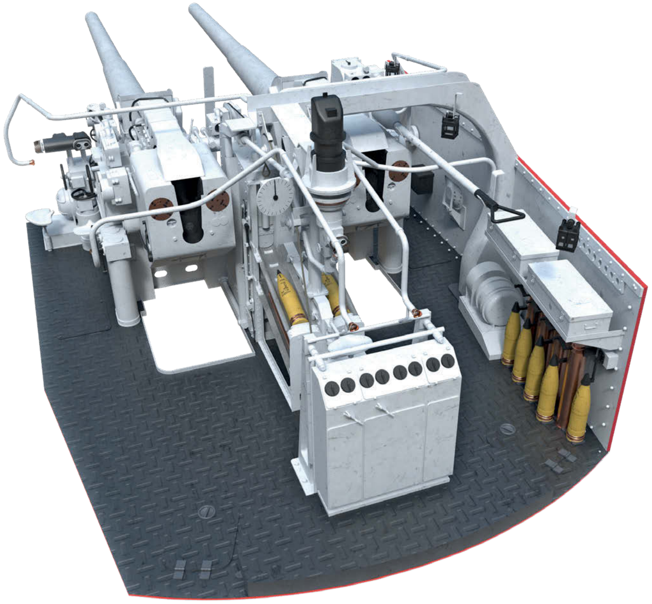

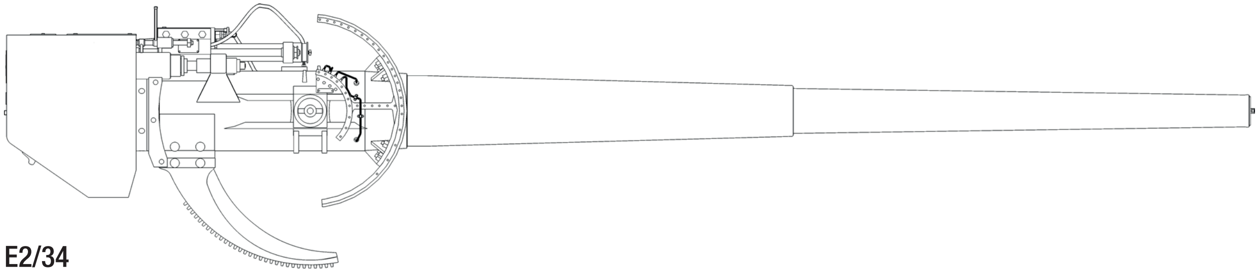

E2/34

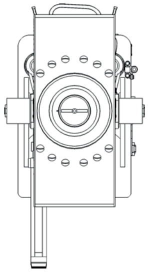

E2/36

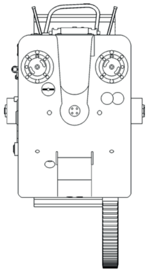

E2/37

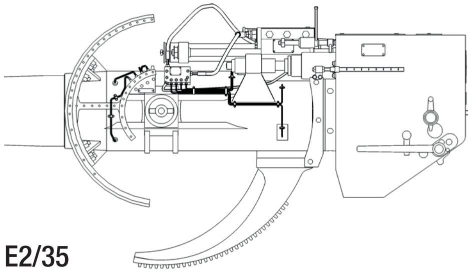

E2/35

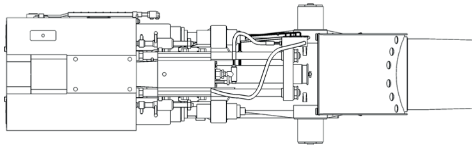

E2/38

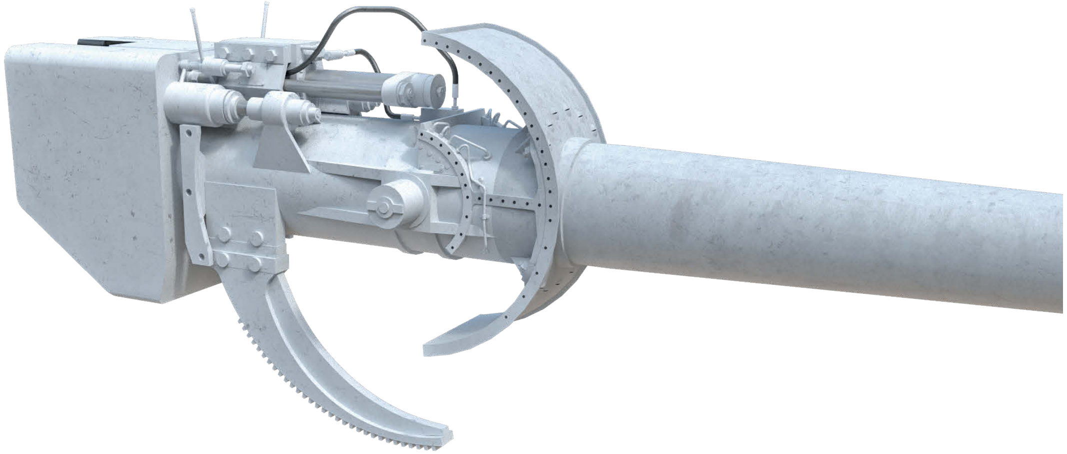

15CM PROJECTILES – PROFILE VIEWS AND SECTIONS (1/8 SCALE)

E2/39 15CM PZGR. L/3,8 (M.HB); PZGR. = *PANZERSPRENGGRANATE*, ARMOUR PIERCING PROJECTILE; M.HB = *MIT HAUBE*, CAPPED

E2/40 15CM SPGR. L/4,5 BDZ (M.HB); SPGR. = *SPRENGGRANATE*, HIGH EXPLOSIVE PROJECTILE; BDZ = *BODENZÜNDER*, BASE FUSE; M.HB = MIT HAUBE, CAPPED

E2/39–43 15CM PROJECTILES

1 Black painted tip – indication of charged projectile
2 Black painted arrow indicating location of fuse
3 Ballistic cap
4 Armour piercing cap
5 Projectile body
6 Bursting charge
7 Expelling charge
8 Illuminating charge
9 Priming charge
10 Propellant charge – powder tubes in silk bag
11 Base fuse
12 Nose fuse
13 Time fuse
14 Rotating bands
15 Projectile weight
16 Projectile and cap number
17 Projectile charging place and date (W=Wilhelmshaven)
18 Bursting charge supply origin and date (Rdf=Reinsdorf)
19 Bursting charge number
20 Cover
21 Knob
22 Cartridge case

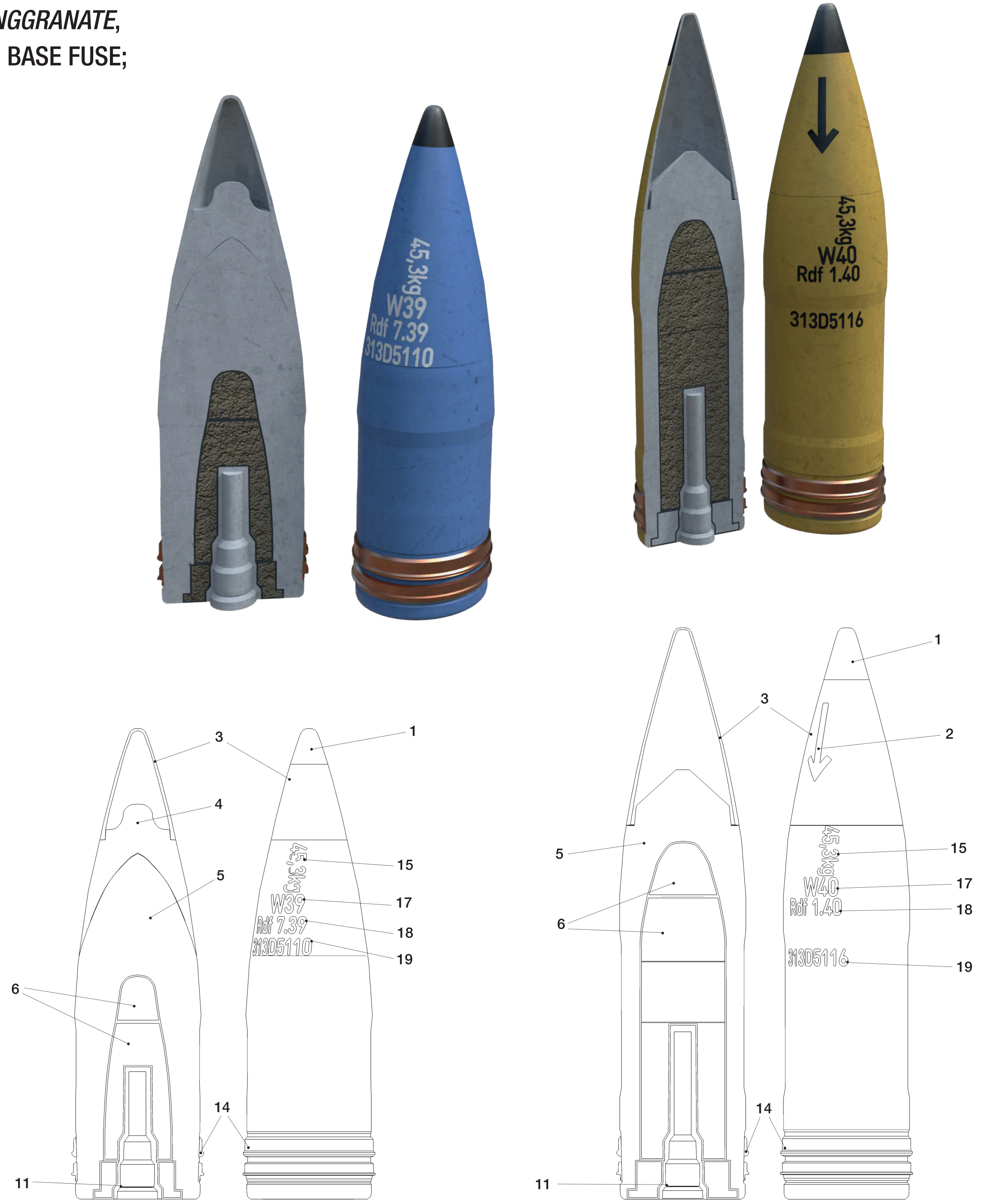

E2/39

E2/40

15CM PROJECTILES – PROFILE VIEWS AND SECTIONS (1/8 SCALE)

E2/41 15CM SPGR. L/4,6 KZ (M.HB); SPGR. = *SPRENGGRANATE*, HIGH EXPLOSIVE PROJECTILE; KZ = *KOPFZÜNDER*, NOSE FUSE; M.HB = *MIT HAUBE*, CAPPED

E2/42 15CM LG L/4,3; LG = *LEUCHTGESCHOSS*, ILLUMINATION PROJECTILE

E2/43 15CM *HÜLSENKARTUSCHE* C/28; PROPELLANT CARTRIDGE

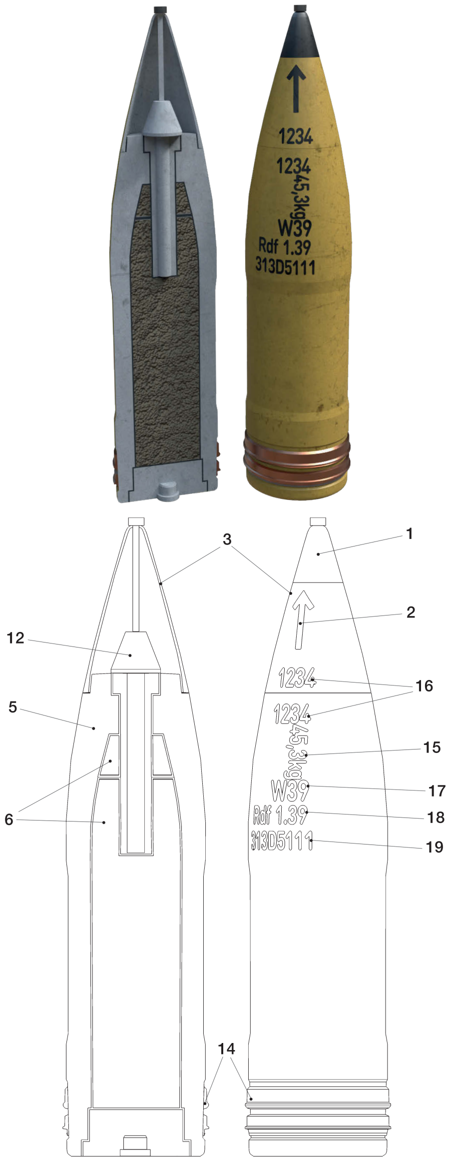

E2/41

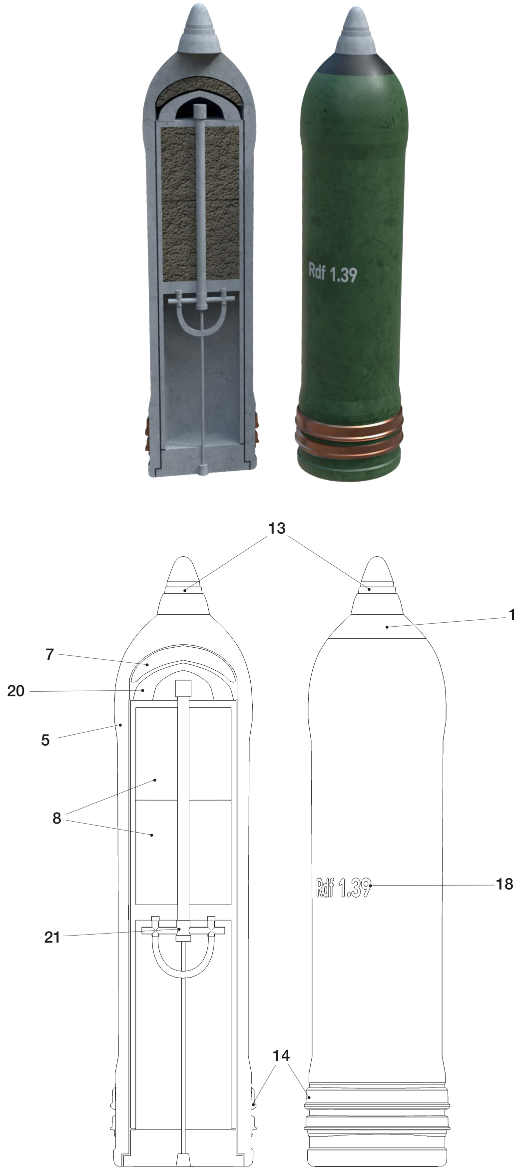

E2/42

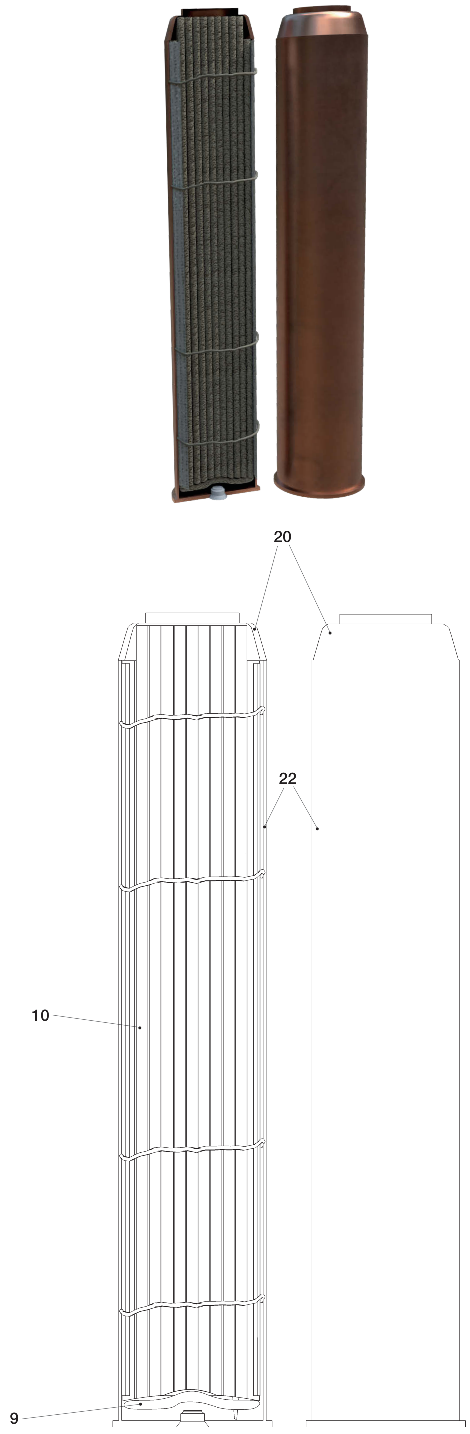

E2/43

15CM *LADEÜBUNGSKANONE* – PRACTICE LOADING MACHINE WITH AMMUNITION RACK (1/75 SCALE)

E2/44 RIGHT PROFILE
E2/45 LEFT PROFILE
E2/46 FRONT VIEW
E2/47 BACK VIEW
E2/48 PLAN

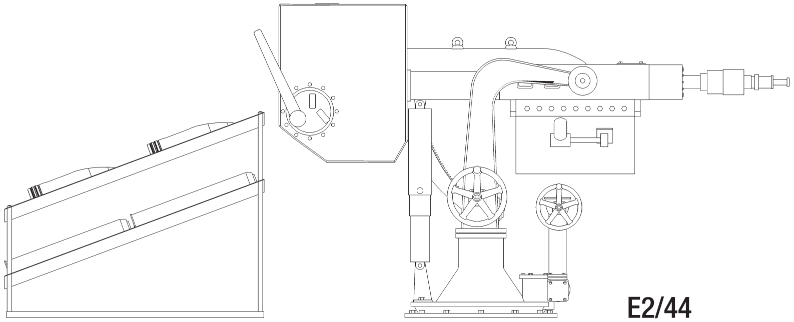

E2/44

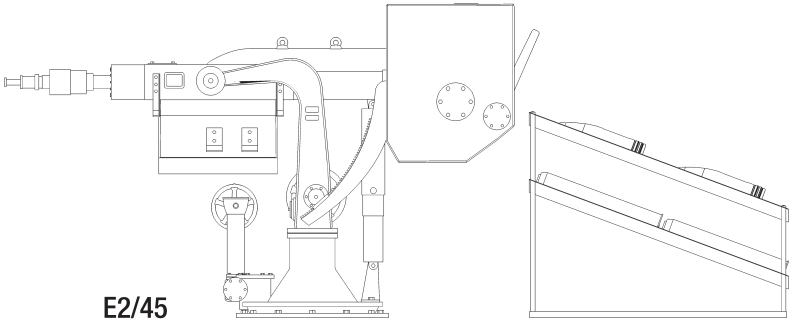

E2/45

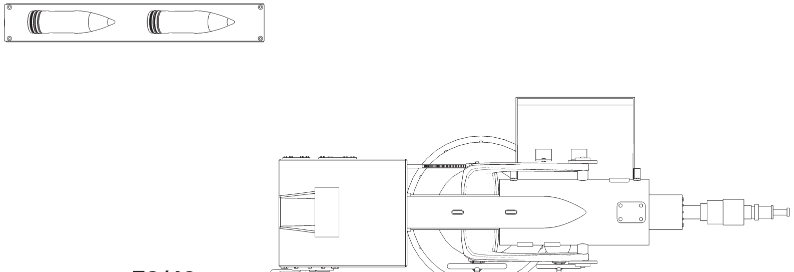

E2/48

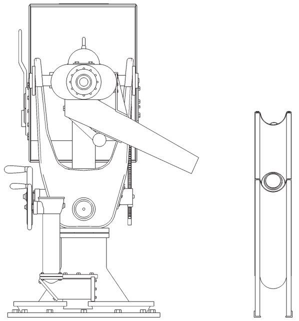

E2/46

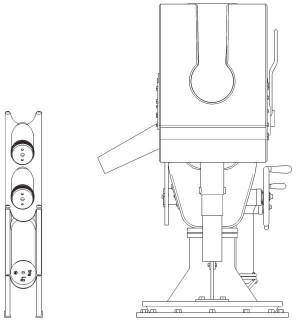

E2/47

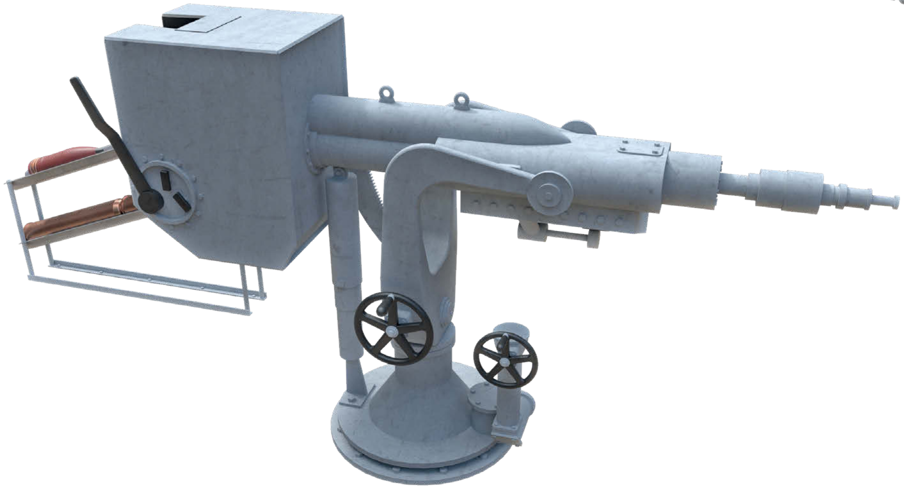

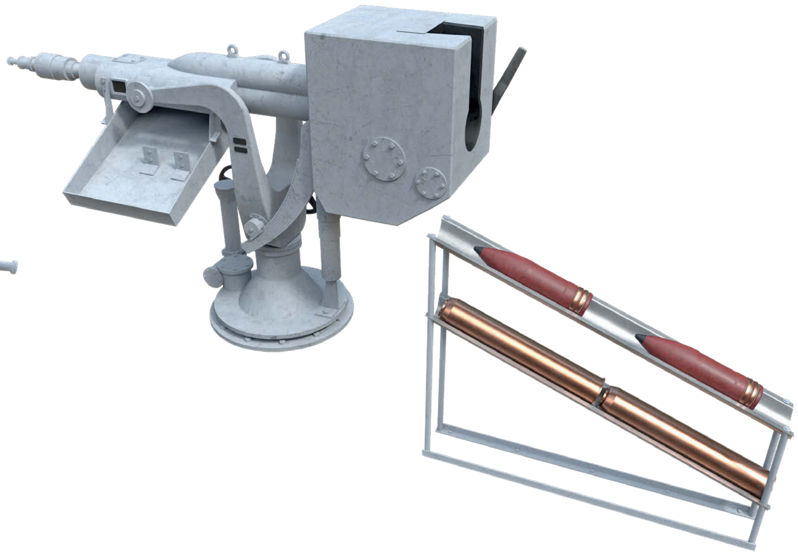

10.5CM SK C/33 GUNS IN THE DOPP L C/31GE TWIN MOUNT (1/50 SCALE)

E3/1 RIGHT PROFILE
E3/2 LEFT PROFILE – SIGHT SHIELDS REMOVED AND GUNS ELEVATED TO +30°
E3/3 FRONT VIEW
E3/4 BACK VIEW
E3/5 PLAN

E3/1–5 10.5CM TWIN MOUNT

1 Mount pedestal
2 Mount shield
3 Projectile time fuse setter
4 Access door
5 Foot step
6 Cross-levelling sight housing
7 Sight shield
8 Sight
9 Elevation arc
10 Gun cradle
11 Gun cradle rotation trunnion
12 Gun barrel
13 Recoil cylinder and reloading drive under shield
14 Breech operating lever
15 Breech housing
16 Bar for attaching canvas cover

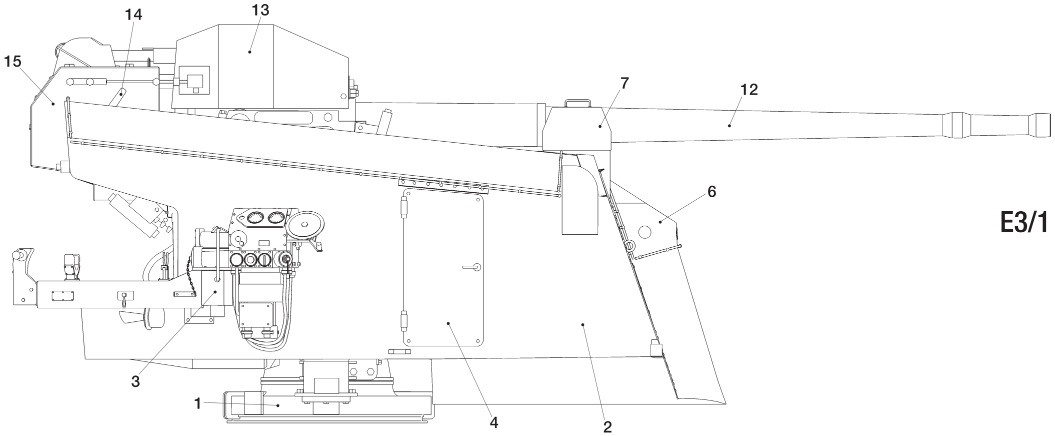

E3/1

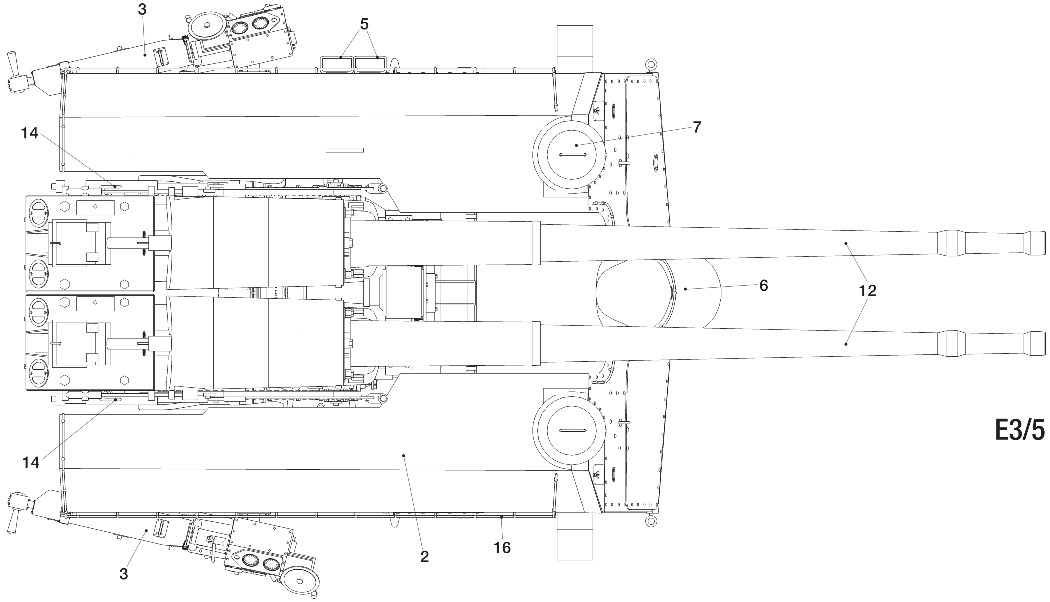

E3/5

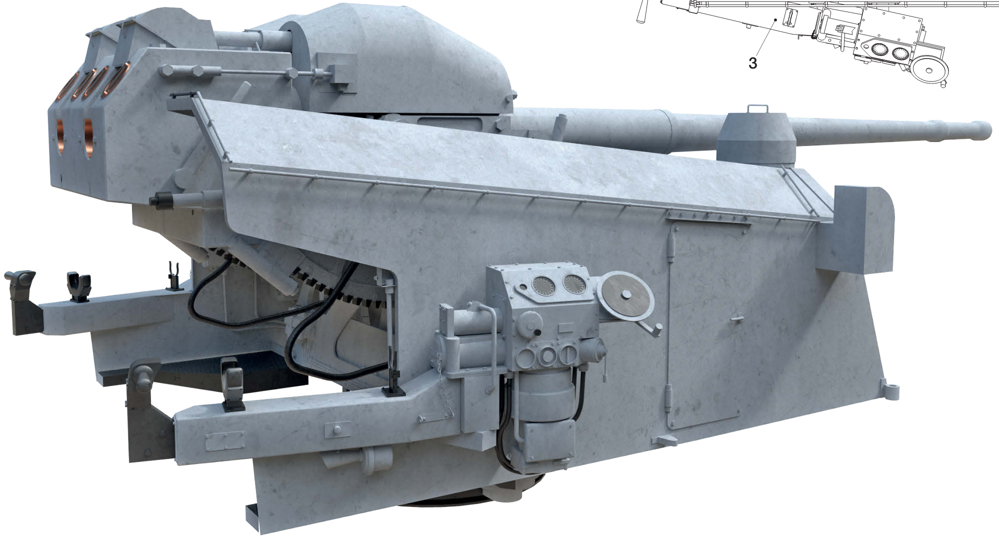

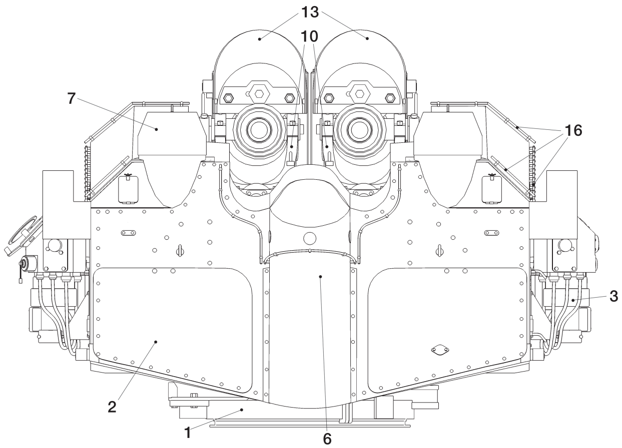

E3/3

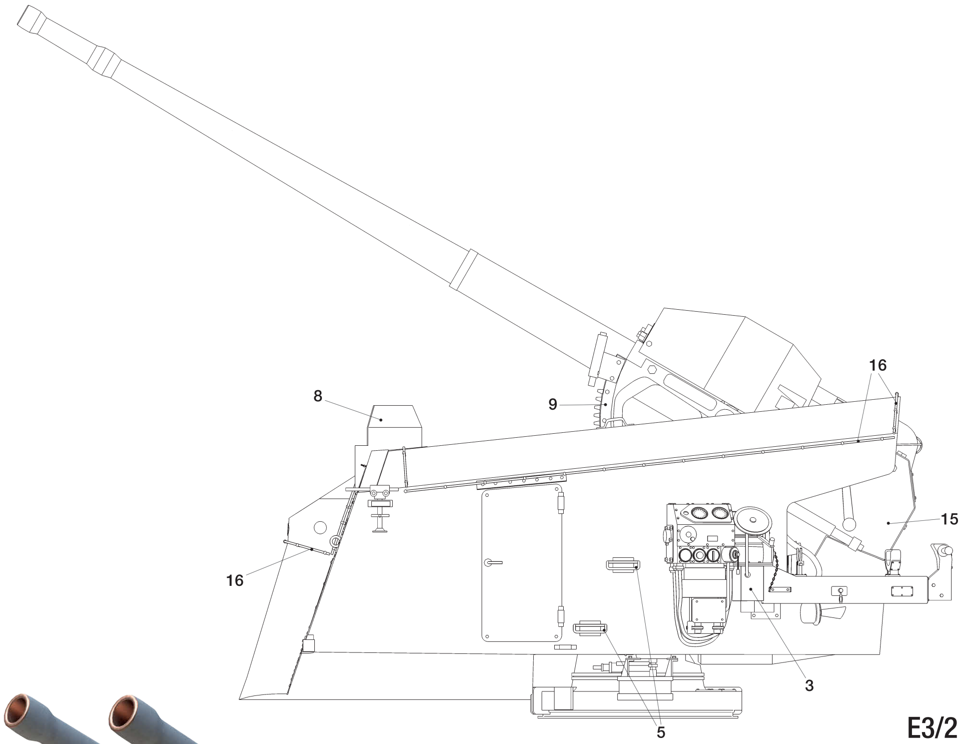

E3/2

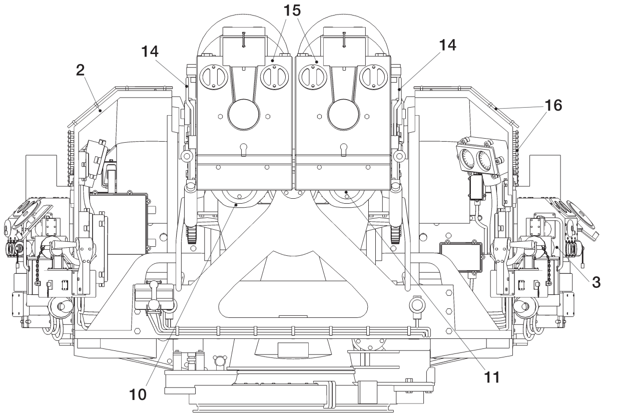

E3/4

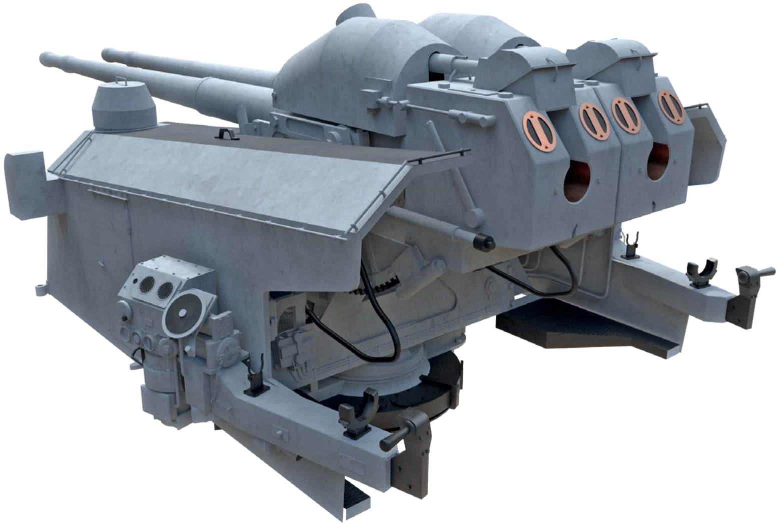

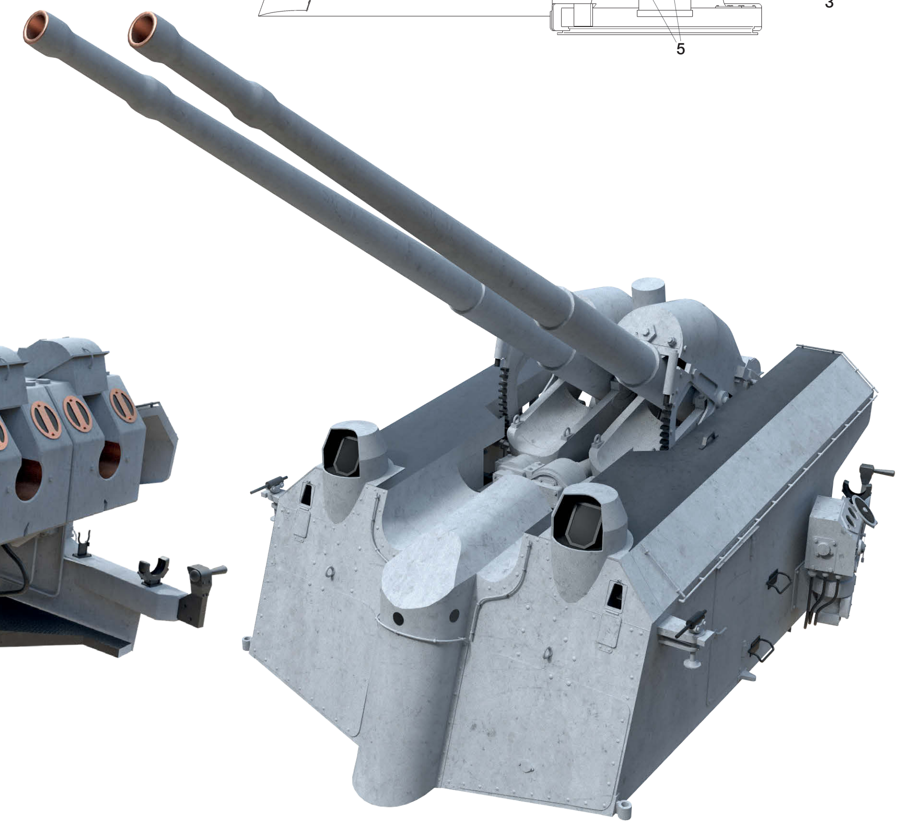

10.5CM SK C/33 GUNS IN THE DOPP L C/31GE TWIN MOUNT
(1/50 SCALE)

E3/6 RIGHT PROFILE (FRAGMENT) – TWO FOREMOST MOUNTS ONLY
E3/7 FRONT VIEW (FRAGMENT) – TWO FOREMOST MOUNTS ONLY
E3/8 PLAN (FRAGMENT) – TWO FOREMOST MOUNTS ONLY
E3/9 FRONT VIEW (FRAGMENT) – SIGHT SHIELDS REMOVED
E3/10 PLAN (FRAGMENT) – SIGHT SHIELDS REMOVED

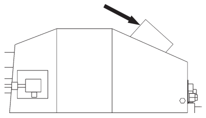

E3/6

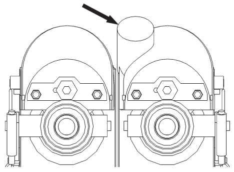

E3/7

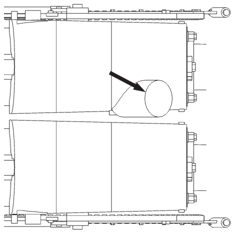

E3/8

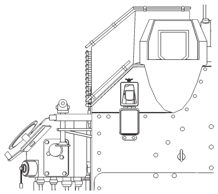

E3/9

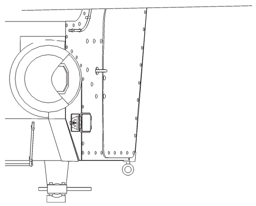

E3/10

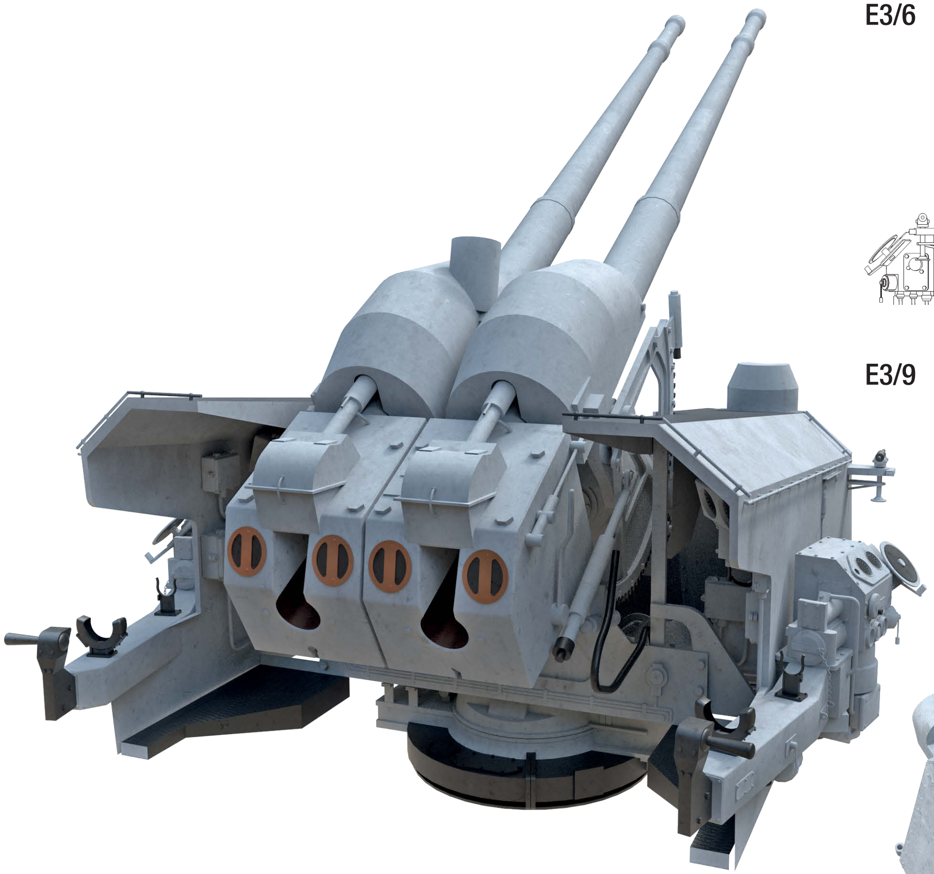

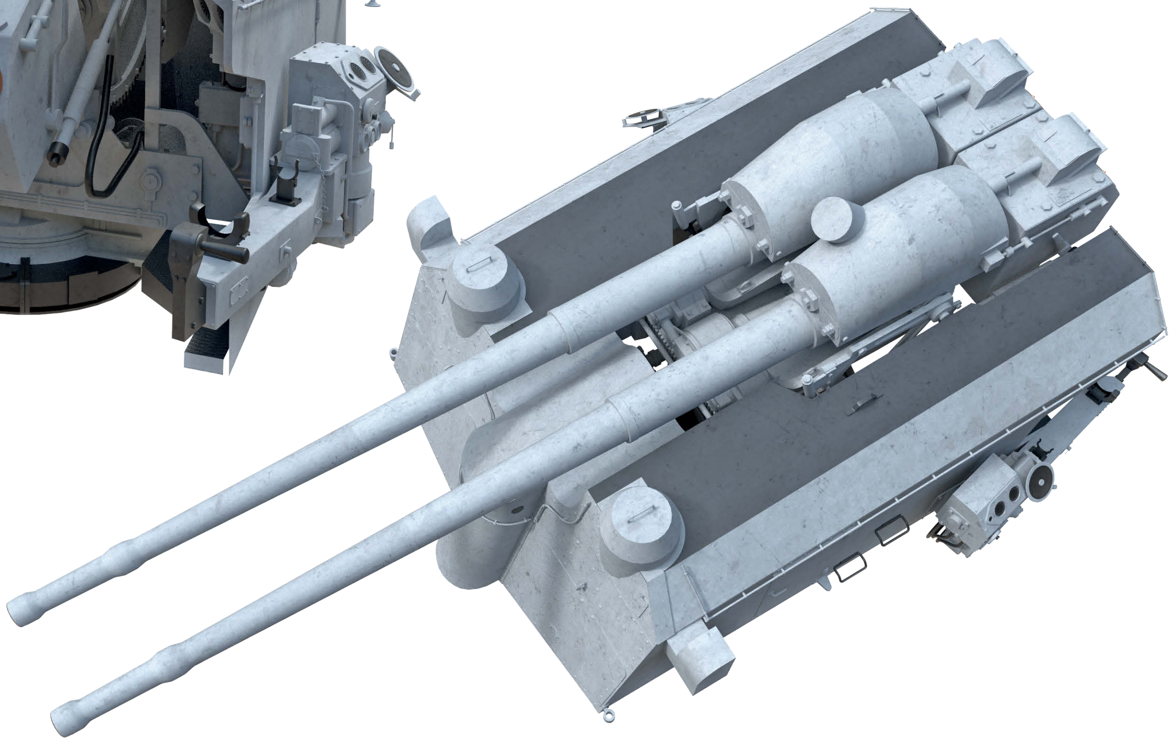

February 1942

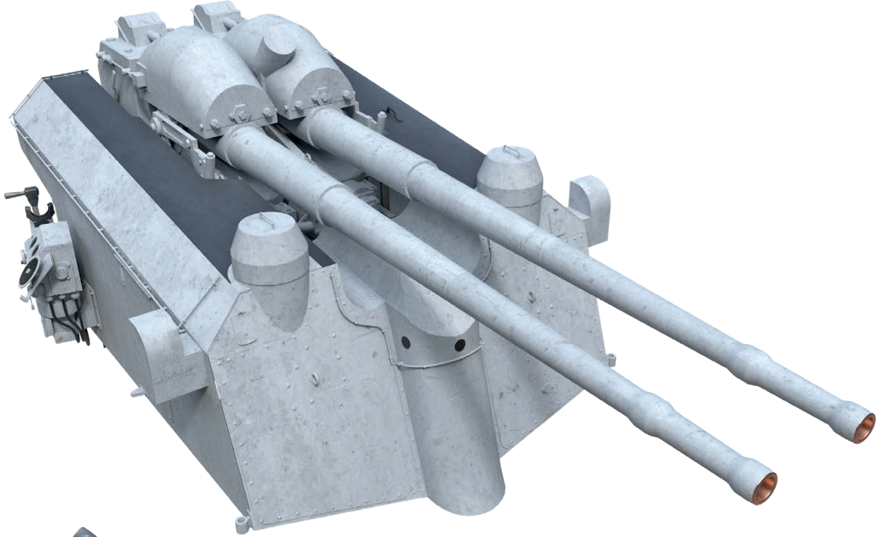

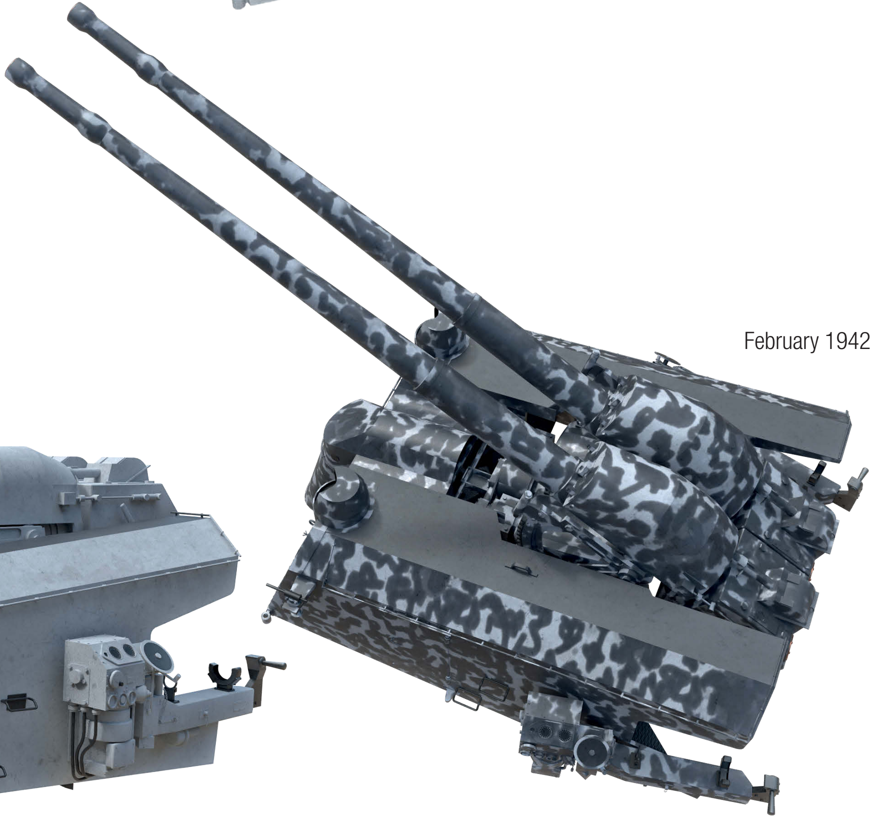

February 1942

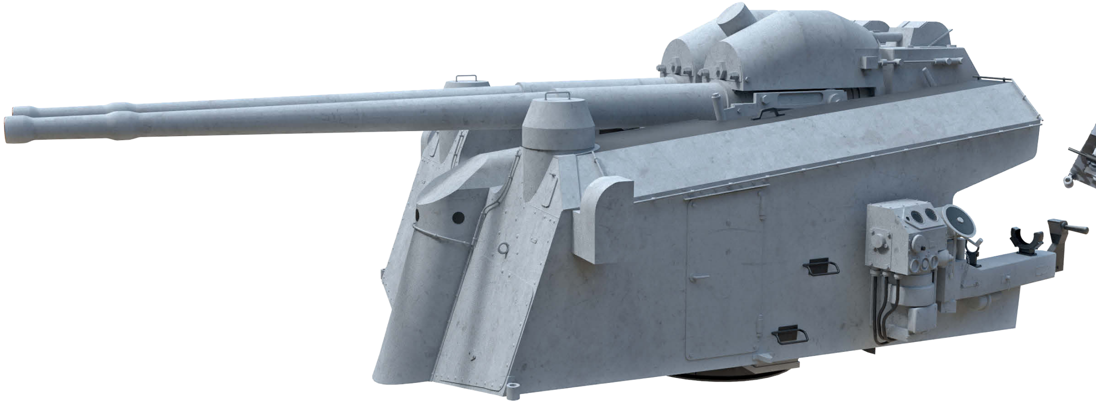

10.5CM SK C/33 GUNS IN THE DOPP L C/31D TWIN MOUNT, FROM MID-1939 (1/50 SCALE)

E3/11 RIGHT PROFILE (FRAGMENT) – AFTERMOST CENTRELINE MOUNT ONLY

E3/12 BACK VIEW – AFTERMOST CENTRELINE MOUNT ONLY

E3/13 PLAN (FRAGMENT) – AFTERMOST CENTRELINE MOUNT ONLY

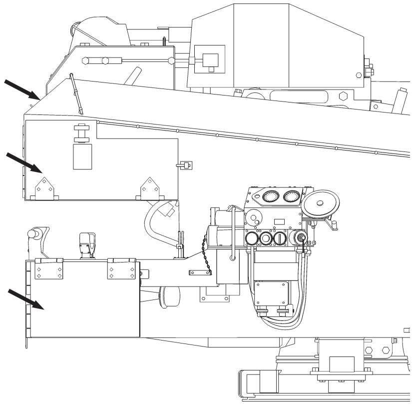

E3/11

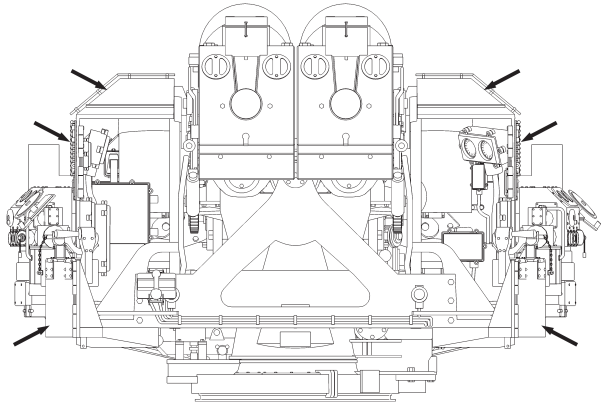

E3/12

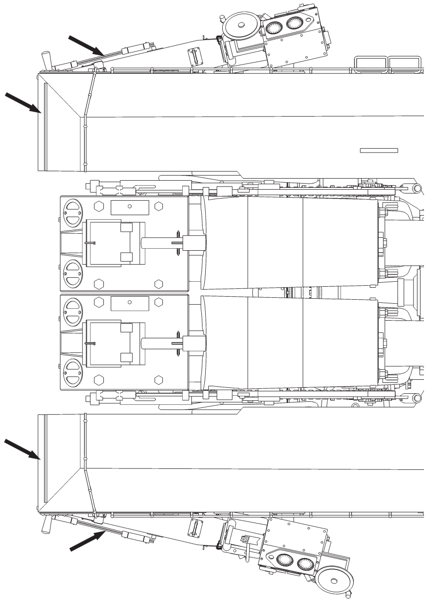

E3/13

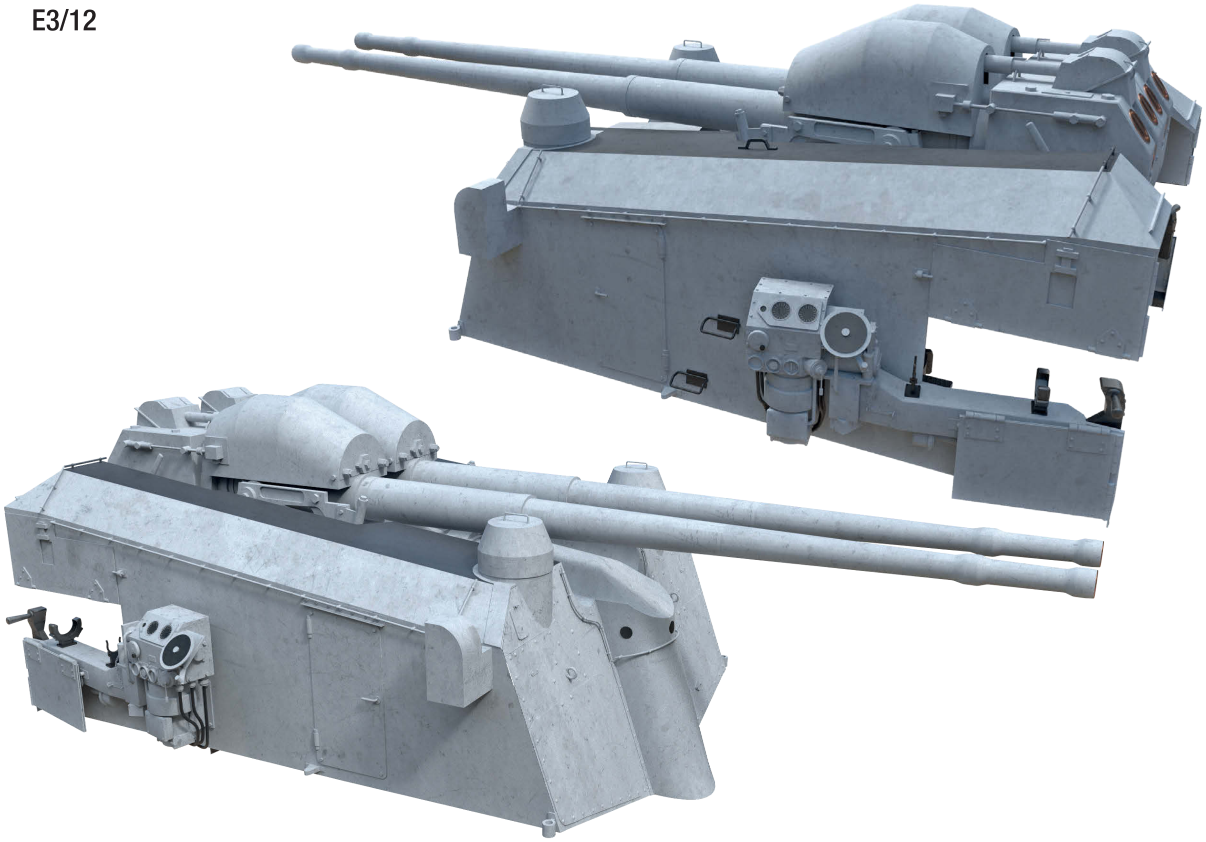

10.5CM SK C/33 GUNS IN THE DOPP L C/31 TWIN MOUNT – INSIDE VIEWS (1/50 SCALE)

E3/14 RIGHT PROFILE (FRAGMENT)

E3/15 LEFT PROFILE (FRAGMENT)

E3/14–18 10.5CM TWIN MOUNT – INSIDE VIEW

1 Elevation arc
2 Gun cradle
3 Gun cradle rotation trunnion
4 Breech operating lever
5 Elevation arc stop
6 Mount train drive
7 Trainer's seat
8 Pointer's seat
9 Cross-leveller's seat
10 Deflection setter's seat
11 Trainer's handwheel
12 Pointer's handwheel
13 Cross-leveller's handwheel
14 Trainer's sight
15 Pointer's sight
16 Cross-leveller's sight

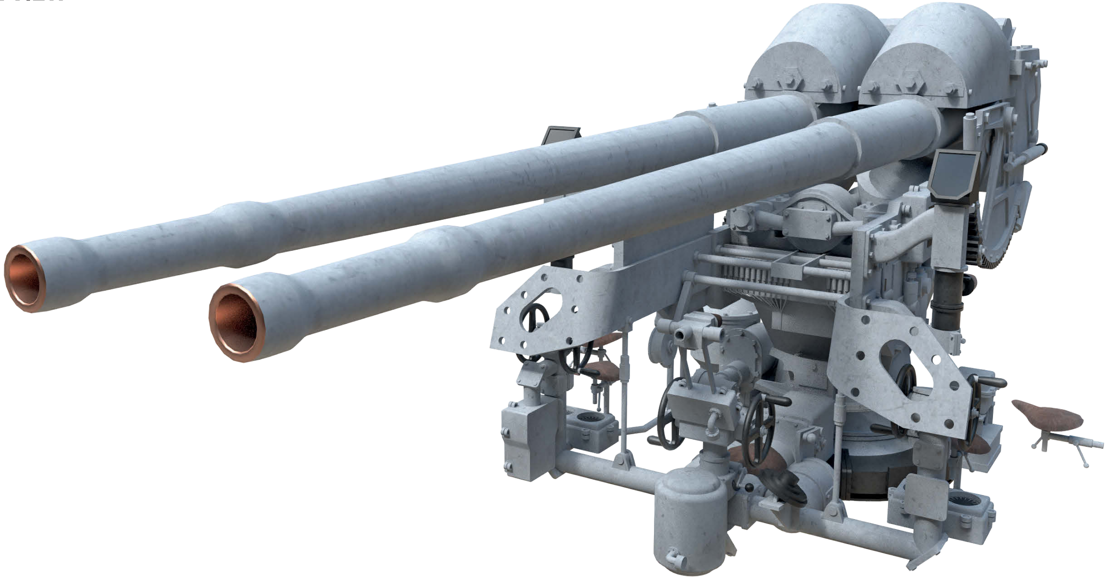

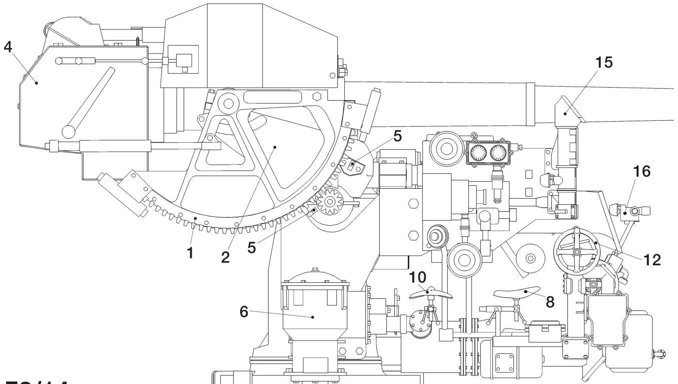

E3/14

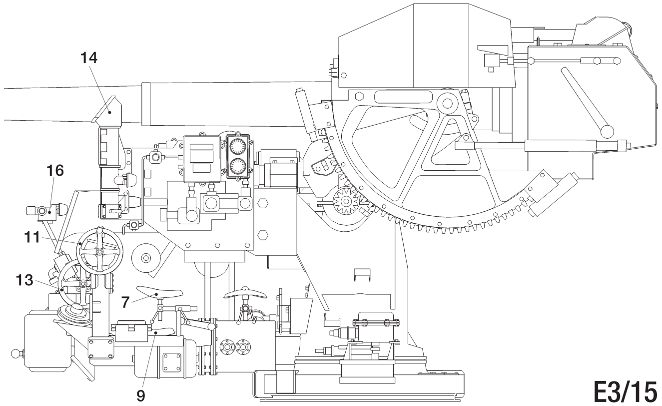

E3/15

10.5CM SK C/33 GUNS IN THE DOPP L C/31 TWIN MOUNT – INSIDE VIEWS (1/50 SCALE)

E3/16 FRONT VIEW

E3/17 BACK VIEW

E3/18 PLAN (FRAGMENT)

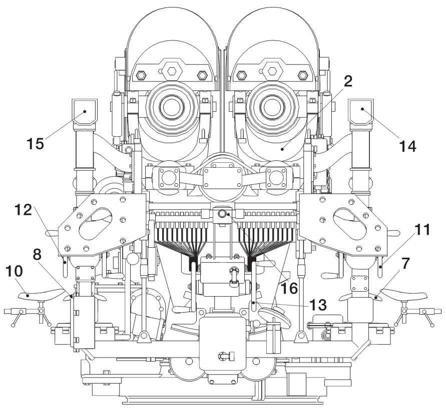

E3/16

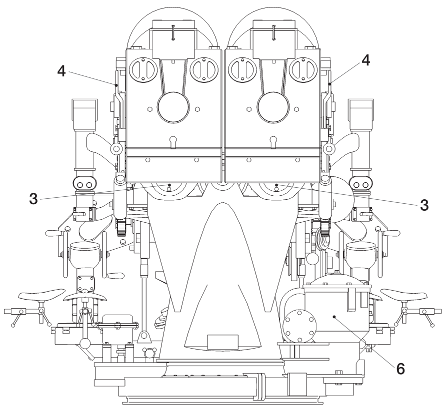

E3/17

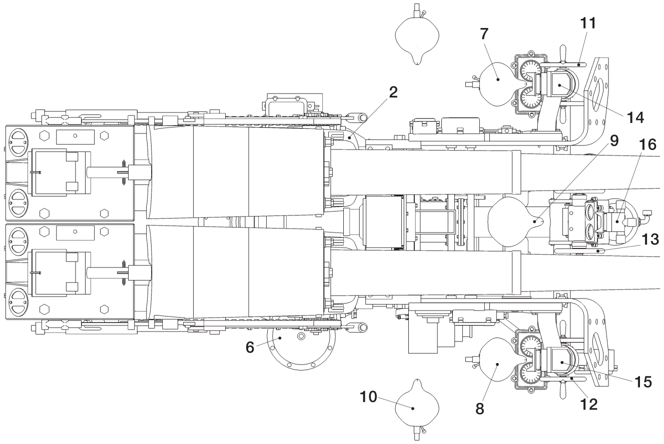

E3/18

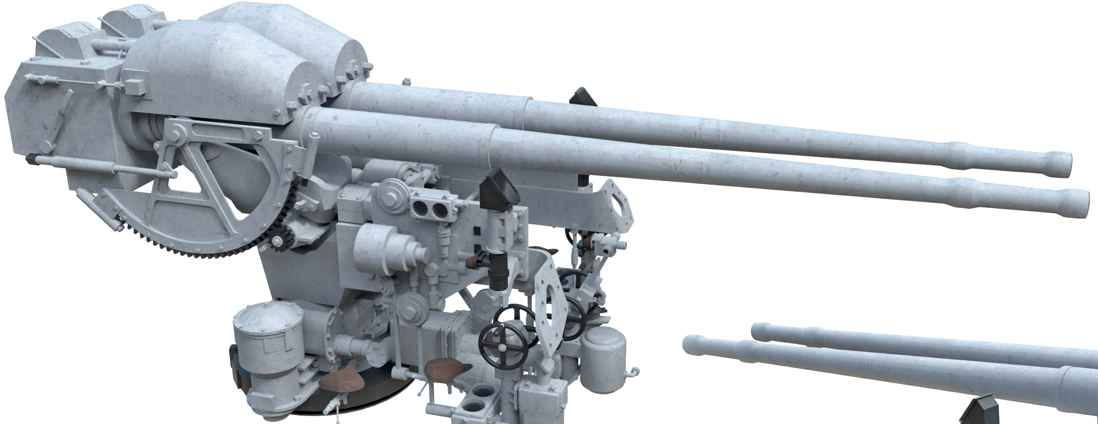

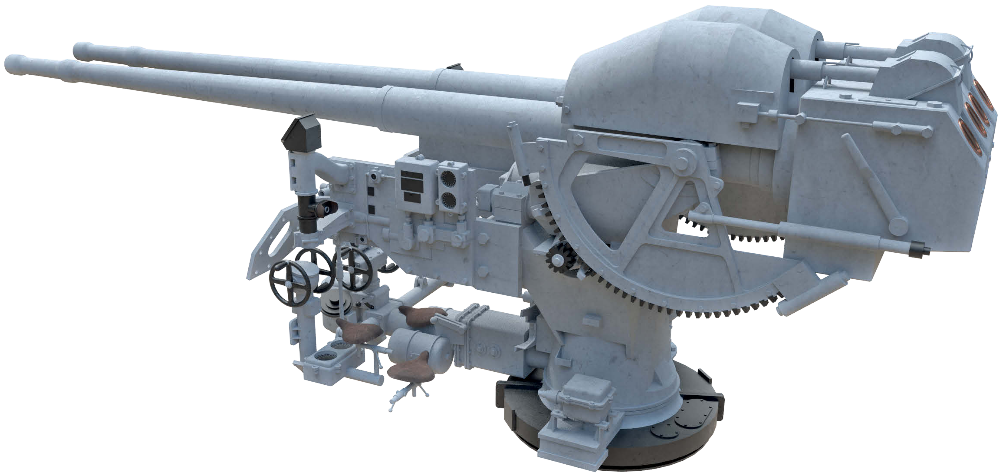

10.5CM *LADEÜBUNGSKANONE* – PRACTICE LOADING MACHINE (1/50 SCALE)

E3/19 RIGHT PROFILE
E3/20 LEFT PROFILE
E3/21 FRONT VIEW
E3/22 BACK VIEW
E3/23 PLAN

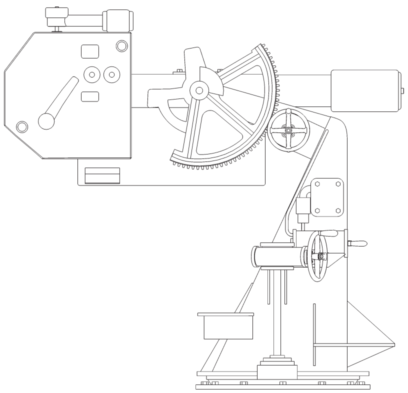

E3/19

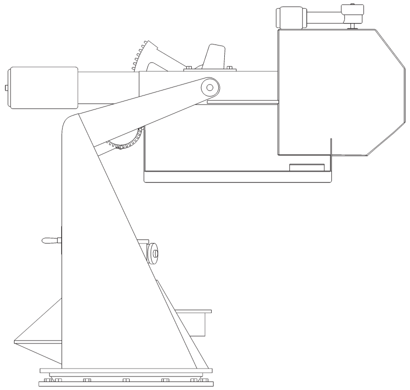

E3/20

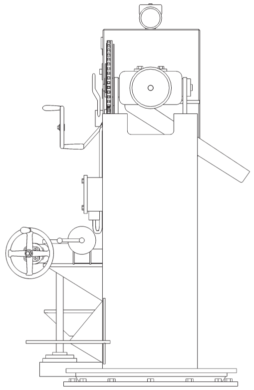

E3/21

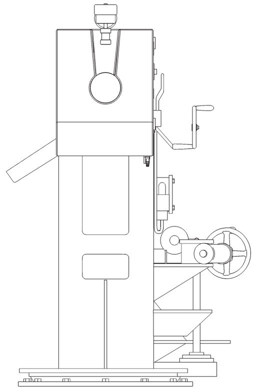

E3/22

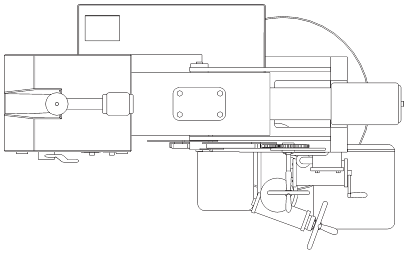

E3/23

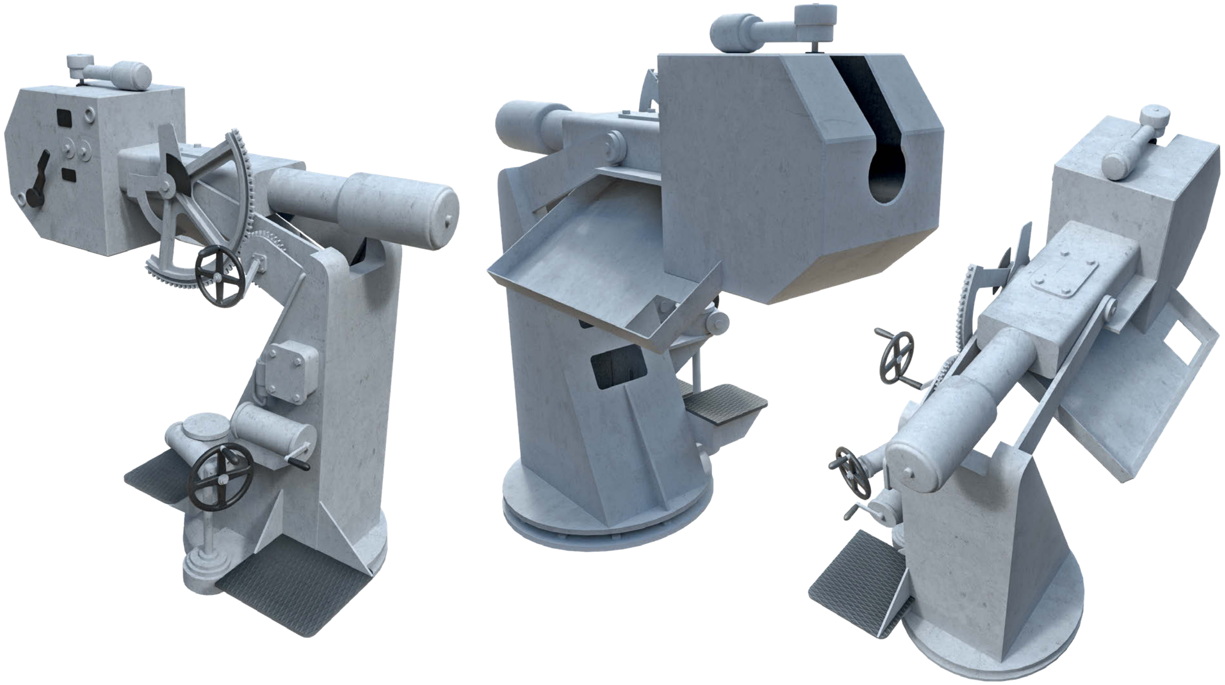

3.7CM SK C/30 GUNS IN THE DOPP L C/30 TWIN MOUNT (1/25 SCALE)

E4/1 RIGHT PROFILE

E4/2 LEFT PROFILE

E4/1–8 3.7CM TWIN MOUNT

1 Mount body
2 Mount pedestal
3 Training drive gearbox
4 Gyroscope gear cover
5 Train limiter
6 Cross-levelling mechanism setting lever
7 Mount platform
8 Electrical fuse box
9 Gyroscope drive
10 Bar for attaching canvas cover
11 Trainer's seat
12 Pointer's seat
13 Cross-leveller's seat
14 Seat suspension
15 Trainer's handwheel
16 Pointer's handwheel
17 Cross-leveller's handwheel
18 Sight carriage bar (rotatable)
19 Pointer's sight (*Reflexvisier*)
20 Trainer's sight (*Reflexvisier*)
21 Cross-leveller's sight
22 Correction box
23 Counterweight
24 Elevation arc
25 Trunnion
26 Gun cradle
27 Gun cradle rotation trunnion
28 Gun barrel
29 Recoil cylinder
30 Recuperator
31 Breech automatic opening linkage
32 Recoil meter
33 Vertical sliding breech block
34 Breech operating lever
35 Breech housing
36 Ready-to-fire indicator

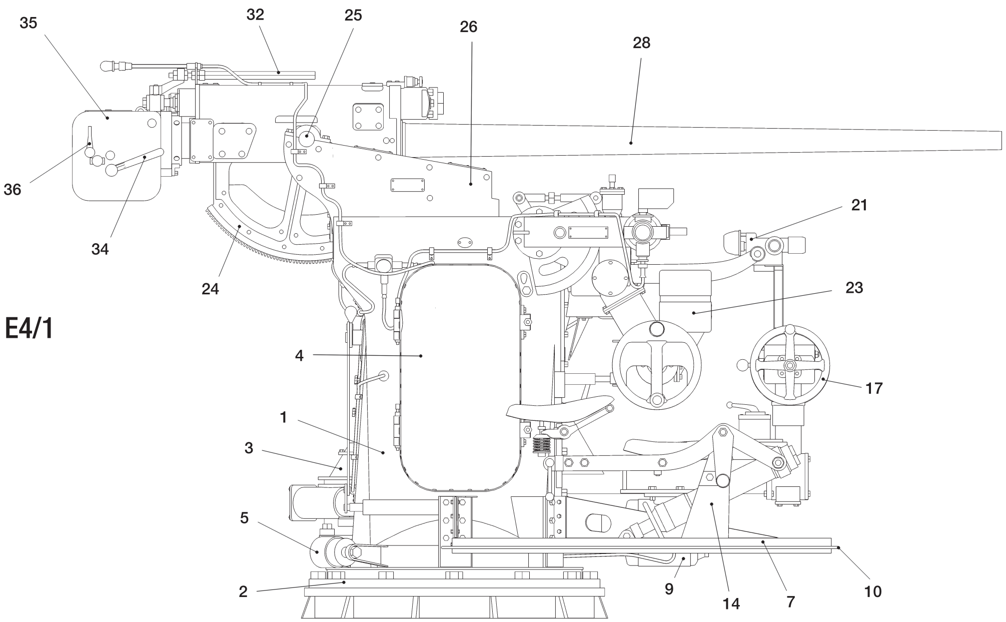

E4/1

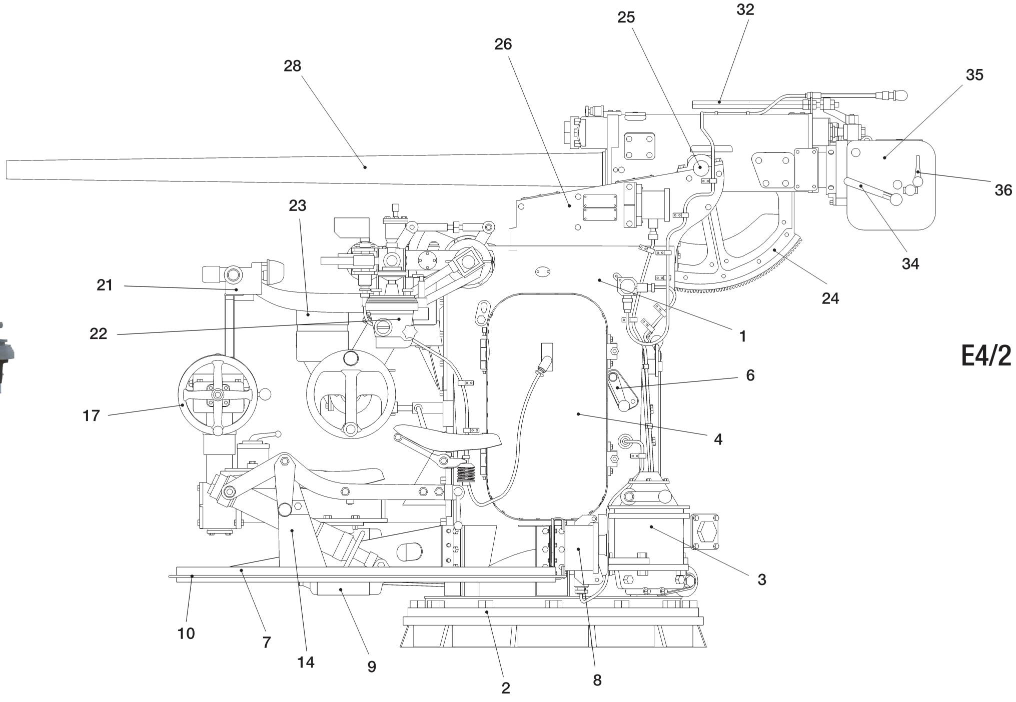

E4/2

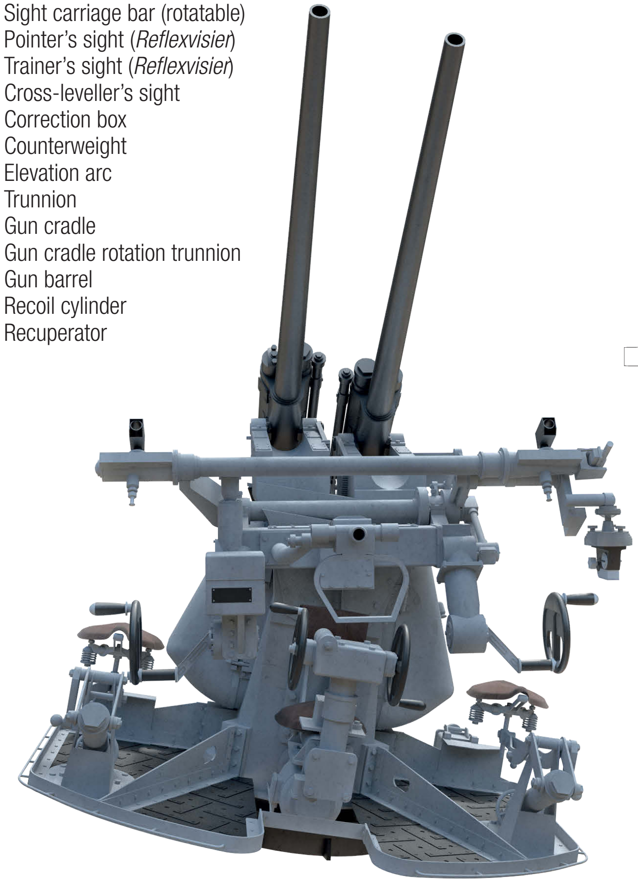

E4/3 GUN INNER SIDE
E4/4 FRONT VIEW
E4/5 BACK VIEW

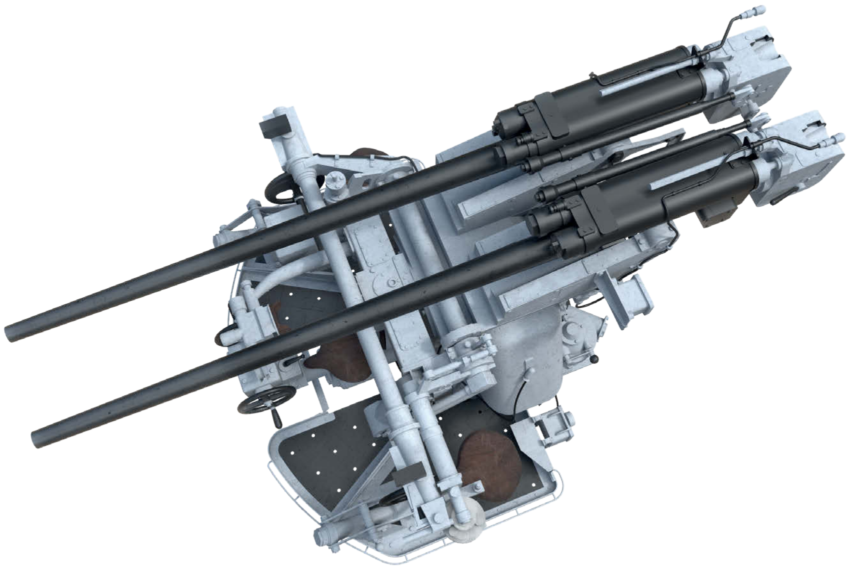

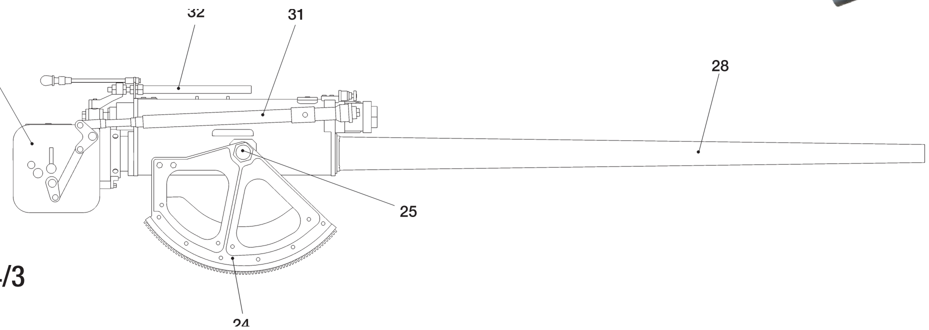

E4/3

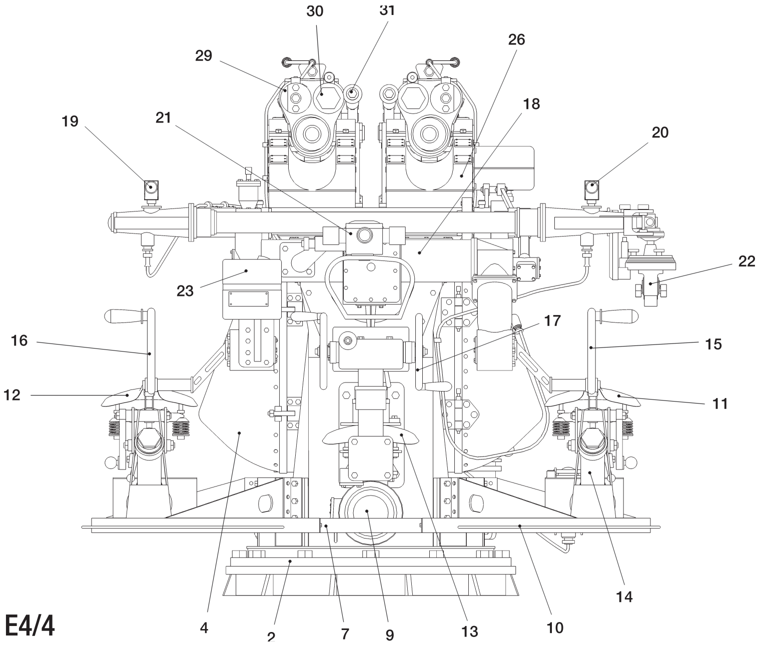

E4/4

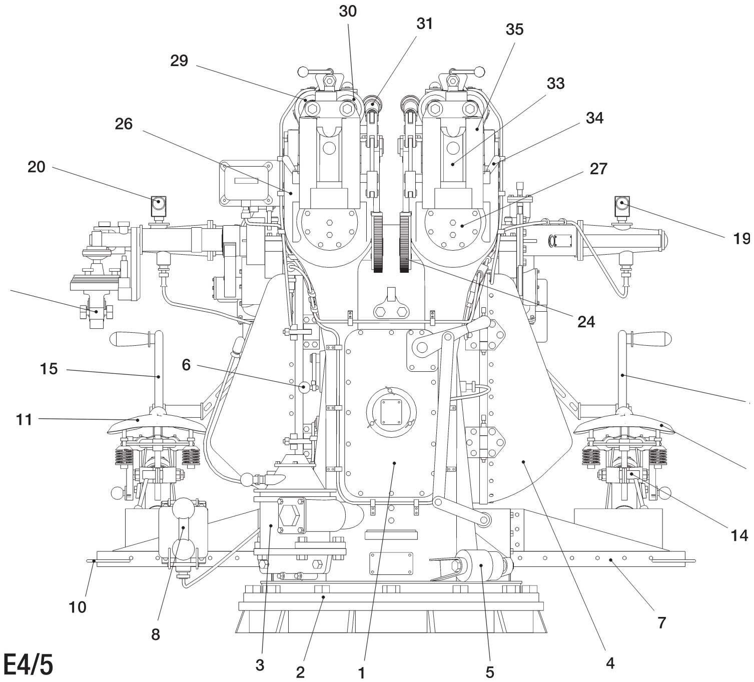

E4/5

3.7CM SK C/30 GUNS IN THE DOPP L C/30 TWIN MOUNT (1/25 SCALE)

E4/6 PLAN

E4/7 FRONT VIEW DURING CROSS-LEVELLING OPERATION

E4/8 BACK VIEW DURING CROSS-LEVELLING OPERATION

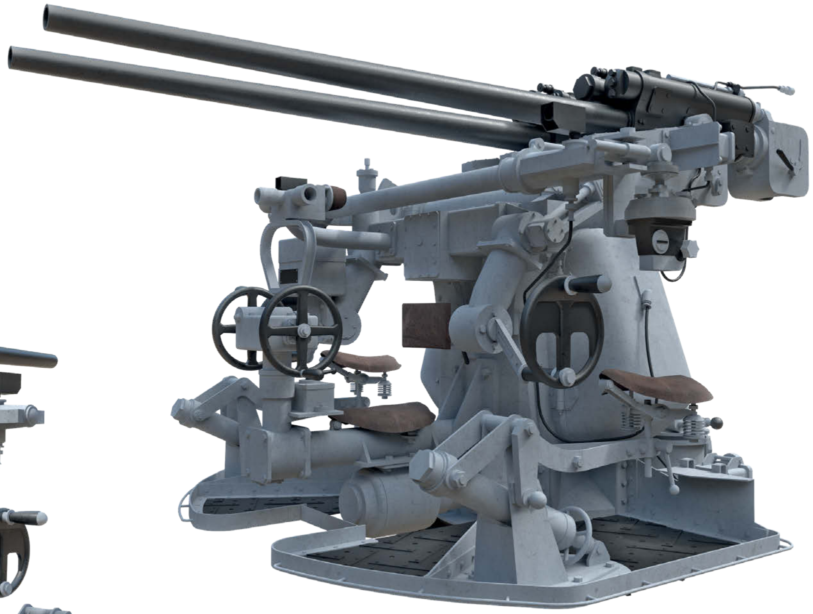

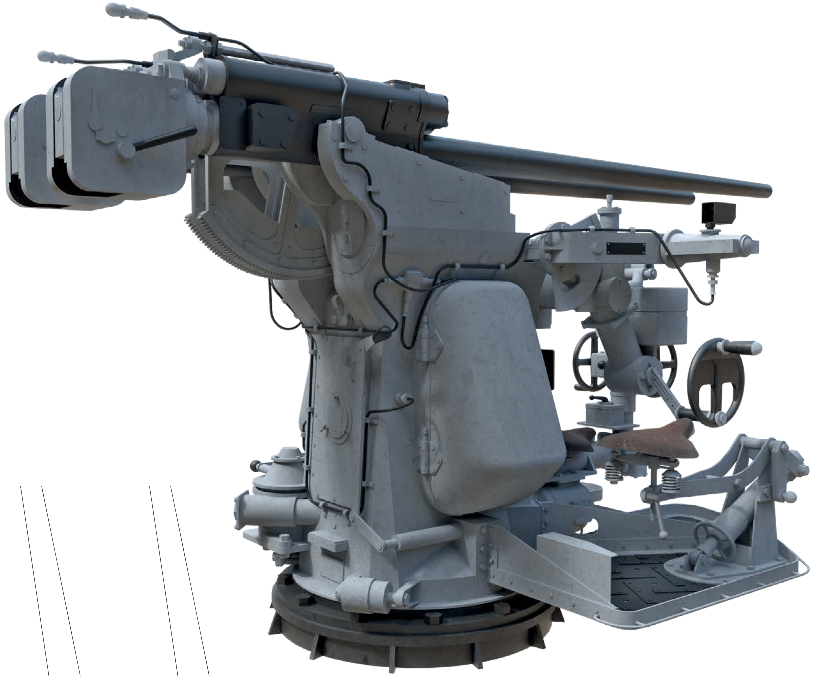

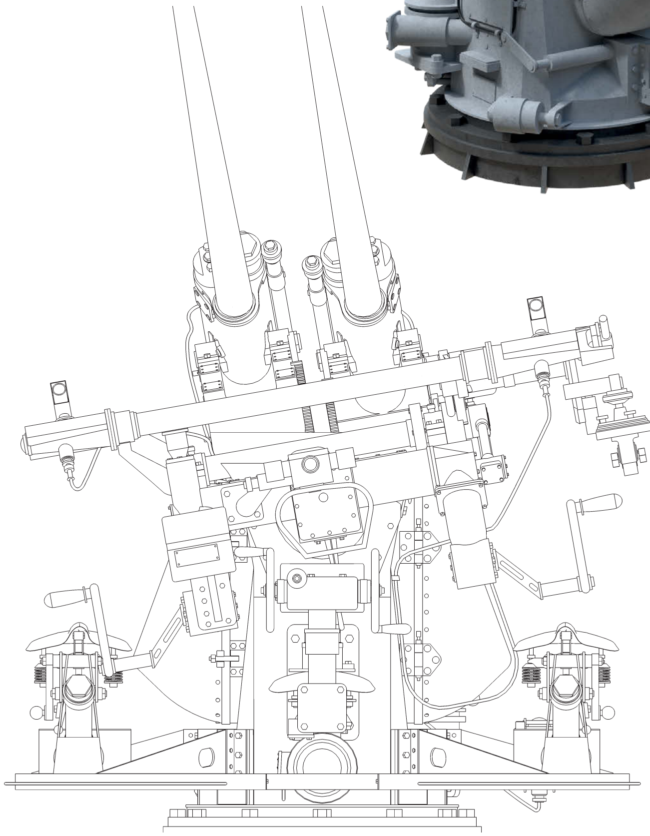

E4/7

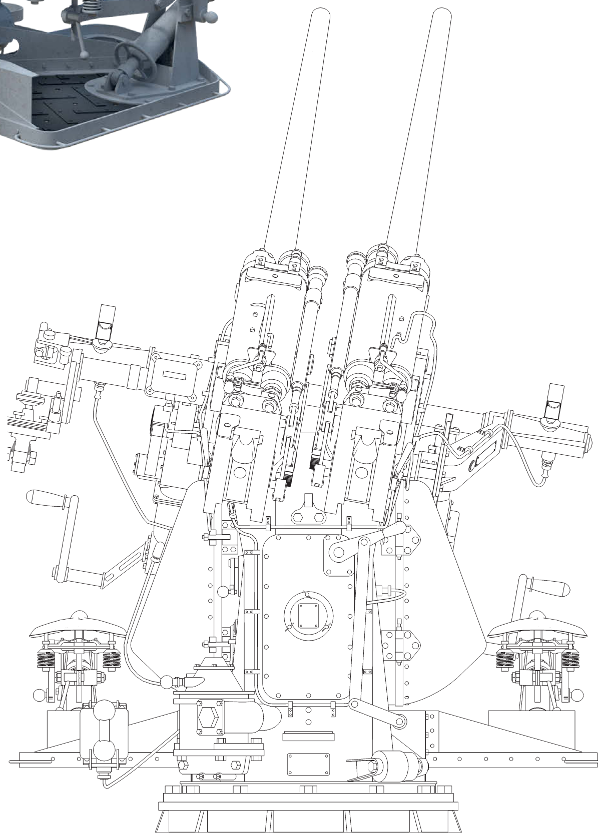

E4/8

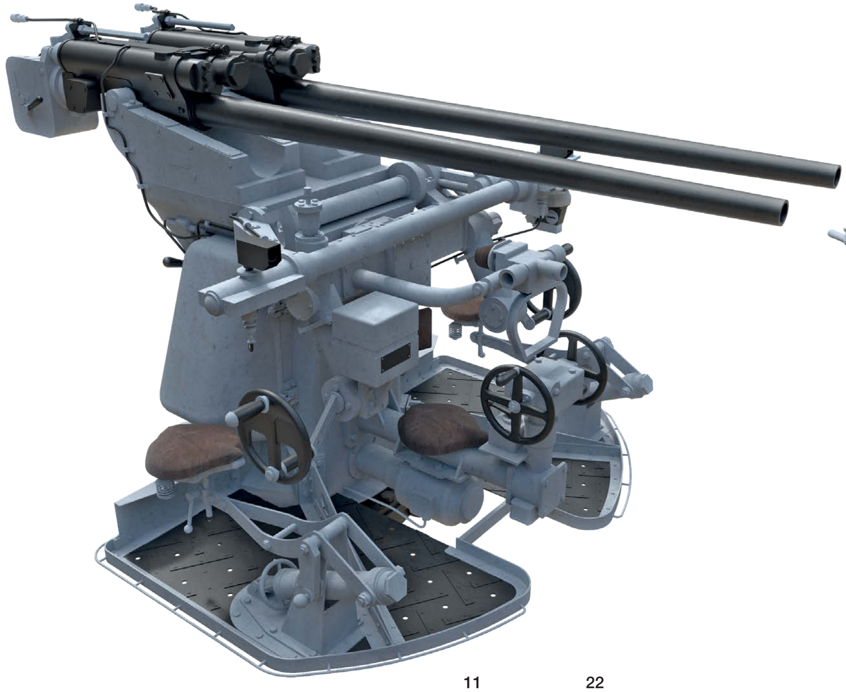

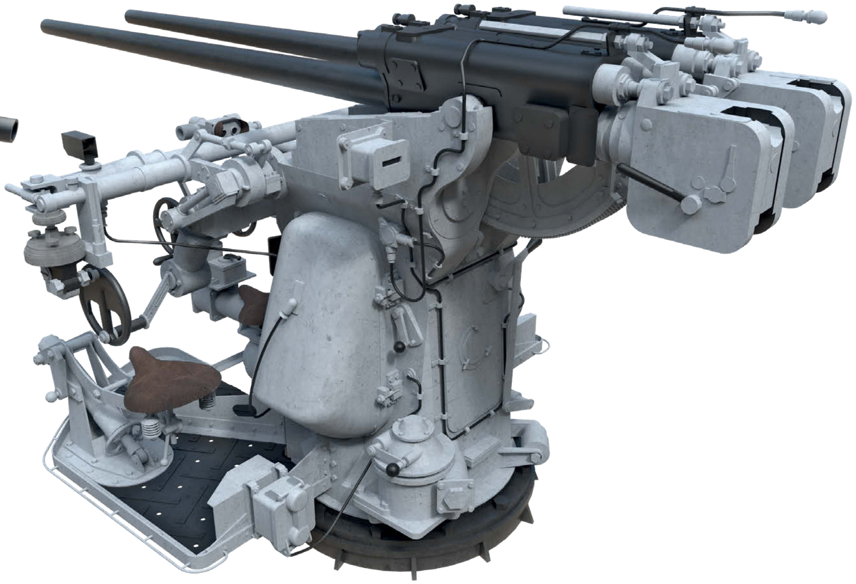

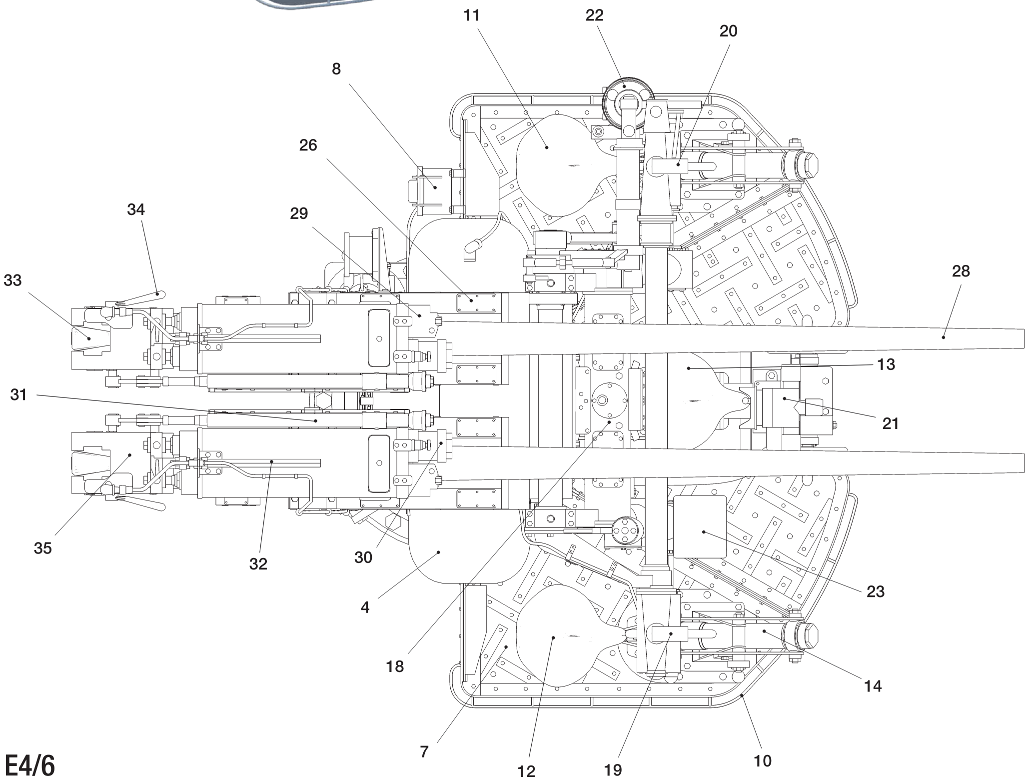

E4/6

2CM C/30 GUN IN THE SL C/30 SINGLE MOUNT, 1939–JANUARY 1941 (1/25 SCALE)

E5/1 RIGHT PROFILE (COMBAT POSITION)
E5/2 RIGHT PROFILE (WITH GUN CRADLE AT MAXIMUM ELEVATION)
E5/3 RIGHT PROFILE (STOWED POSITION)
E5/4 LEFT PROFILE
E5/5 FRONT VIEW
E5/6 BACK VIEW
E5/7 PLAN

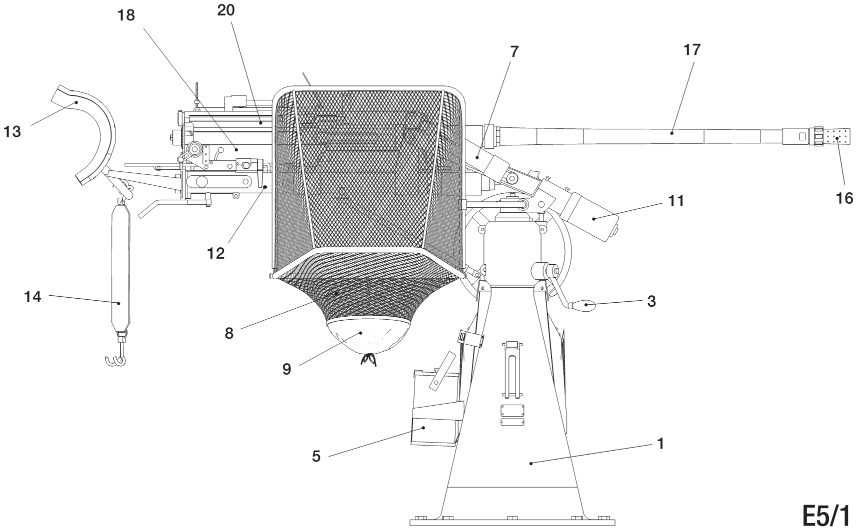

E5/1

E5/1–7 2CM SINGLE MOUNT

1 Mount pedestal
2 Elevation handwheel
3 Elevation fixing lever
4 Ready-to-use ammunition rack for 5 magazines
5 Battery
6 Rod for fixing the cradle in horizontal position
7 Spring compensator
8 Empty cases catcher
9 Bag for empty cases
10 Trunnion
11 Swing axis
12 Gun cradle
13 Gunner's shoulder rest
14 Shoulder rest strap
15 Hand grip
16 Flash guard
17 Gun barrel
18 Gun body
19 Cocking handle
20 Breech cover
21 Ammunition magazine for 20 rounds
22 Sight

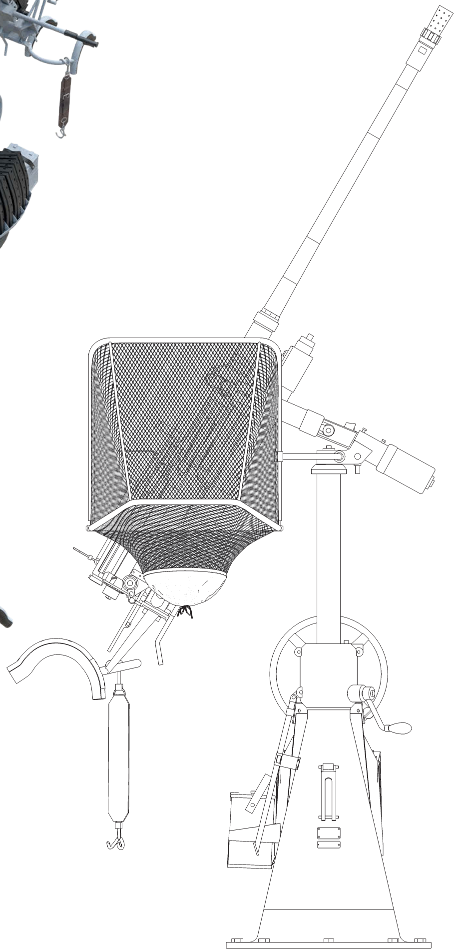

E5/2

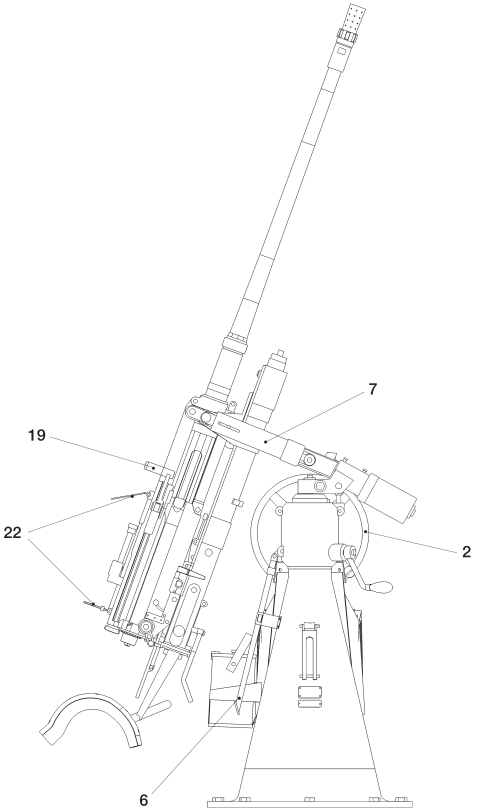

E5/3

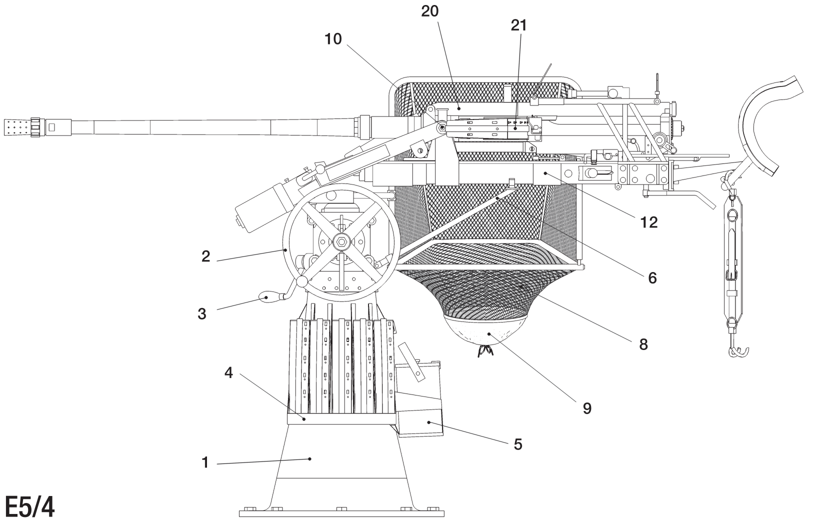

E5/4

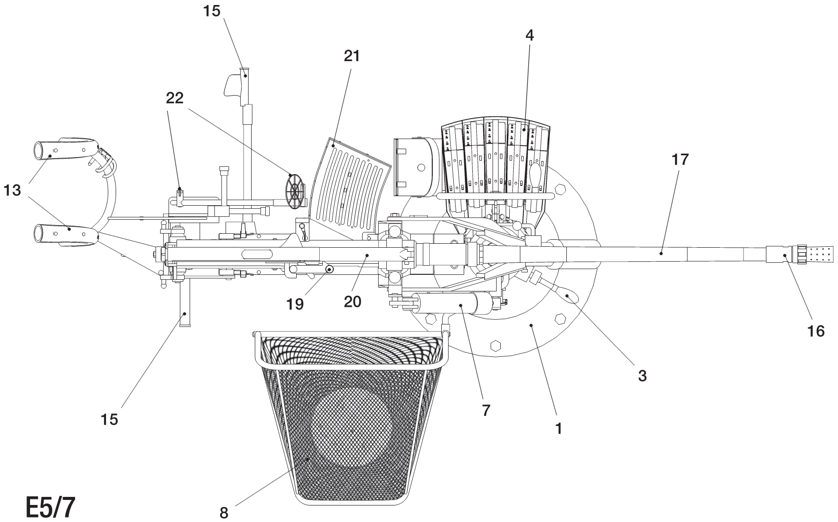

E5/7

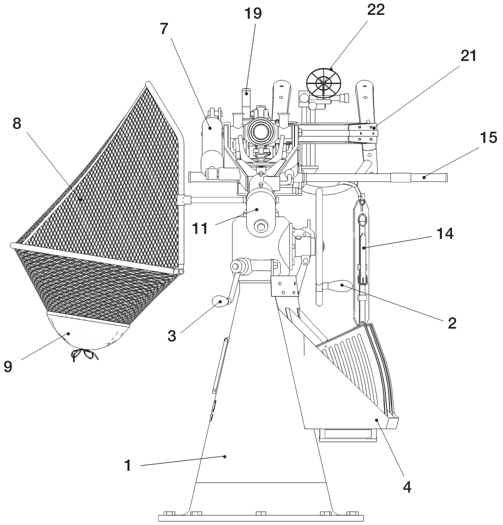

E5/5

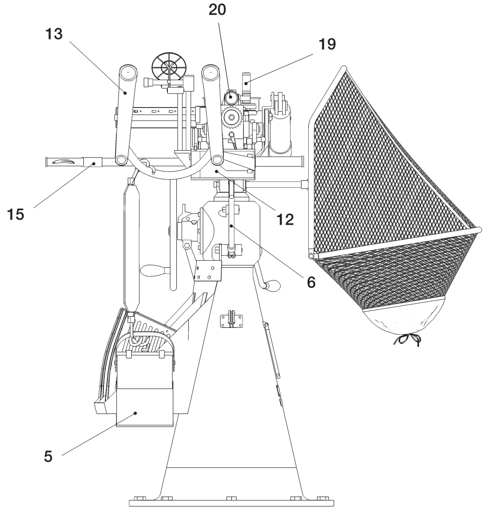

E5/6

2CM C/30 GUN (1/12.5 SCALE)

E5/8 RIGHT PROFILE
E5/9 LEFT PROFILE
E5/10 FRONT VIEW
E5/11 BACK VIEW
E5/12 PLAN

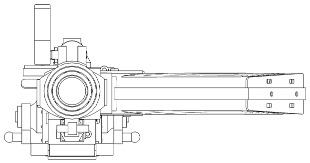
E5/10

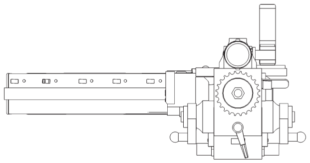
E5/11

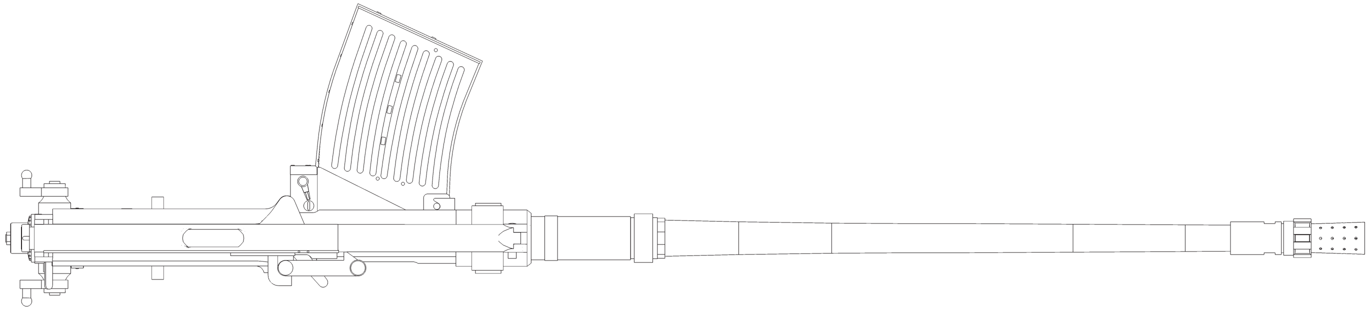
E5/12

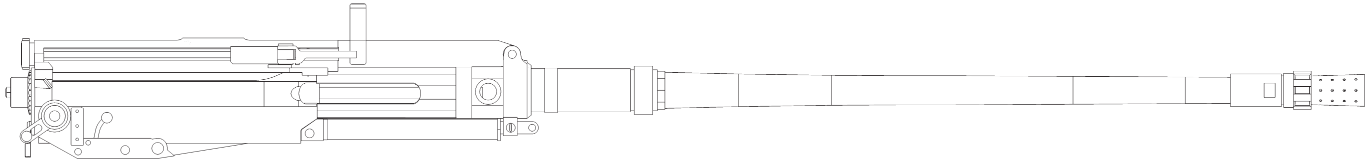
E5/8

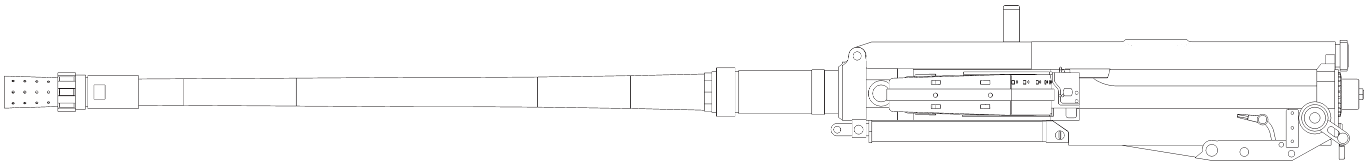
E5/9

2CM C/38 GUN IN THE SL C/30 SINGLE MOUNT, FROM JANUARY 1941 (1/25 SCALE)

E5/13 RIGHT PROFILE (STOWED POSITION)
E5/14 LEFT PROFILE (COMBAT POSITION)
E5/15 FRONT VIEW
E5/16 PLAN

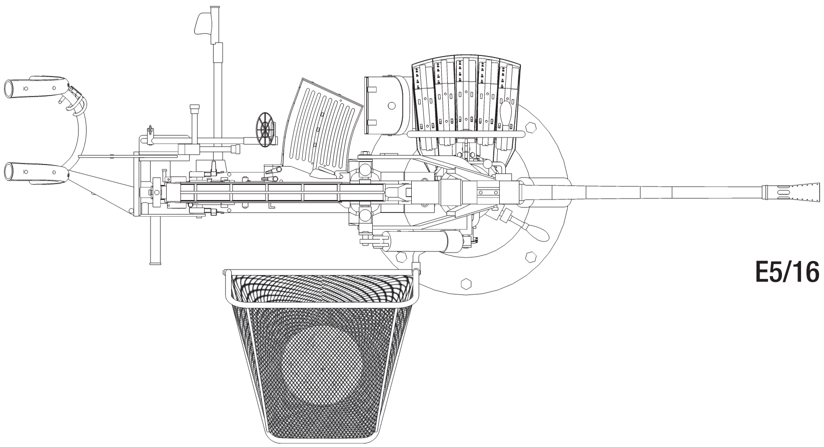

E5/16

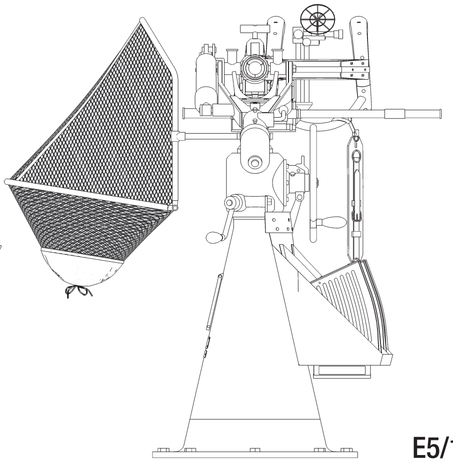

E5/15

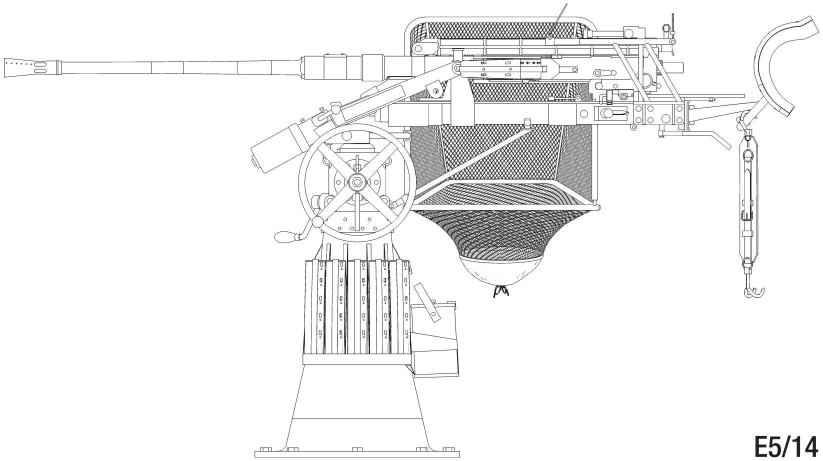

E5/14

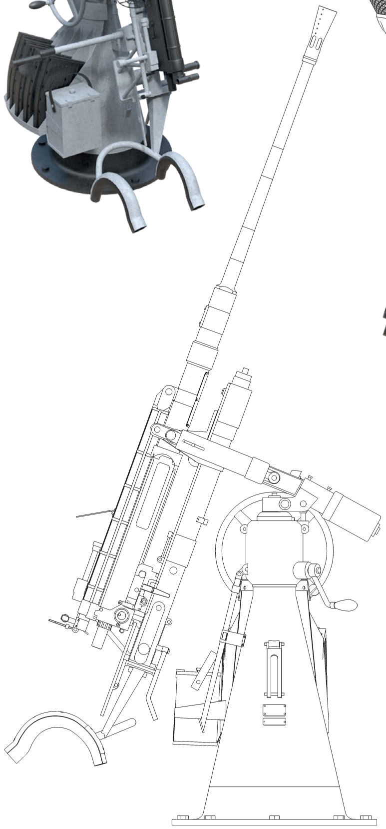

E5/13

2CM C/38 GUN (1/12.5 SCALE)

E5/17 RIGHT PROFILE
E5/18 LEFT PROFILE
E5/19 FRONT VIEW
E5/20 BACK VIEW
E5/21 PLAN

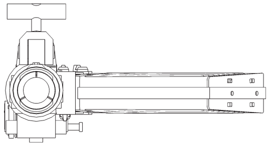

E5/19

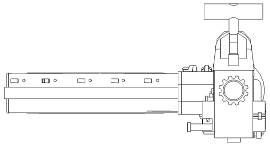

E5/20

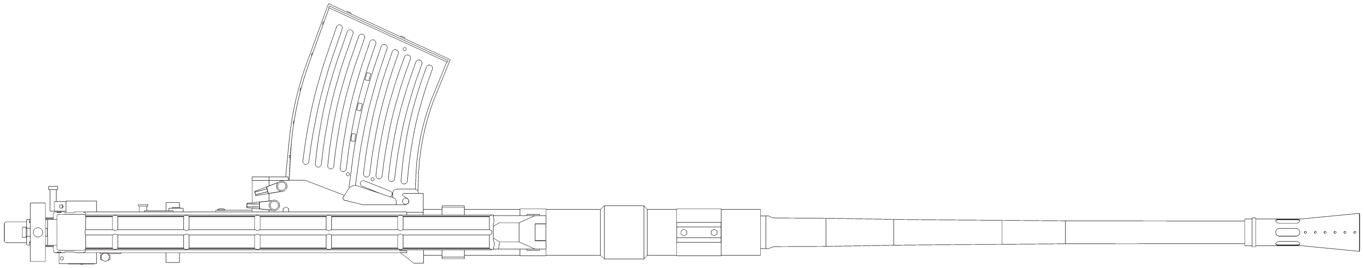

E5/21

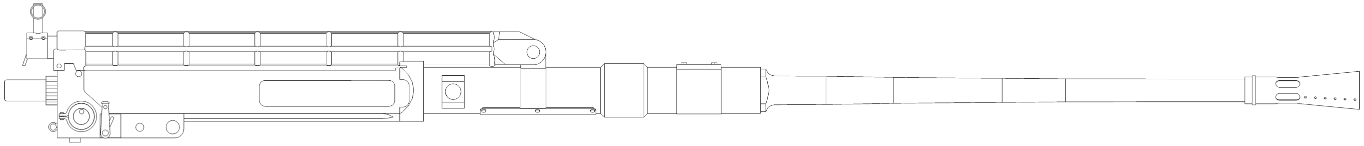

E5/17

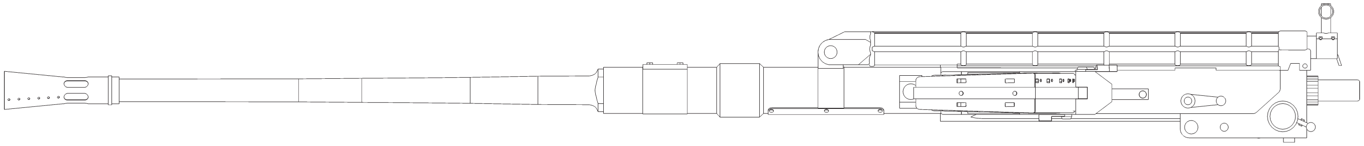

E5/18

2CM C/38 GUNS IN THE TRIAXIALLY STABILISED *VIERLING* L C/38 QUADRUPLE MOUNT, FROM JANUARY 1941 (1/25 SCALE)

E5/22 RIGHT PROFILE

E5/22–26 2CM QUADRUPLE MOUNT

1 Mount pedestal
2 Trainer's seat
3 Pointer's seat
4 Cross-leveller's seat
5 Trainer's handwheel
6 Pointer's handwheel
7 Cross-leveller's handwheel
8 Ready-to-use ammunition rack for 9 magazines
9 Foot rest
10 Empty cases bin
11 Gun cradle
12 Firing pedal
13 Flash guard
14 Gun barrel
15 Breech cover
16 Ammunition magazine for 20 rounds
17 Recoil cylinder
18 Rod for connecting sight arm and gun cradle
19 Cross-leveller's sight
20 Sight carriage bar
21 Trainer's sight (*Reflexvisier*)
22 Pointer's sight (*Reflexvisier*)
23 Counterweight

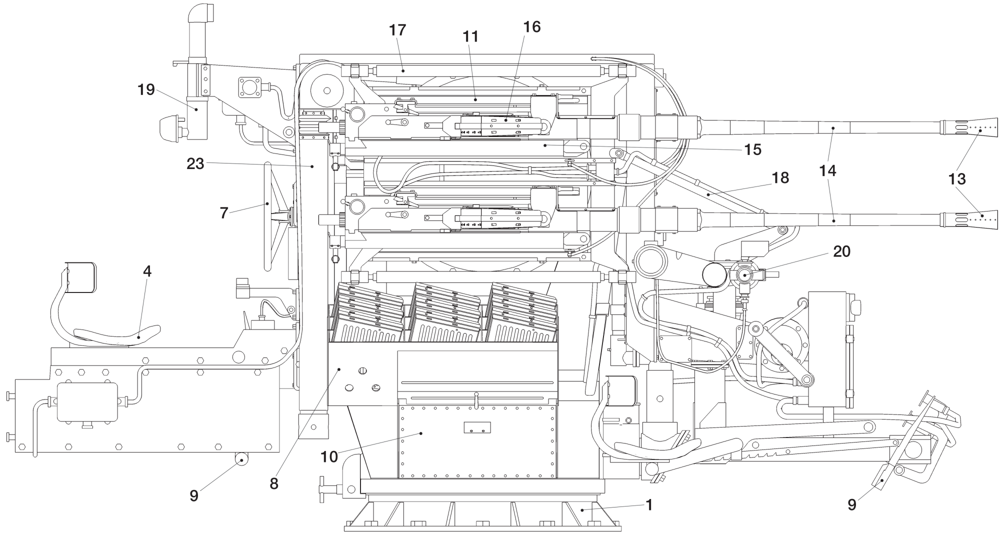

E5/22

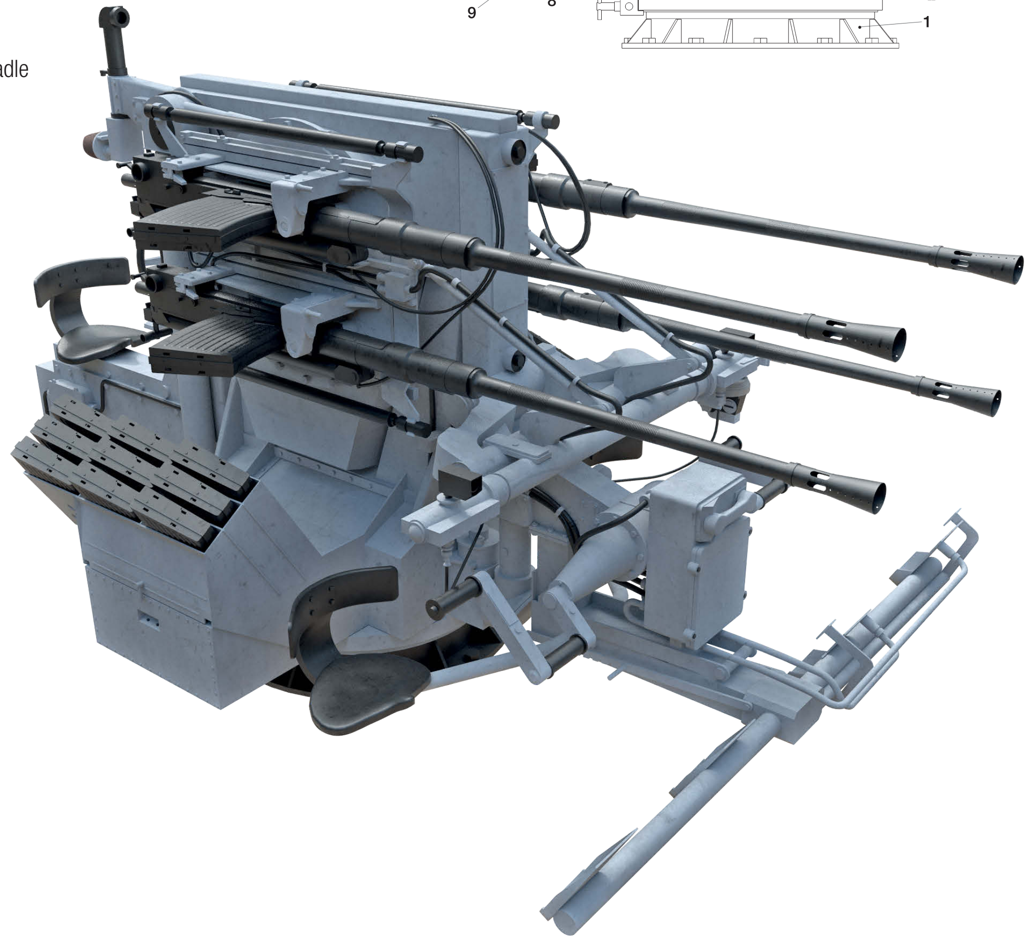

2CM C/38 GUNS IN THE TRIAXIALLY STABILISED *VIERLING* L C/38 QUADRUPLE MOUNT, FROM JANUARY 1941 (1/25 SCALE)

E5/23 LEFT PROFILE

E5/24 FRONT VIEW

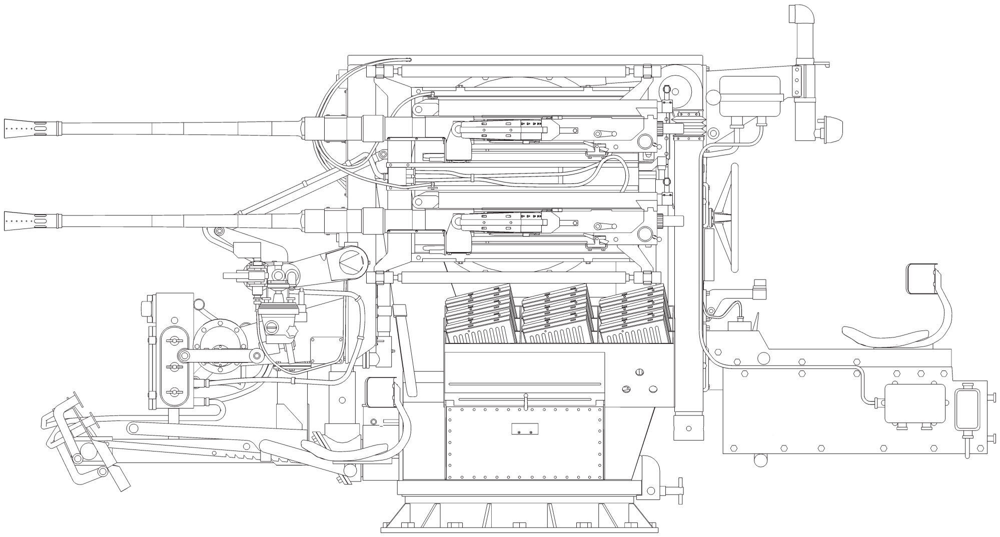

E5/23

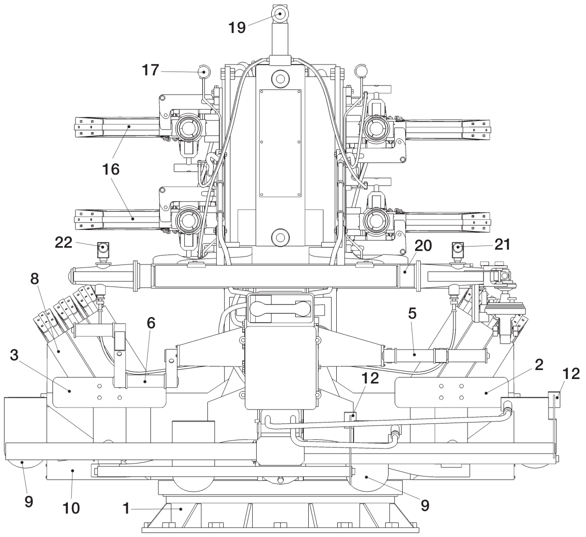

E5/24

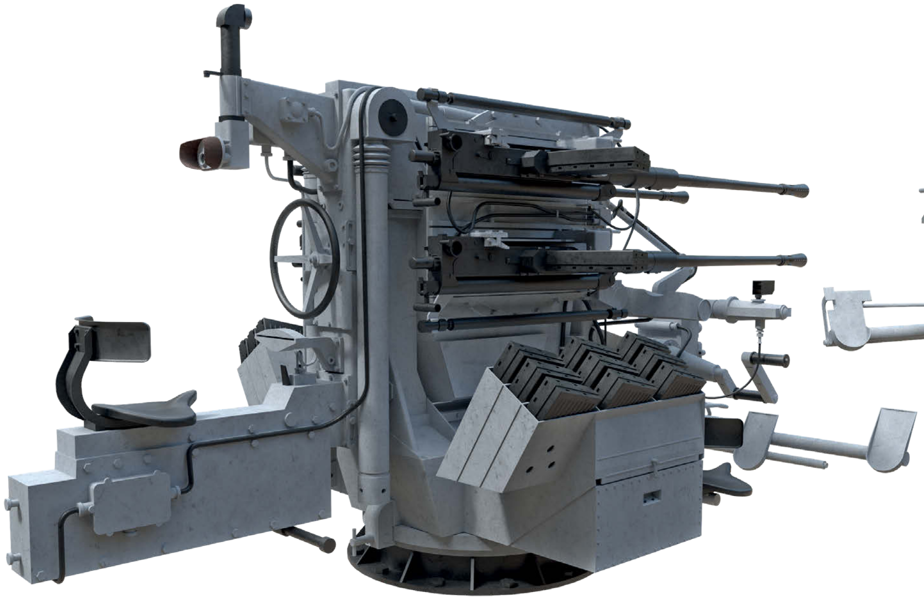

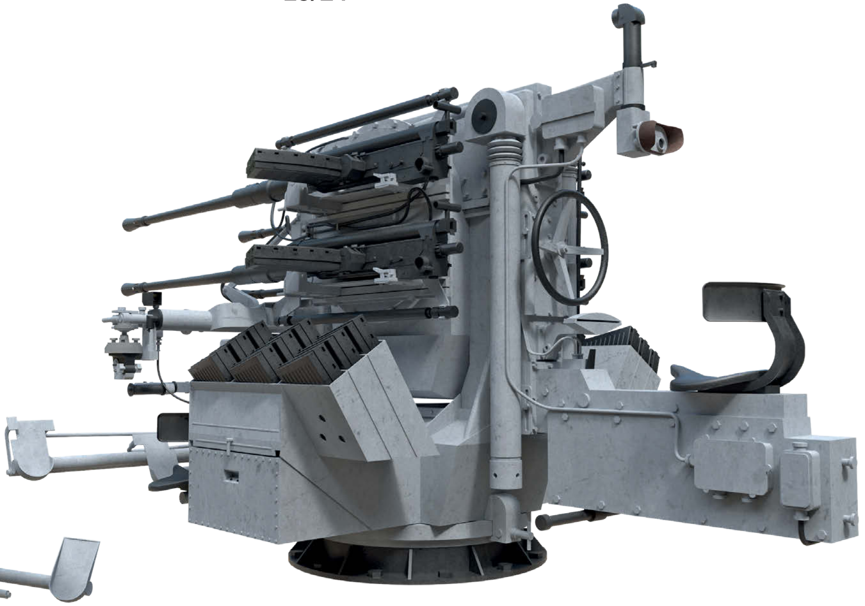

E5/25 BACK VIEW
E5/26 PLAN

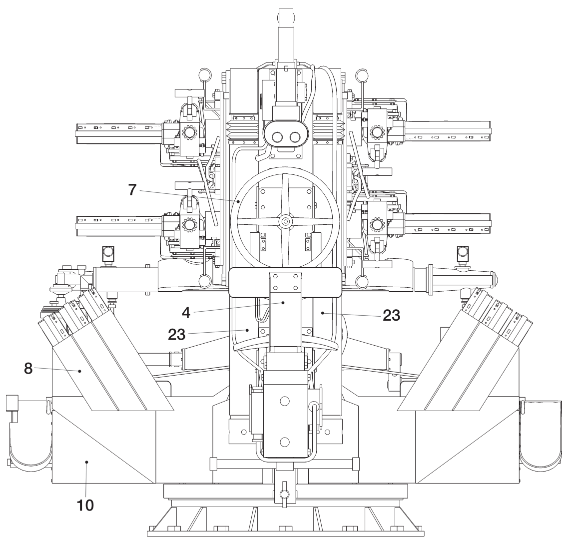

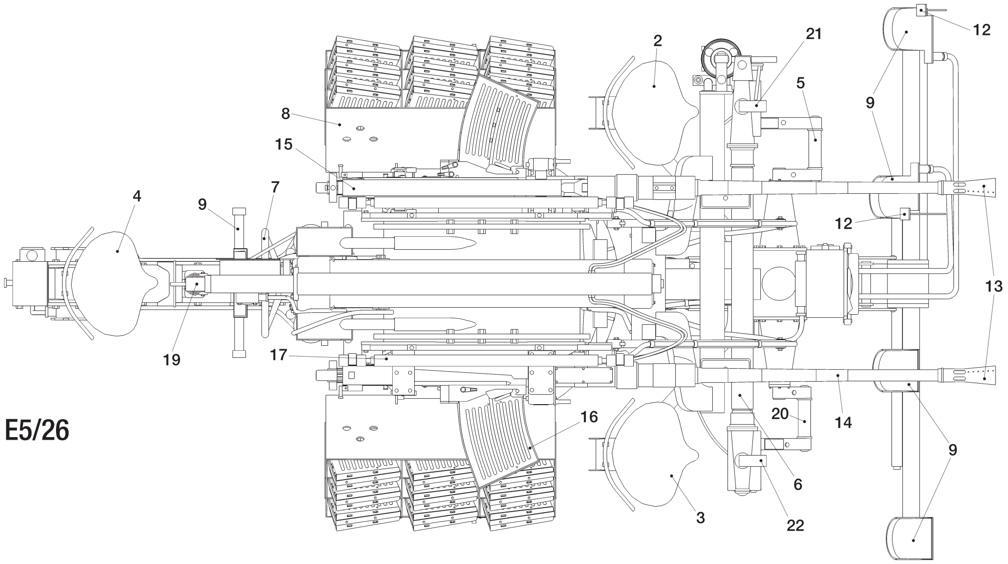

E5/26

E5/25

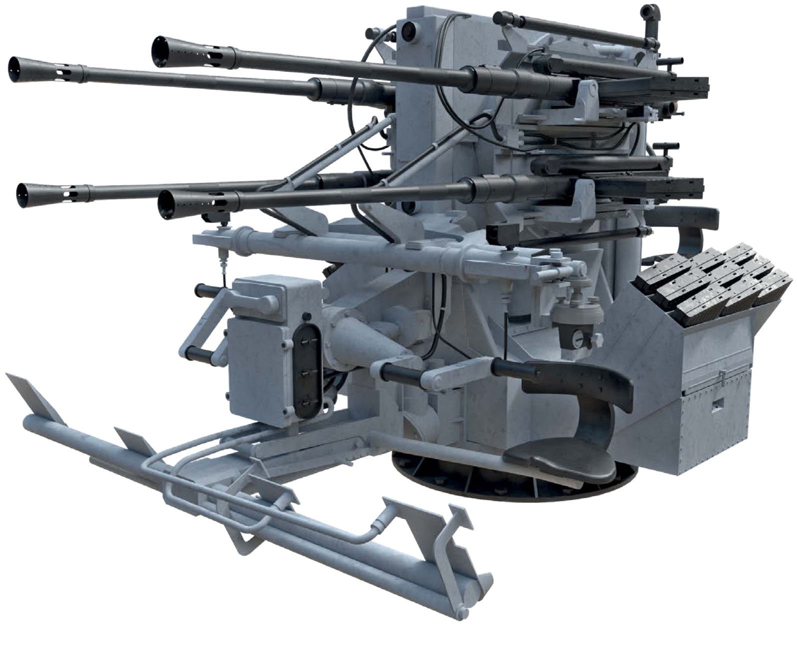

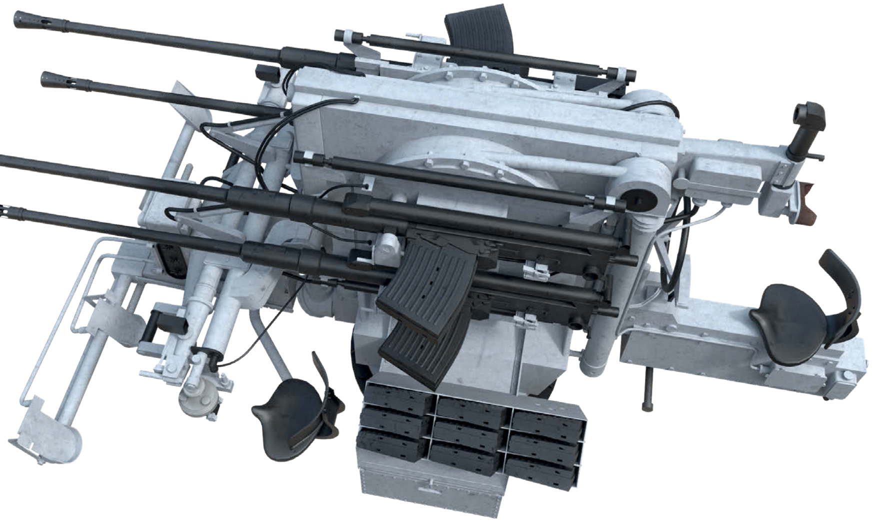

2CM C/38 GUNS IN THE BIAXIALLY STABILISED *VIERLING* L C/38 QUADRUPLE MOUNT, FROM EARLY 1942 (1/25 SCALE)

E5/27 RIGHT PROFILE
E5/28 LEFT PROFILE
E5/29 FRONT VIEW
E5/30 BACK VIEW

E5/27–31 2CM QUADRUPLE MOUNT

1 Mount pedestal
2 Elevation handwheel
3 Train handwheel
4 Ready-to-use ammunition rack for 4 magazines
5 Compensator
6 Empty cases bin
7 Gun cradle
8 Gunner's seat
9 Foot rest and firing pedal
10 Loader's seat
11 Loader's platform
12 Traveling lock
13 Flash guard
14 Gun barrel
15 Breech cover
16 Ammunition magazine for 20 rounds
17 Recoil cylinder
18 Gun carriage
19 Rod for connecting sight arm and gun cradle
20 Sight arm
21 Sight (*Linealvisier* 21)

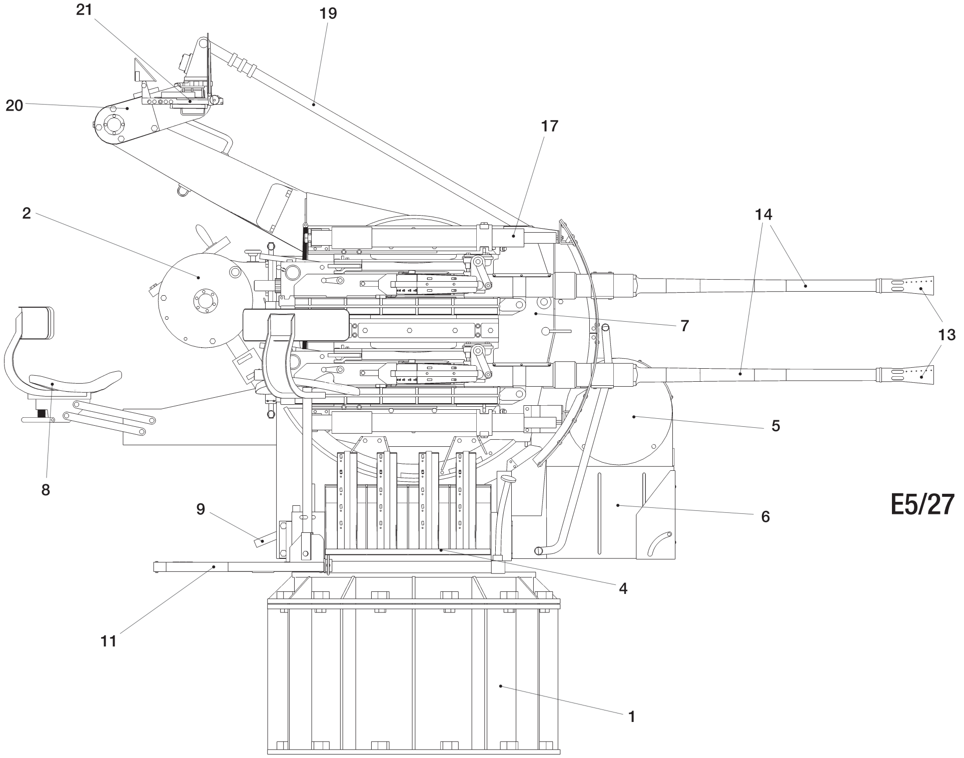

E5/27

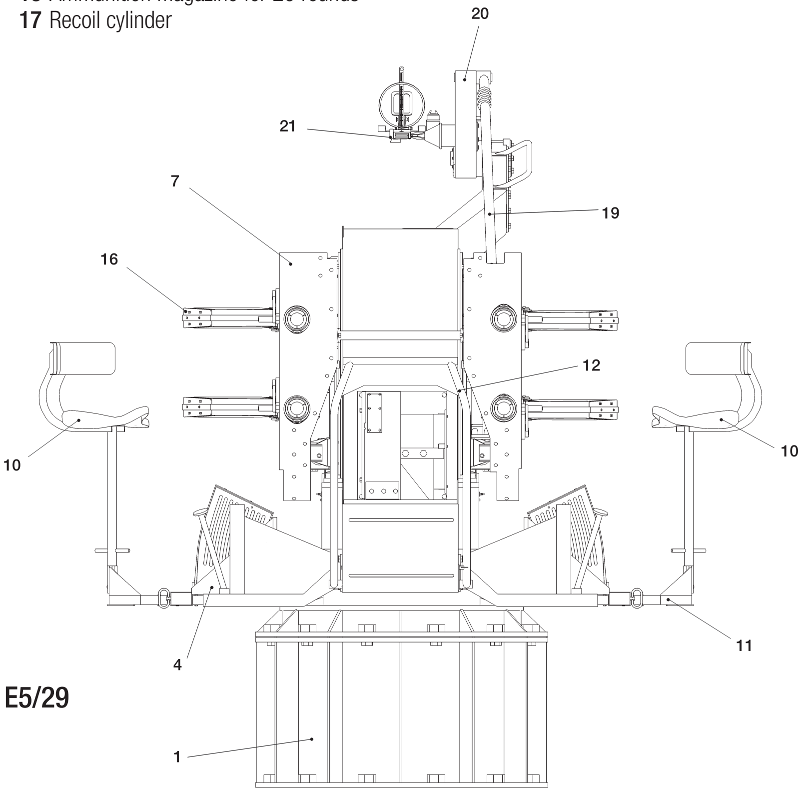

E5/29

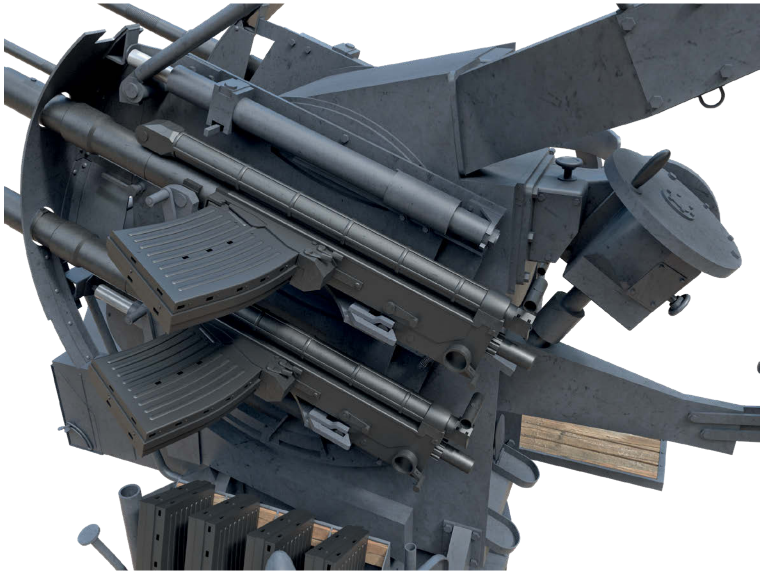

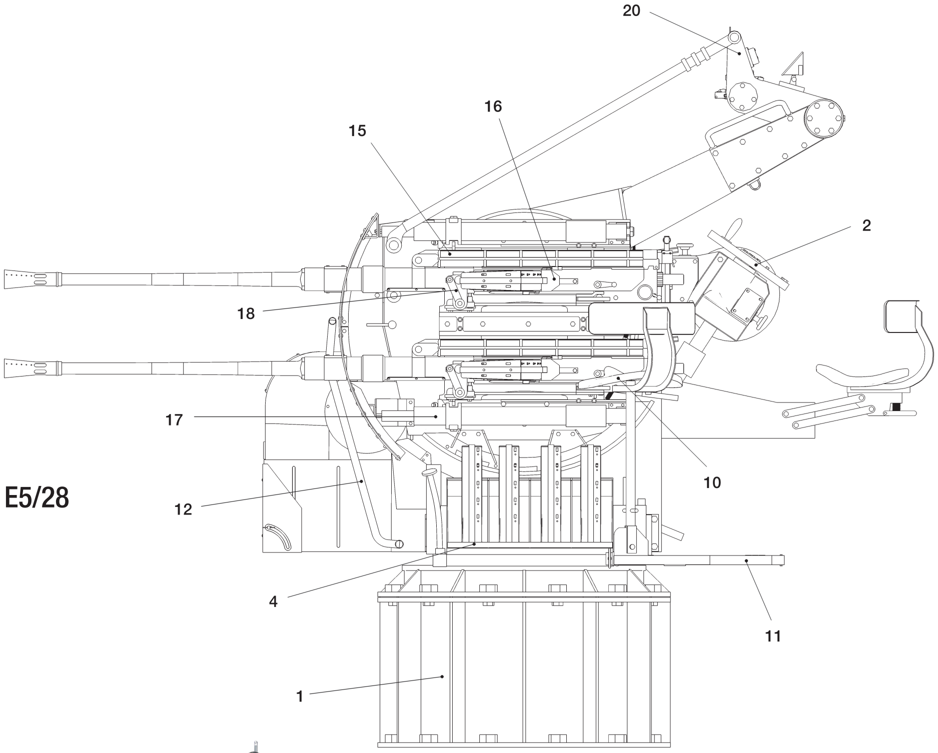

E5/28

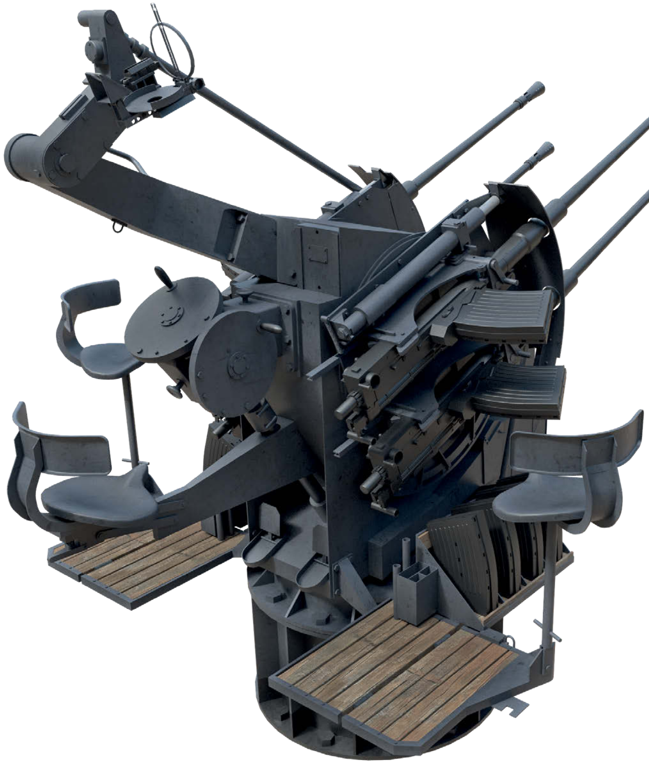

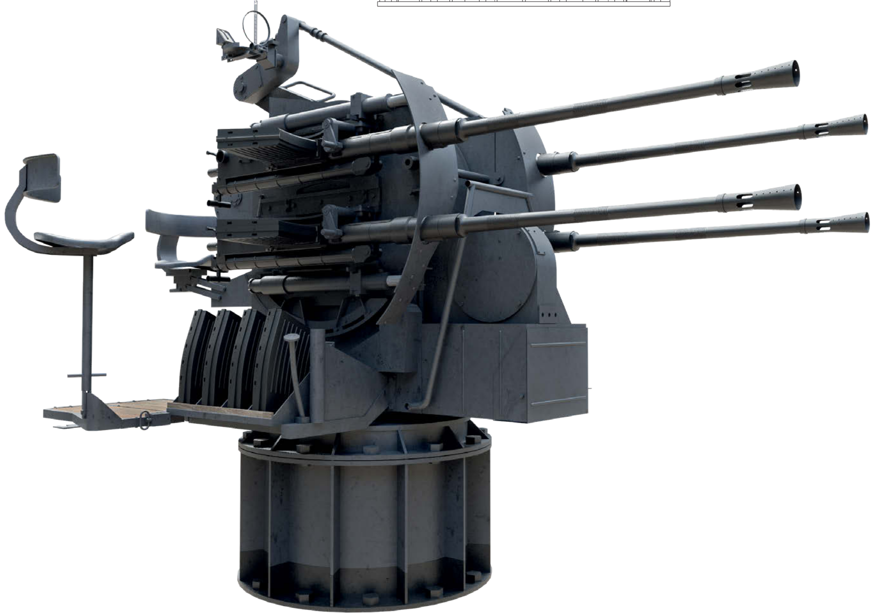

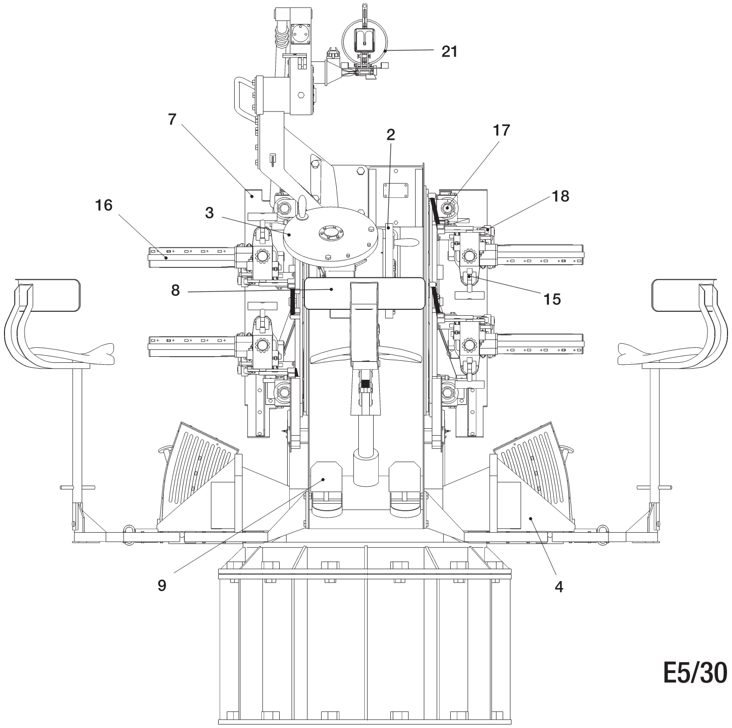

E5/30

2CM C/38 GUNS IN THE BIAXIALLY STABILISED *VIERLING* L C/38 QUADRUPLE MOUNT, FROM EARLY 1942 (1/25 SCALE)

E5/31 PLAN

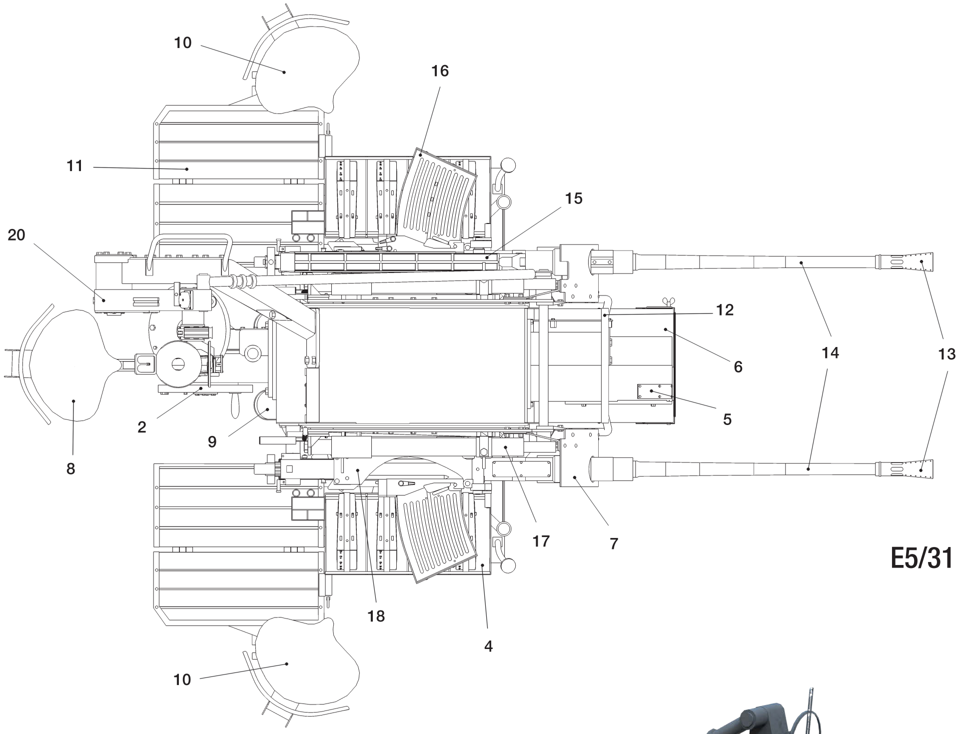

E5/31

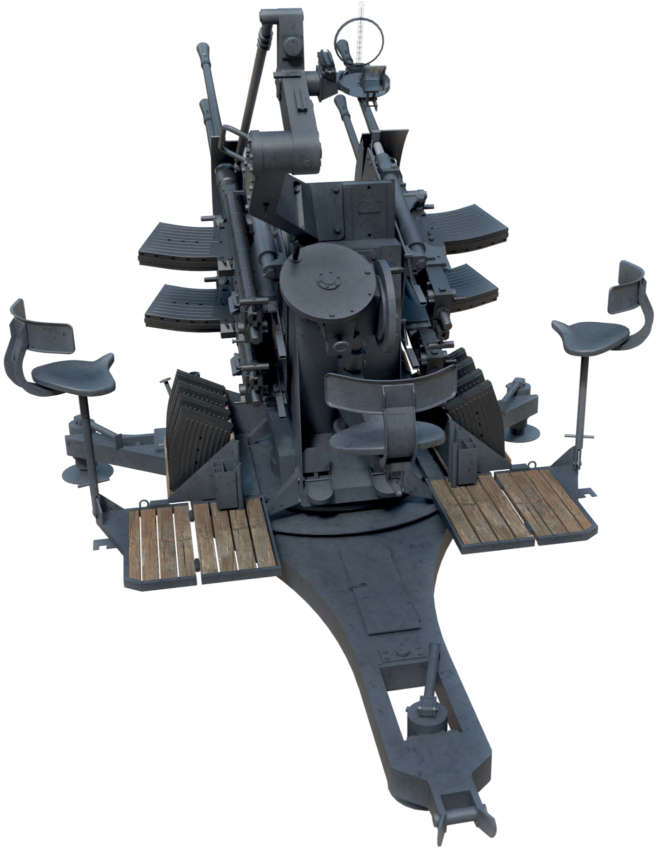

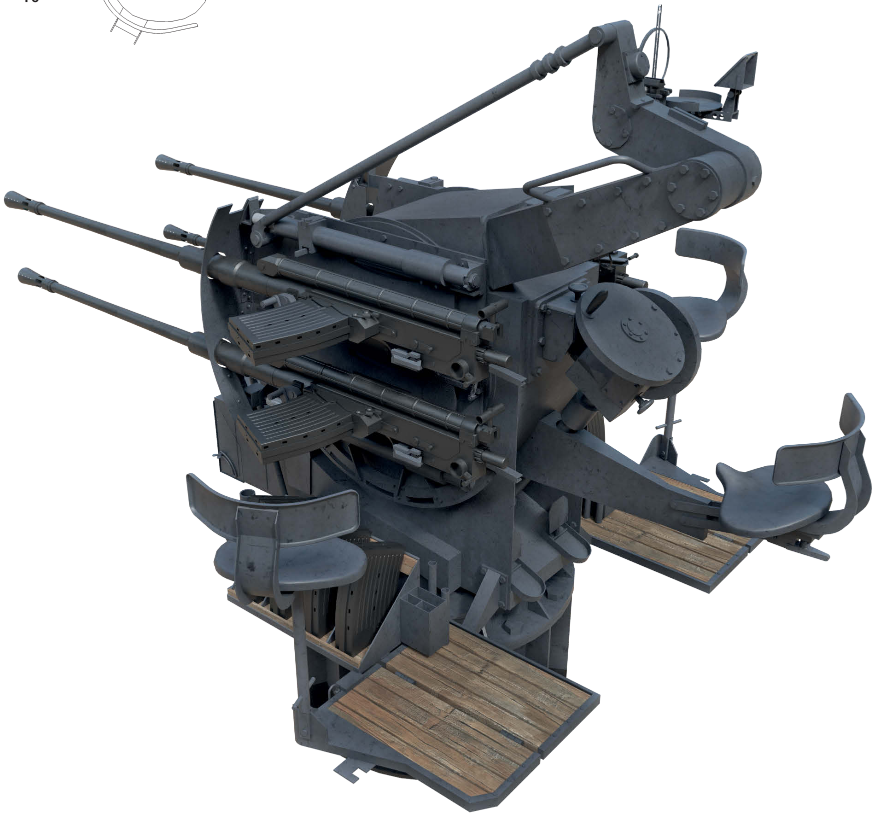

2CM C/38 GUNS IN THE BIAXIALLY STABILISED *VIERLING* L C/38 QUADRUPLE MOUNT ON AN ARMY-TYPE TRIPOD BASE, ONLY THE TEMPORARY POSITION ON ROOF OF TURRET B IN EARLY 1942 (1/25 SCALE)

E5/32 RIGHT PROFILE

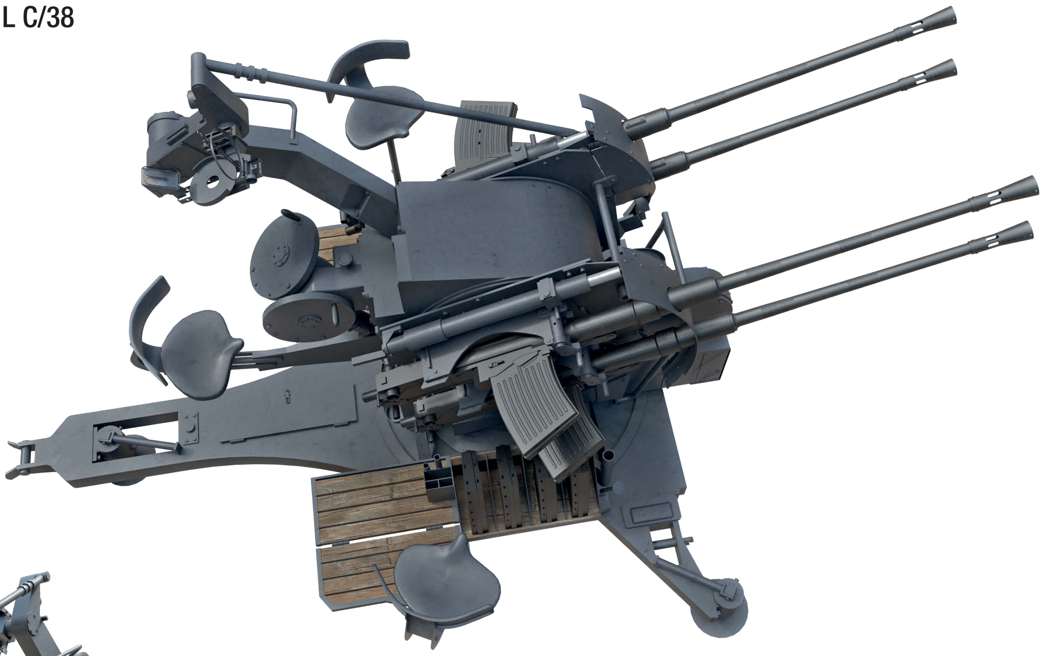

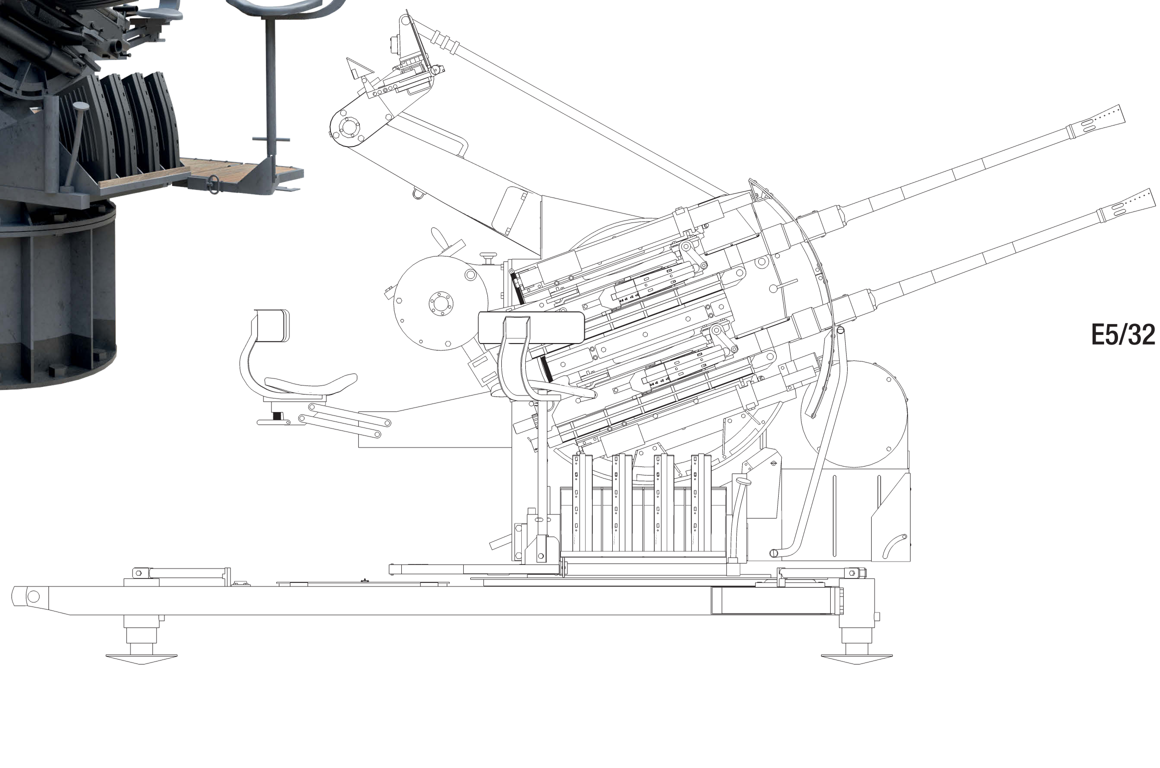

E5/32

2CM C/38 GUNS IN THE BIAXIALLY STABILISED *VIERLING* L C/38 QUADRUPLE MOUNT ON AN ARMY-TYPE TRIPOD BASE, ONLY THE TEMPORARY POSITION ON ROOF OF TURRET B IN EARLY 1942 (1/25 SCALE)

E5/33 FRONT VIEW

E5/34 PLAN

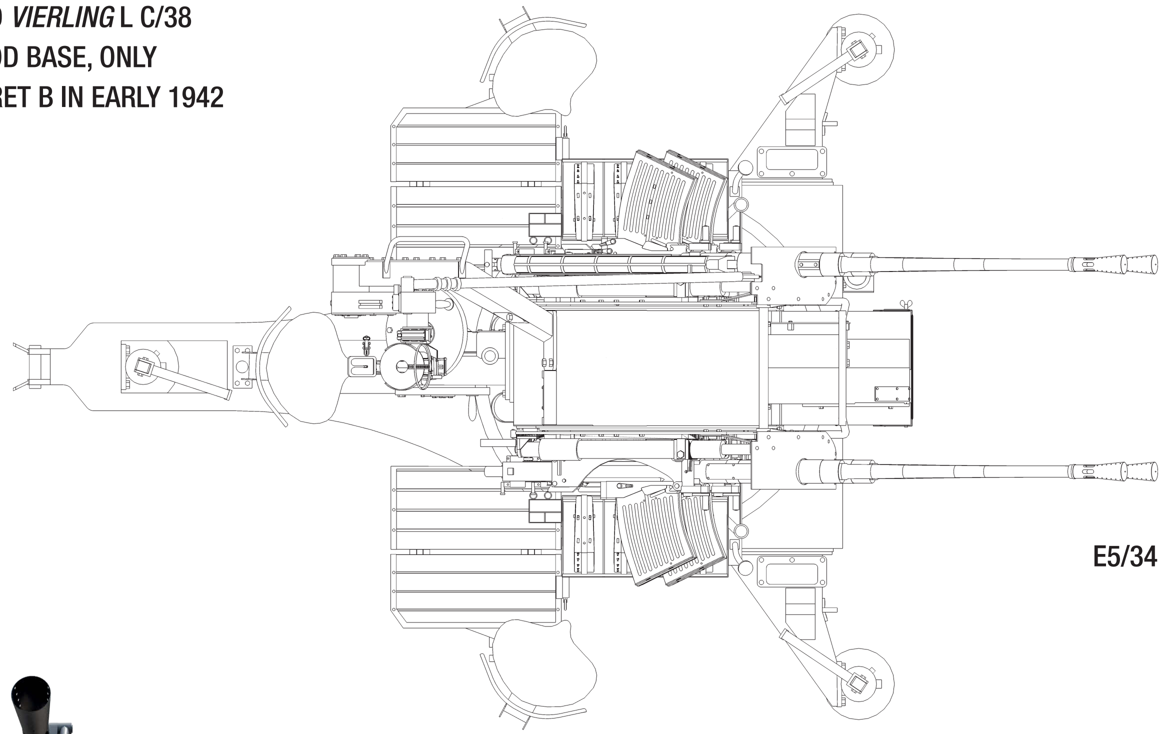

E5/34

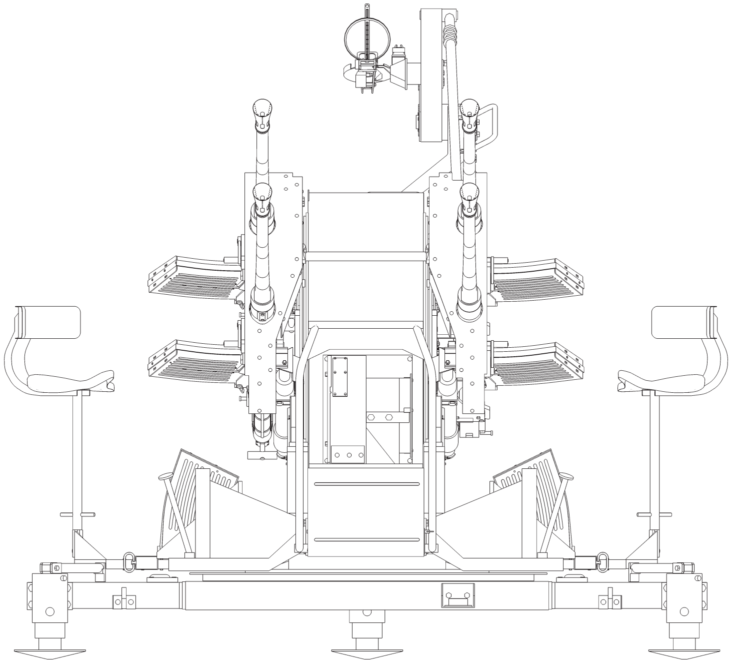

E5/33

E5/35 LOCATION OF 2CM MOUNTS 1939–1940 (10 SINGLE MOUNTS) – PLAN (1/1200 SCALE)
E5/36 LOCATION OF 2CM MOUNTS IN 1941 (10 SINGLE MOUNTS, 2 TRIAXIALLY STABILISED QUADRUPLE MOUNTS) – PLAN (1/1200 SCALE)
E5/37 LOCATION OF 2CM MOUNTS IN FEBRUARY 1942 (10 SINGLE MOUNTS, 2 TRIAXIALLY STABILISED QUADRUPLE MOUNTS AND 4 BIAXIALLY STABILISED QUADRUPLE MOUNTS) – PLAN (1/1200 SCALE)
E5/38 LOCATION OF 2CM MOUNTS MID-1942–1943 (10 SINGLE MOUNTS, 2 TRIAXIALLY STABILISED QUADRUPLE MOUNTS AND 3 BIAXIALLY STABILISED QUADRUPLE MOUNTS) – PLAN (1/1200 SCALE)

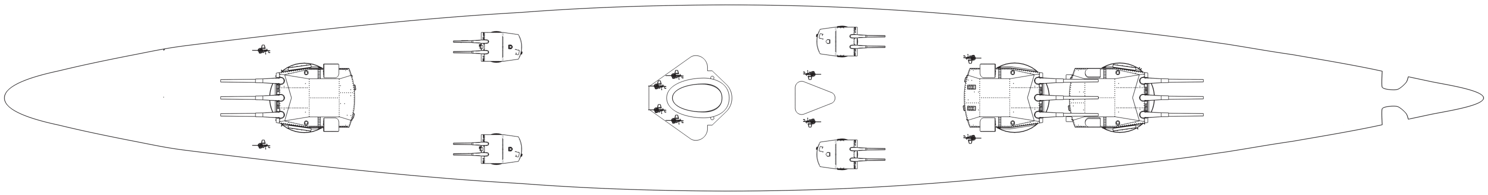

E5/35

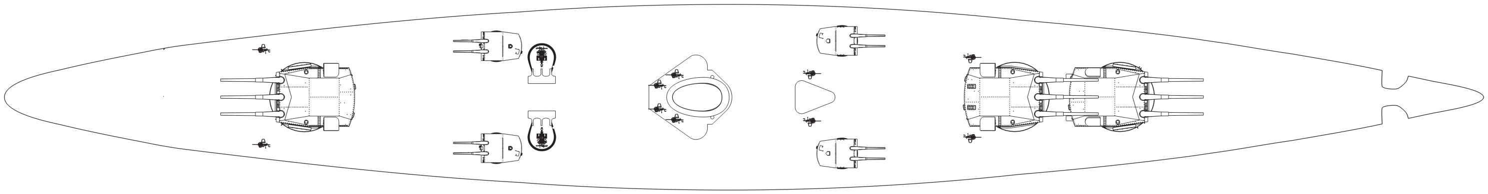

E5/36

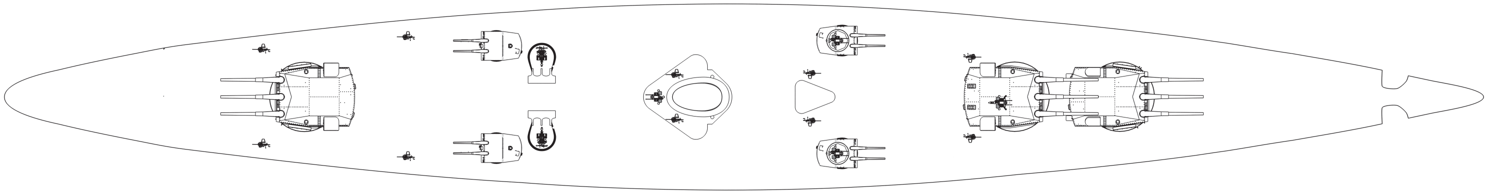

E5/37

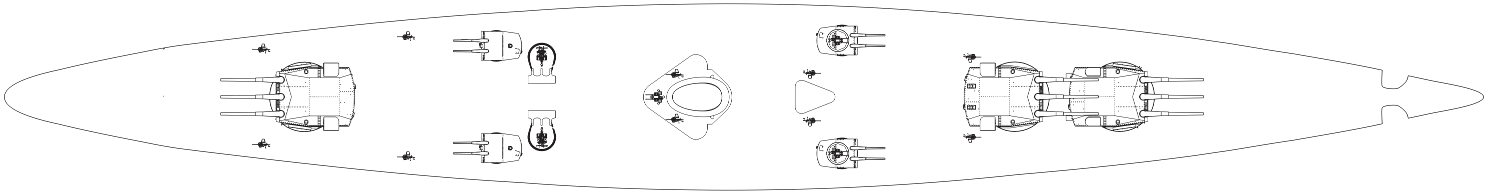

E5/38

STARBOARD SIDE TRIPLE 53.3CM TORPEDO TUBE MOUNT AS ORIGINALLY FITTED IN THE SUMMER OF 1941 (1/50 SCALE)

E6/1 RIGHT PROFILE

E6/2 LEFT PROFILE

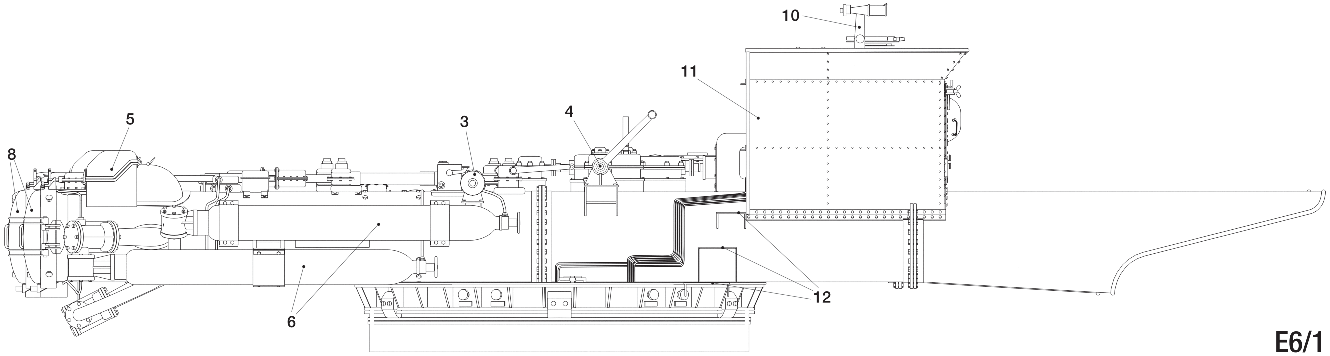

E6/1

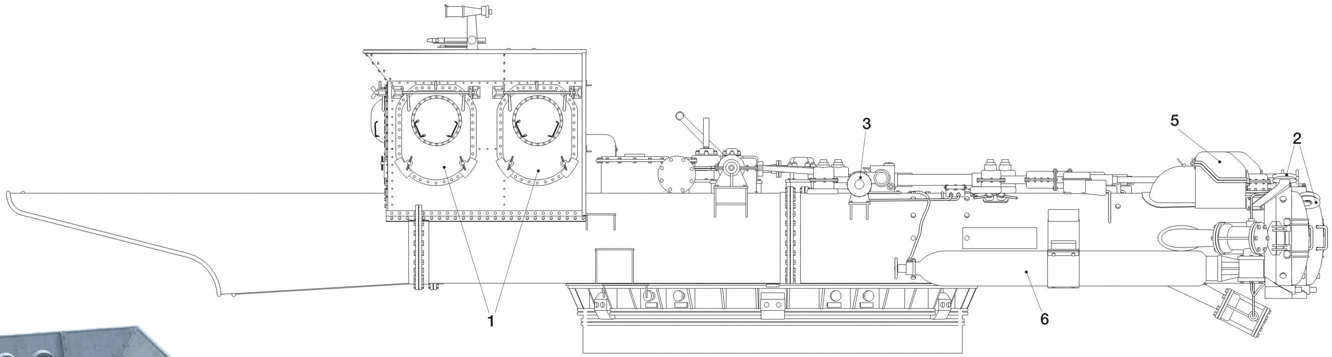

E6/2

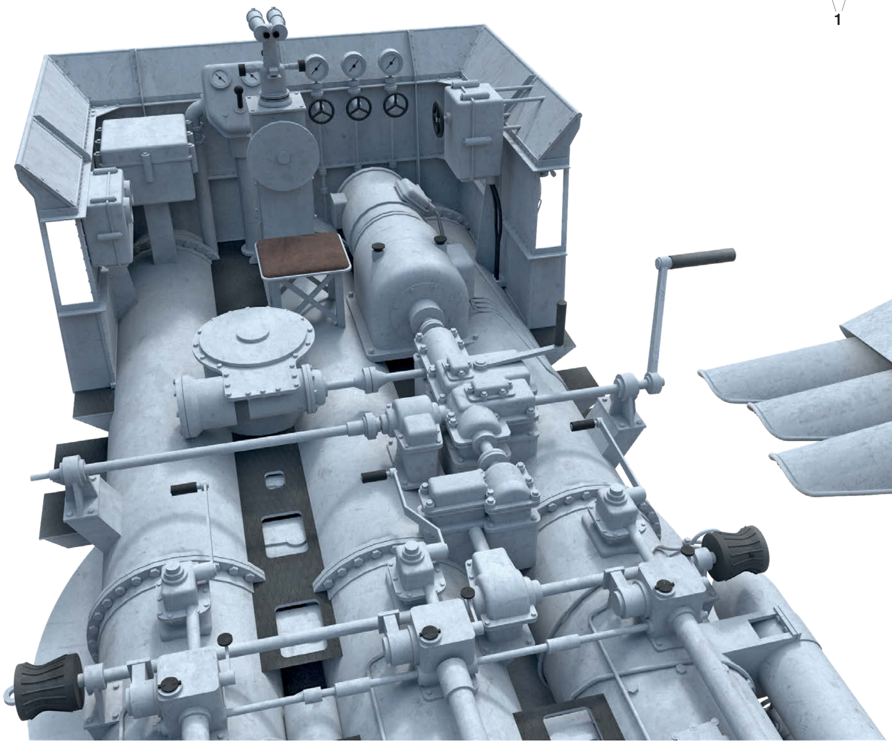

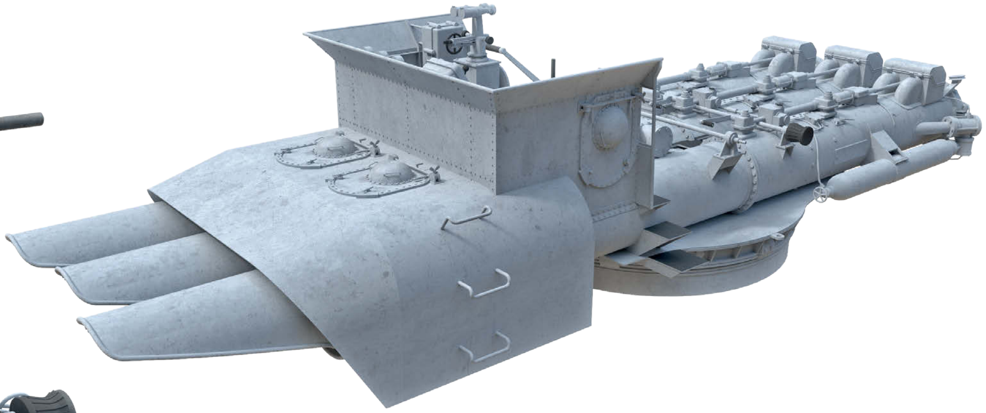

E6/3 FRONT VIEW
E6/4 BACK VIEW
E6/5 PLAN

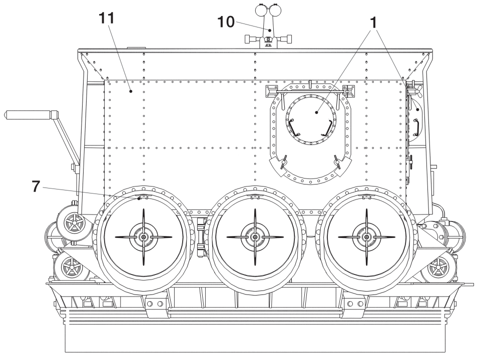

E6/3

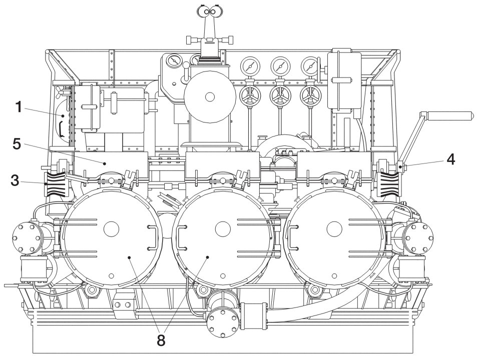

E6/4

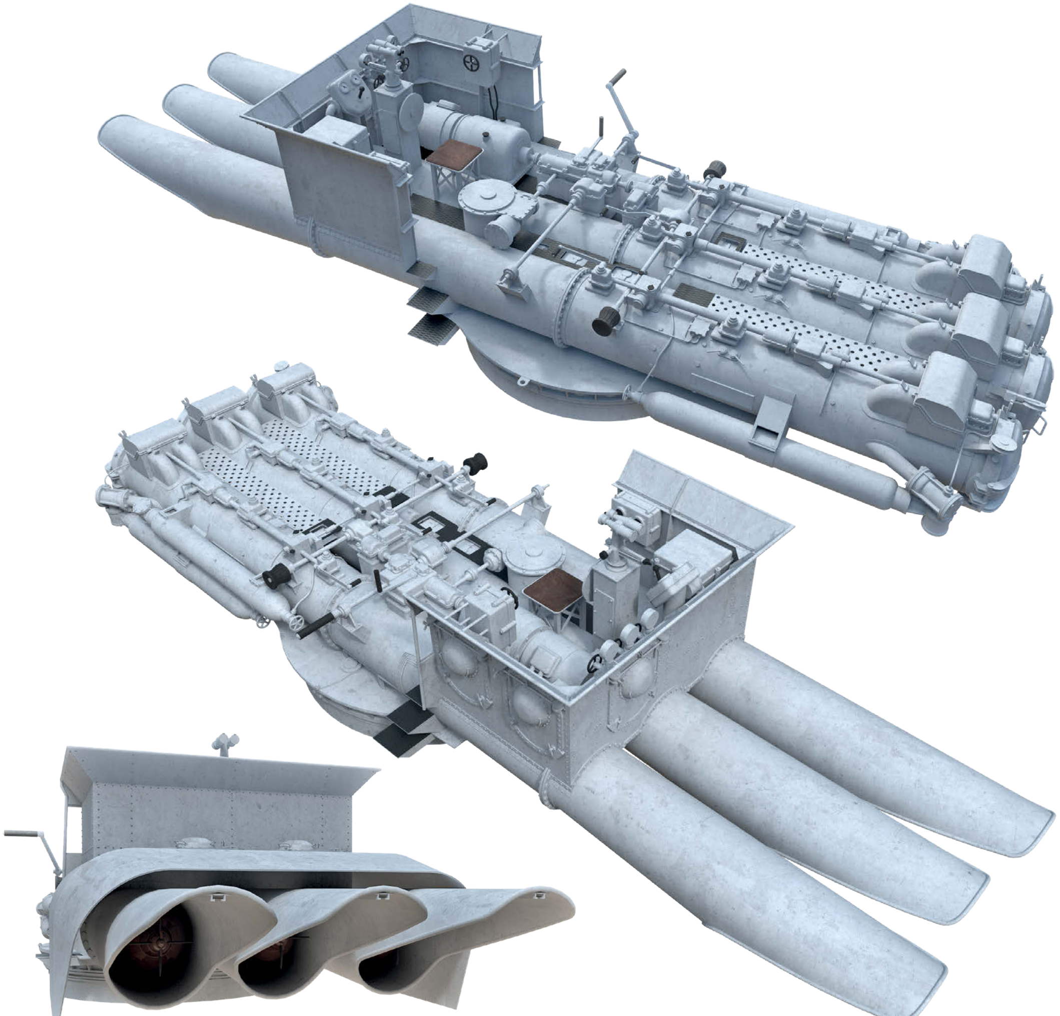

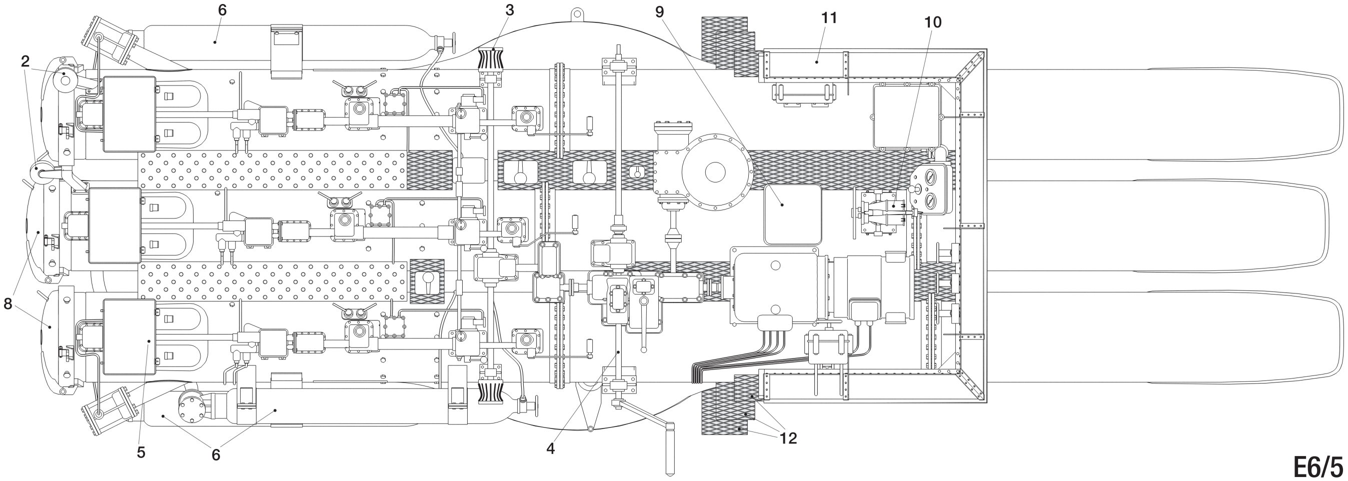

E6/5

STARBOARD SIDE TRIPLE 53.3CM TORPEDO TUBE MOUNT AFTER MODIFICATION IN THE SECOND HALF OF 1941 (1/50 SCALE)

E6/6 RIGHT PROFILE (FRAGMENT)
E6/7 LEFT PROFILE (FRAGMENT)
E6/8 FRONT VIEW (FRAGMENT)
E6/9 PLAN (FRAGMENT)

E6/1–9 TRIPLE 53.3CM TORPEDO TUBE MOUNT

1 Stowed torpedo tube cover (on opposite side on port side mount)
2 Torpedo loading pulley
3 Torpedo loading capstan
4 Crank-driven shaft
5 Powder ejector
6 Compressed air bottle
7 Torpedo launching rail
8 Tube breech door
9 Aimer's seat
10 Torpedo sight
11 Crew's shield
12 Foot step
13 Additional warhead shield (fitted in the second half of 1941)

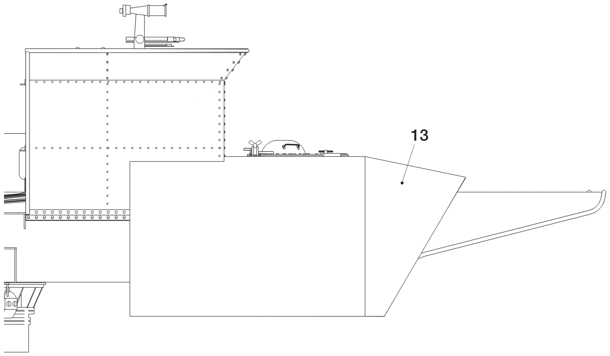

E6/6

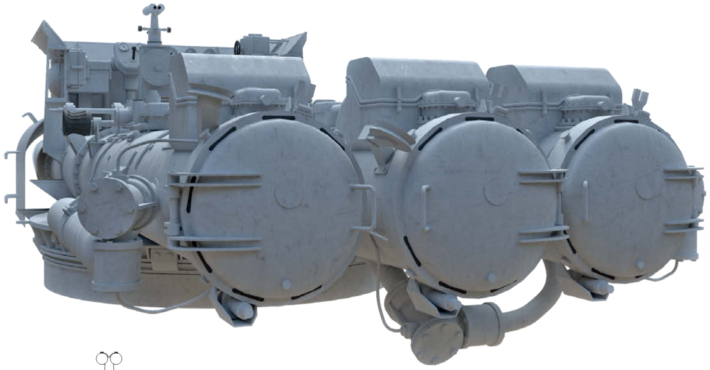

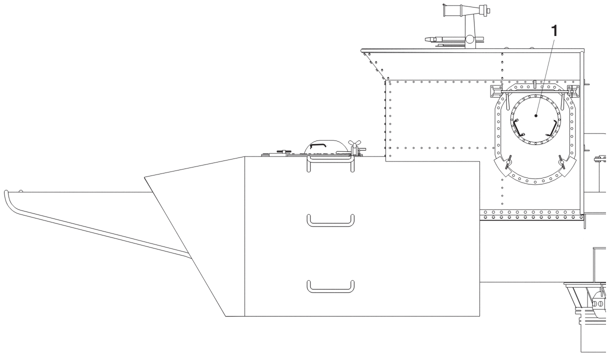

E6/7

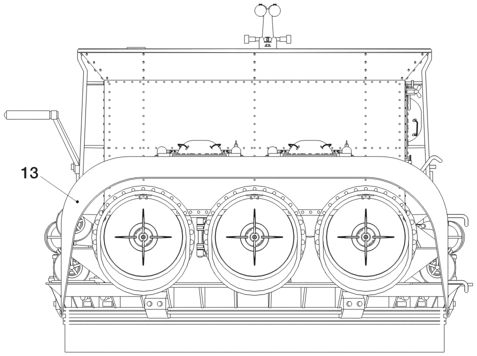

E6/8

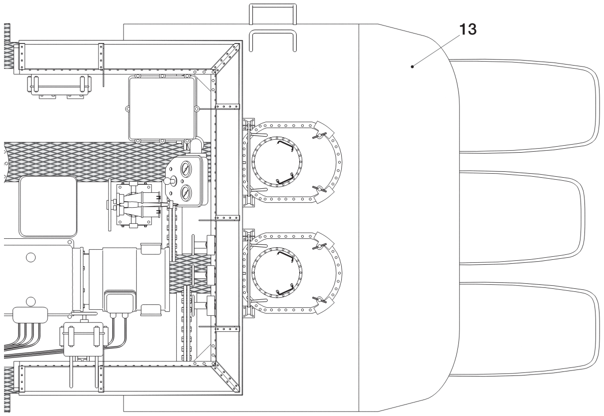

E6/9

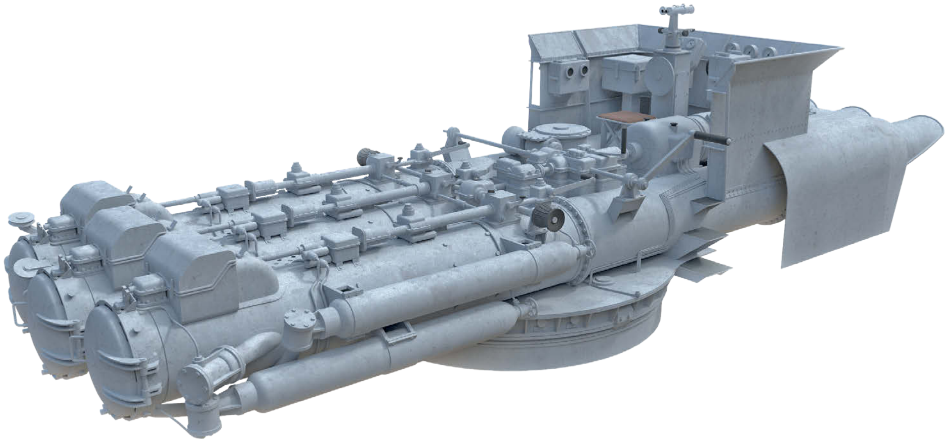

E6/10 53.3CM TORPEDO G7A – PROFILE (1/50 SCALE)

1 Combat pistol
2 Warhead
3 Hanging stud
4 Air flask
5 Water chamber
6 Engine chamber
7 Aft section
8 Tail section
9 Contra-rotating propellers

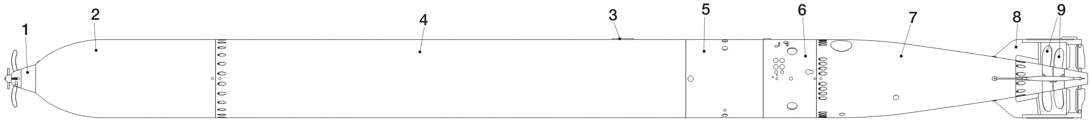

E6/10

WBD DEPTH CHARGE (1/25 SCALE)

E6/11 FRONT VIEW

E6/12 BACK VIEW

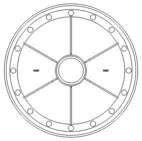

E6/11

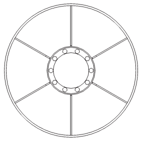

E6/12

WBD DEPTH CHARGE RACK, JANUARY 1941–MID-1942 (1/25 SCALE)

E6/13 RIGHT PROFILE

E6/14 LEFT PROFILE

E6/15 FRONT VIEW

E6/16 BACK VIEW

E6/17 PLAN

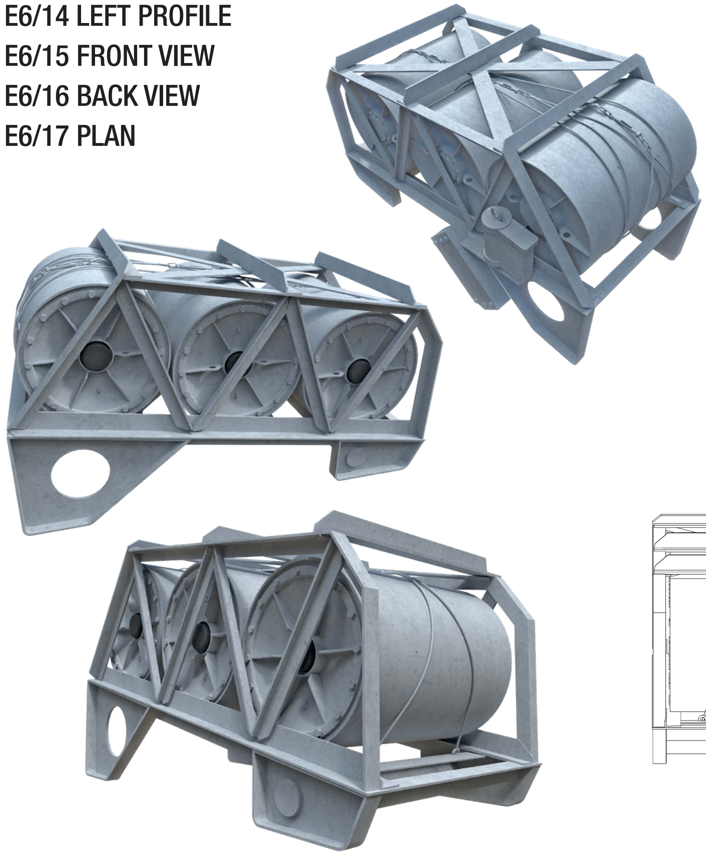

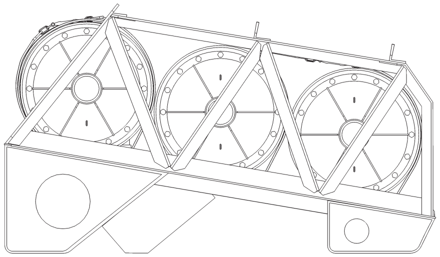

E6/13

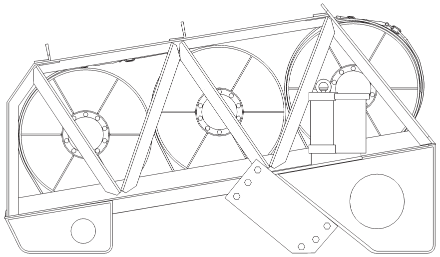

E6/14

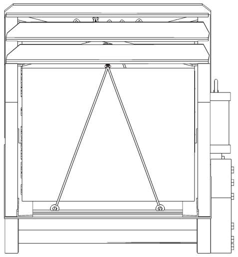

E6/15

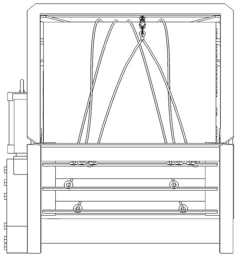

E6/16

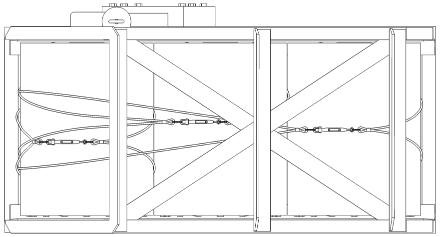

E6/17

10.5M RANGEFINDER DOME ON TOP OF MAIN FIRE CONTROL POST (1/75 SCALE)

F1/1 RIGHT PROFILE, EARLY 1939
F1/2 FRONT VIEW, EARLY 1939
F1/3 BACK VIEW, EARLY 1939
F1/4 PLAN, EARLY 1939

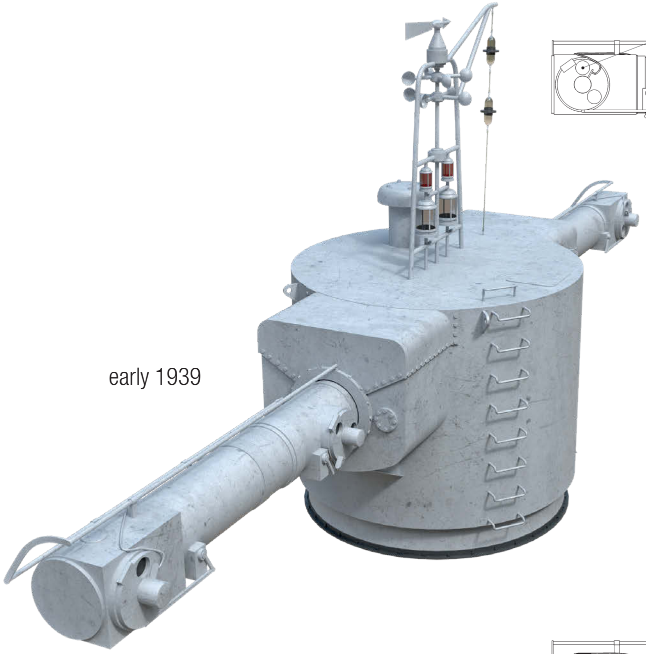

early 1939

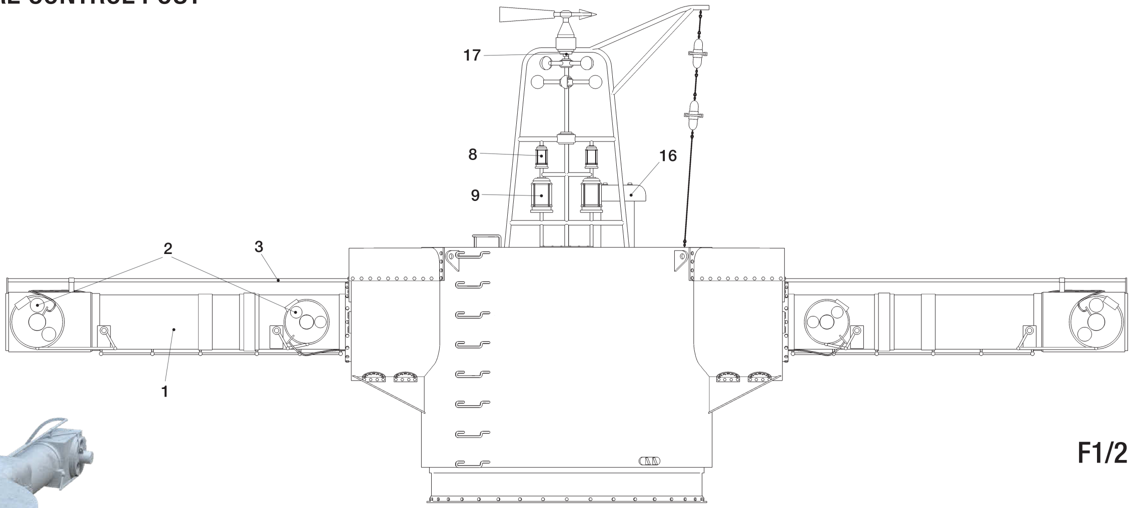

F1/2

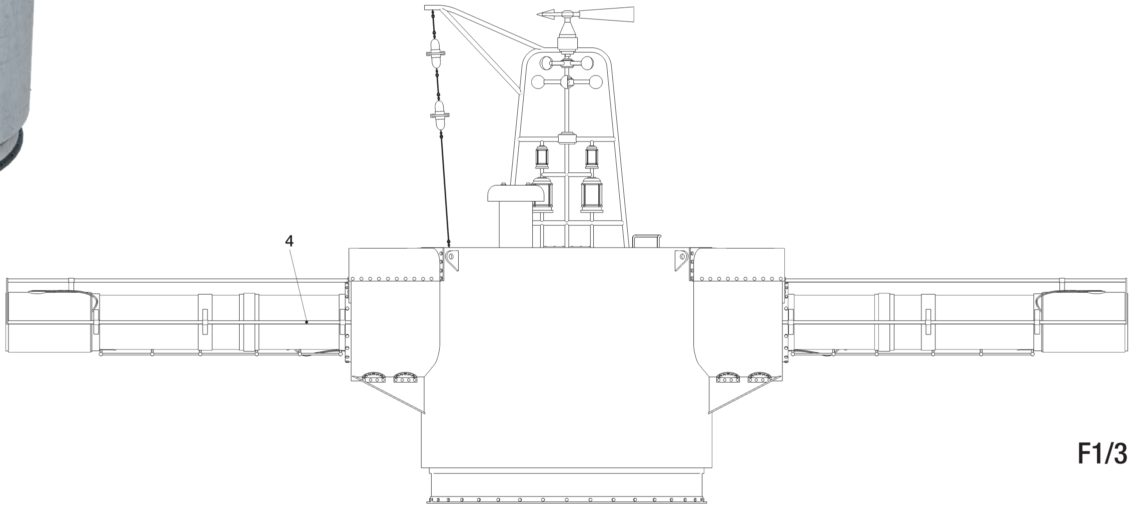

F1/3

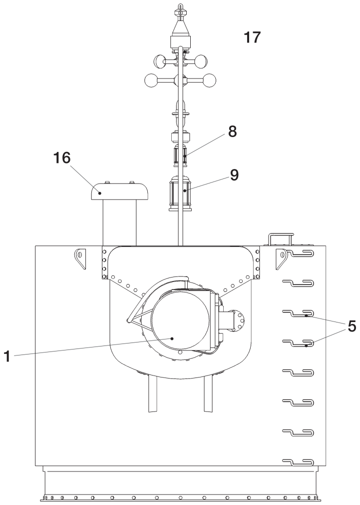

F1/1

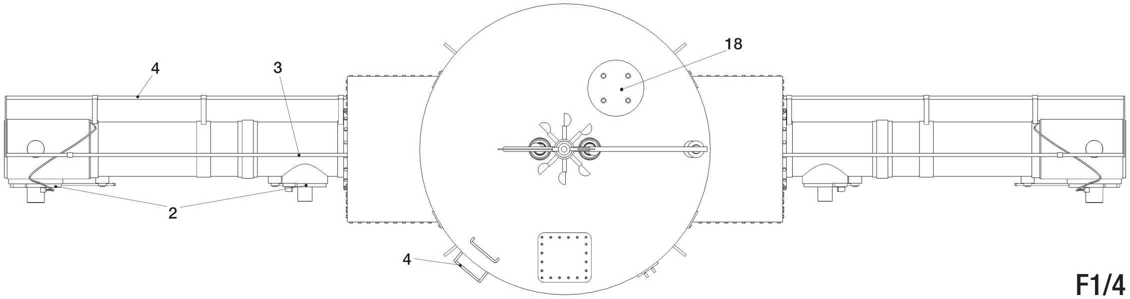

F1/4

F1/5 RIGHT PROFILE, LATE 1939
F1/6 FRONT VIEW, LATE 1939 (FRAGMENT)
F1/7 PLAN, LATE 1939 (FRAGMENT)

F1/1–21 10.5M RANGEFINDER DOME ON TOP OF MAIN FIRE CONTROL POST

1 Rangefinder arm
2 Optics
3 Handrail
4 Foot rail
5 Foot step
6 Ladder
7 Cooling installation
8 Red mooring manoeuvre light (relocated to foremast in mid-1942)
9 White top light (relocated to foremast in mid-1942)
10 FuMO 22 radar antenna (fitted in November 1939)
11 FuMO 27 radar antenna (FuMO 27 replaced FuMO 22 in January 1942, without a change in antenna form)
12 FuMB Ant 7 *Timor* passive detector antenna (added in January 1942 and relocated to front surface in mid-1942)
13 FuMO 26 radar antenna (replaced FuMO 27 and *Timor* antennas around October–November 1943)
14 Observation post (added in autumn 1940)
15 Observation post (modified in mid-1942)
16 Mushroom vent
17 Wind direction transmitter (top) and wind strength transmitter (bottom); both relocated to superstructure antenna outriggers in autumn 1940)
18 Additional tubes fitted on optics (from January 1942)
19 Radar hut (added in November 1939)

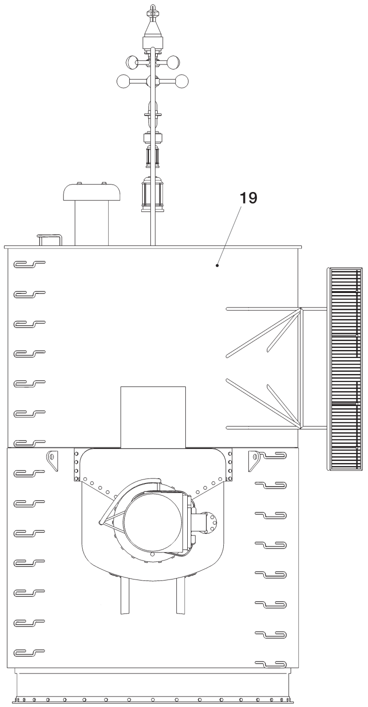

F1/5

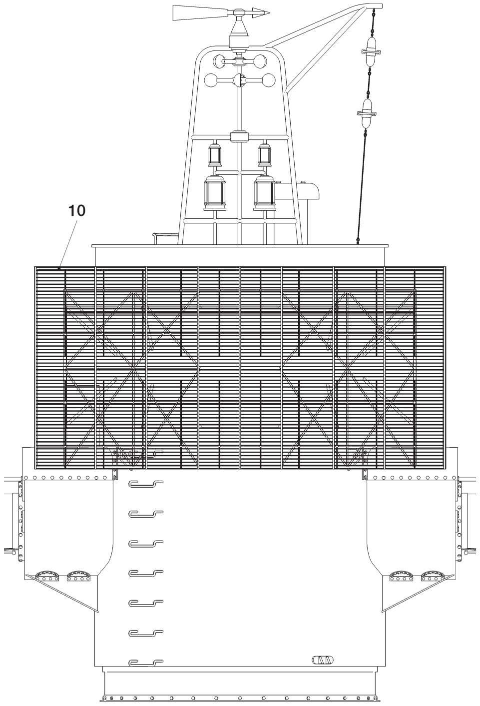

F1/6

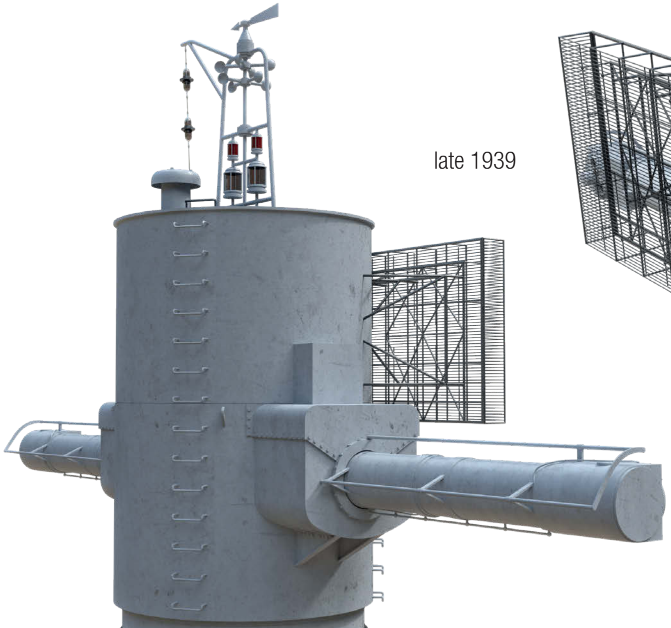

late 1939

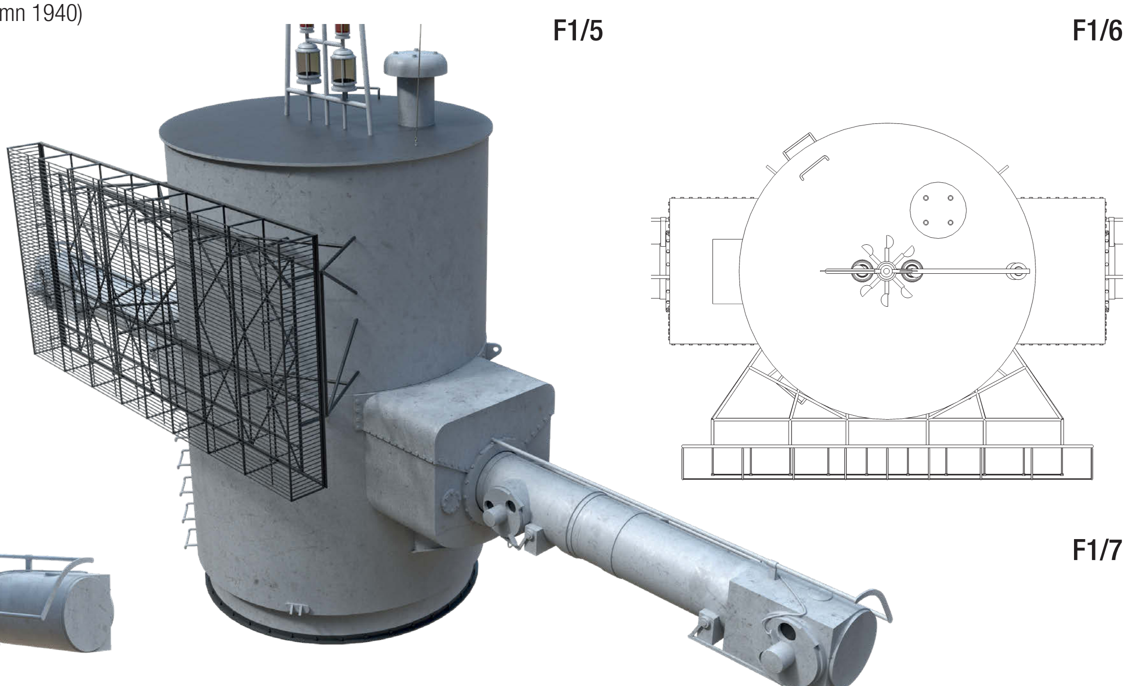

F1/7

10.5M RANGEFINDER DOME ON TOP OF MAIN FIRE CONTROL POST (1/75 SCALE)

F1/8 RIGHT PROFILE, LATE 1940
F1/9 BACK VIEW, LATE 1940 (FRAGMENT)
F1/10 PLAN, LATE 1940 (FRAGMENT)

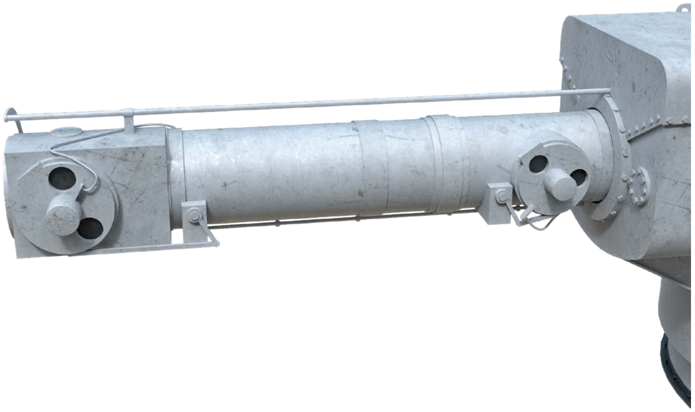

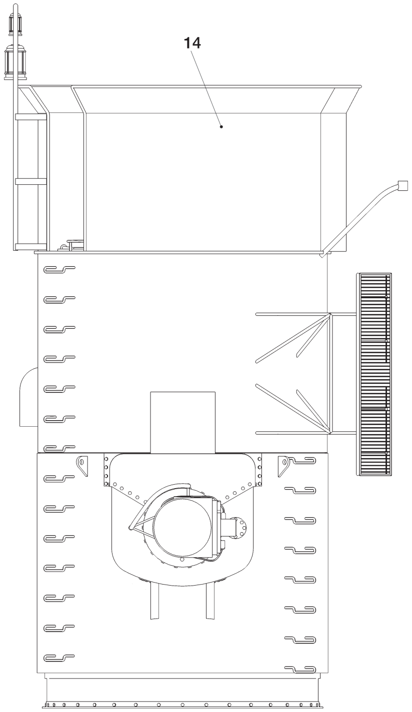

F1/8

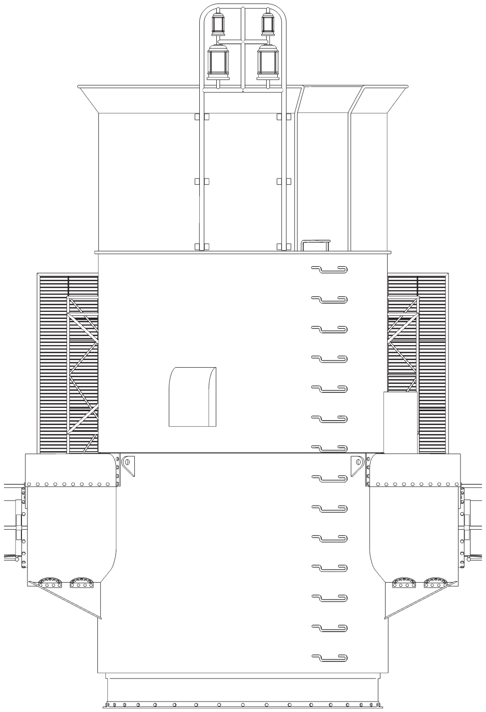

F1/9

late 1940

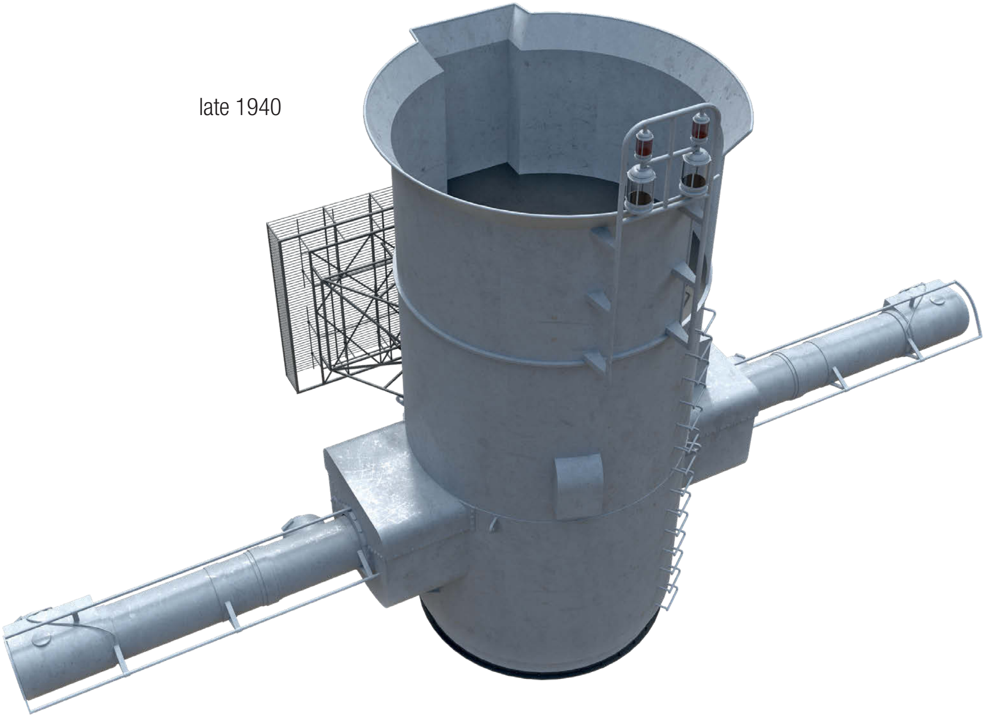

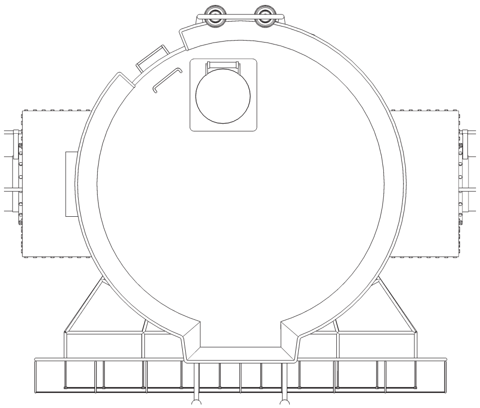

F1/10

F1/11 RIGHT PROFILE, EARLY 1942
F1/12 BACK VIEW, EARLY 1942 (FRAGMENT)
F1/13 PLAN, EARLY 1942

early 1942

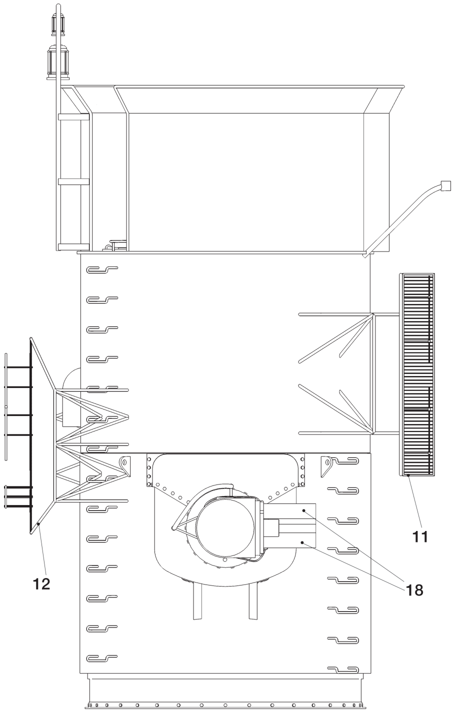

F1/11

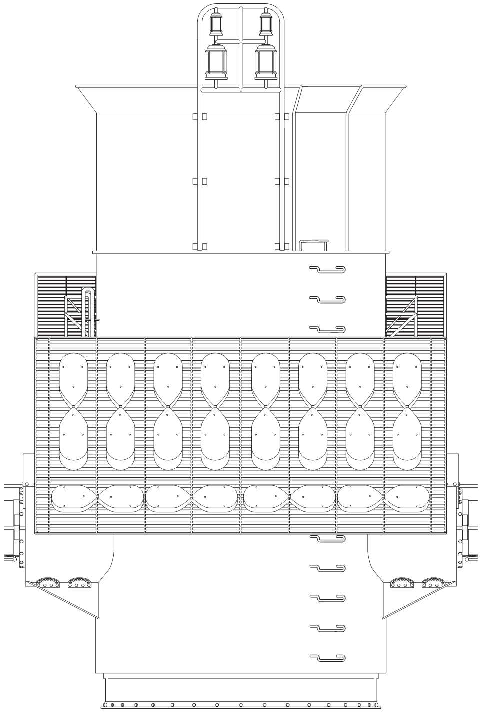

F1/12

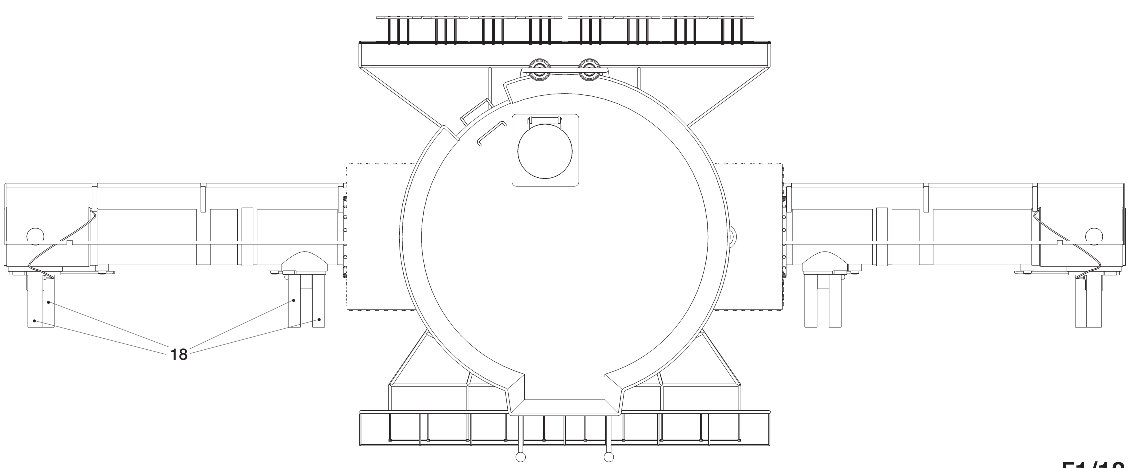

F1/13

10.5M RANGEFINDER DOME ON TOP OF MAIN FIRE CONTROL POST (1/75 SCALE)

F1/14 RIGHT PROFILE, MID-1942
F1/15 FRONT VIEW, MID-1942 (FRAGMENT)
F1/16 BACK VIEW, MID-1942 (FRAGMENT)
F1/17 PLAN, MID-1942 (FRAGMENT)

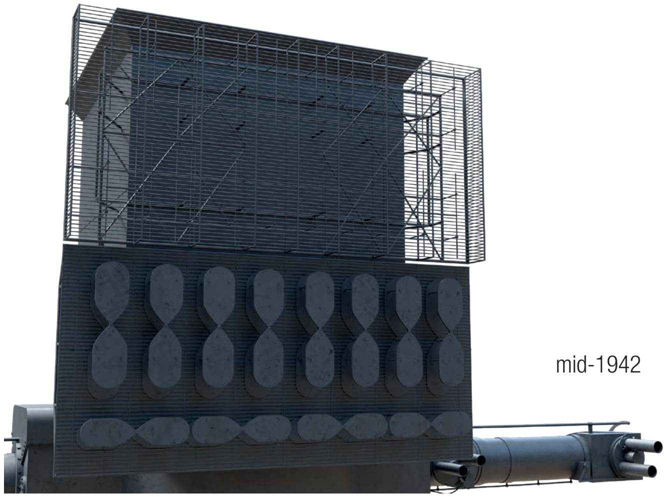

mid-1942

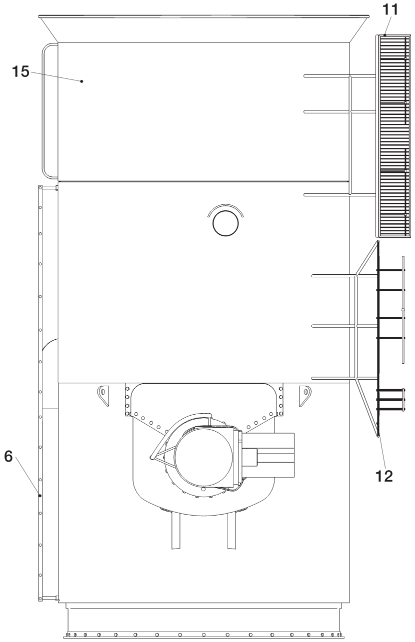

F1/14

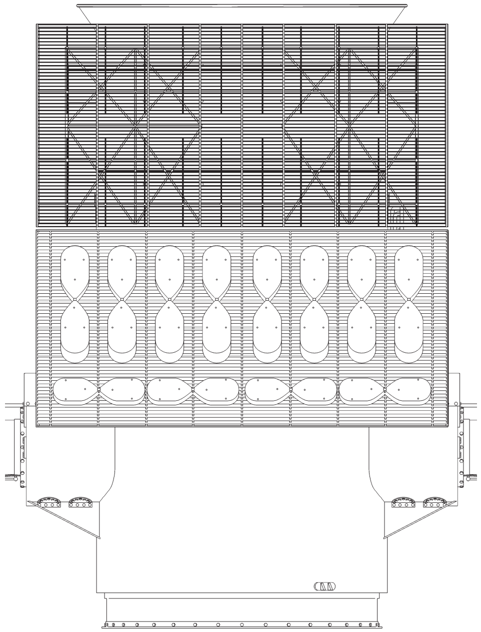

F1/15

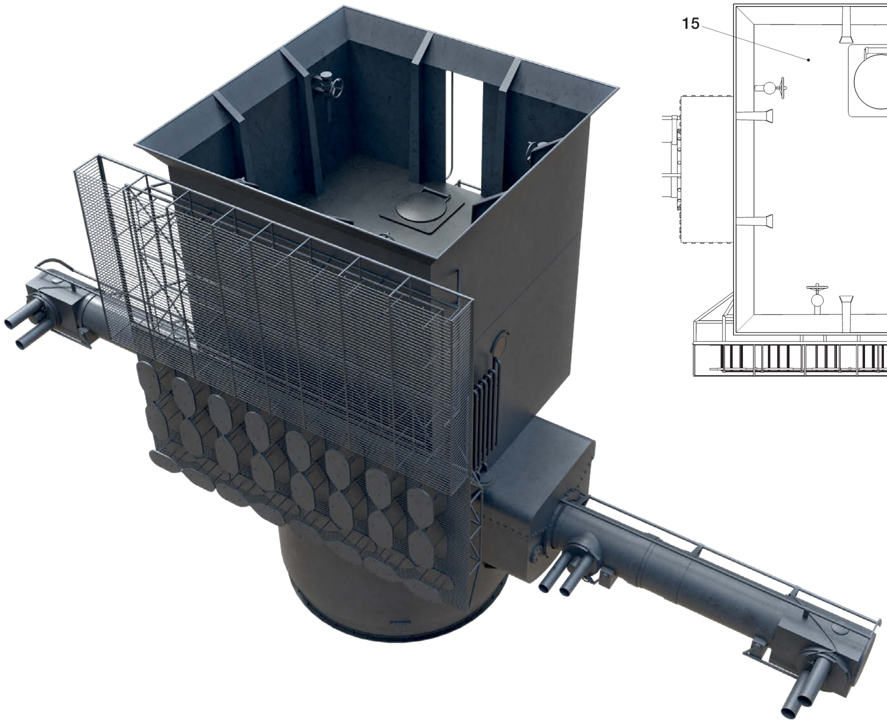

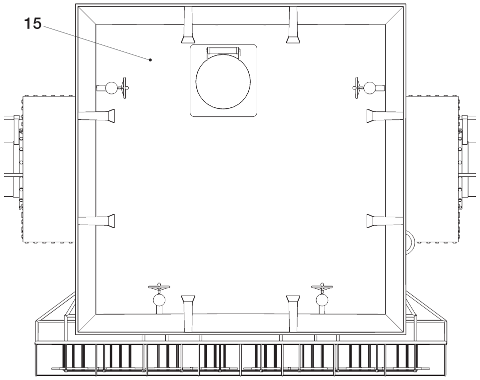

F1/17

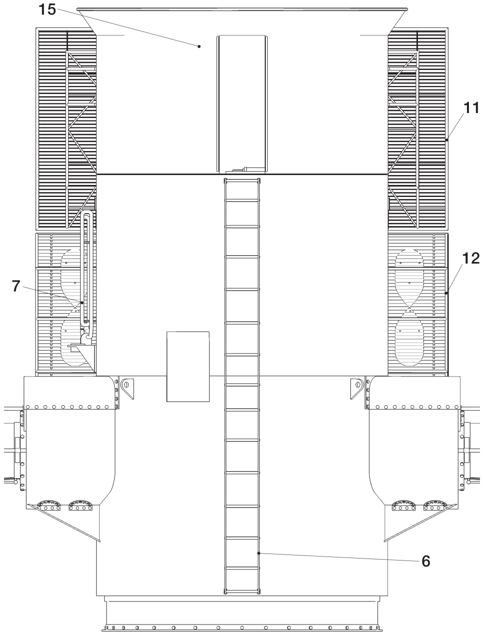

F1/16

F1/18 LEFT PROFILE, LATE 1943
F1/19 FRONT VIEW, LATE 1943 (FRAGMENT)
F1/20 PLAN, LATE 1943 (FRAGMENT)
F1/21 FUMO 26 RADAR ANTENNA SHOWN WITHOUT ITS NETTING FOR CLARITY, FRONT VIEW

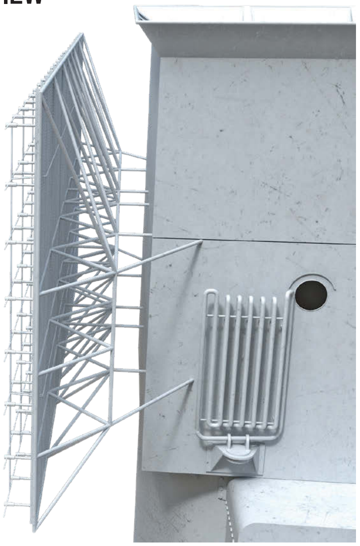

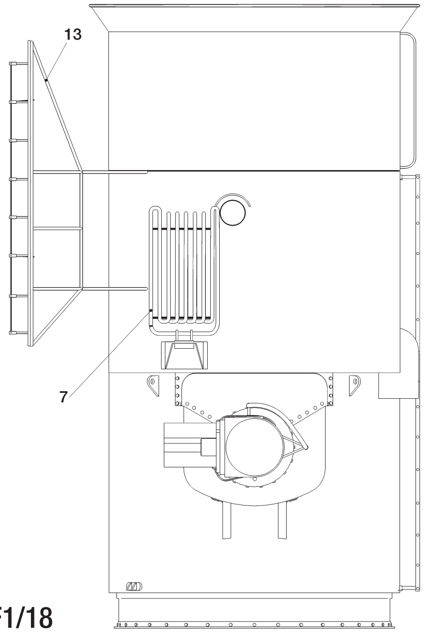

F1/18

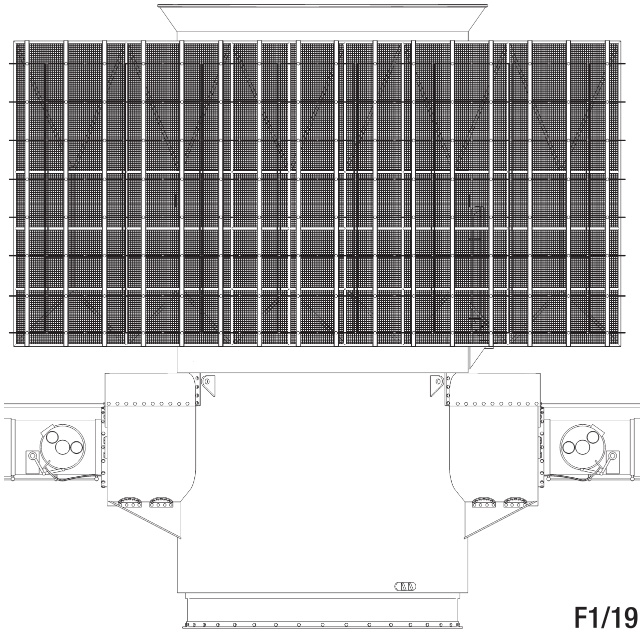

F1/19

late 1943

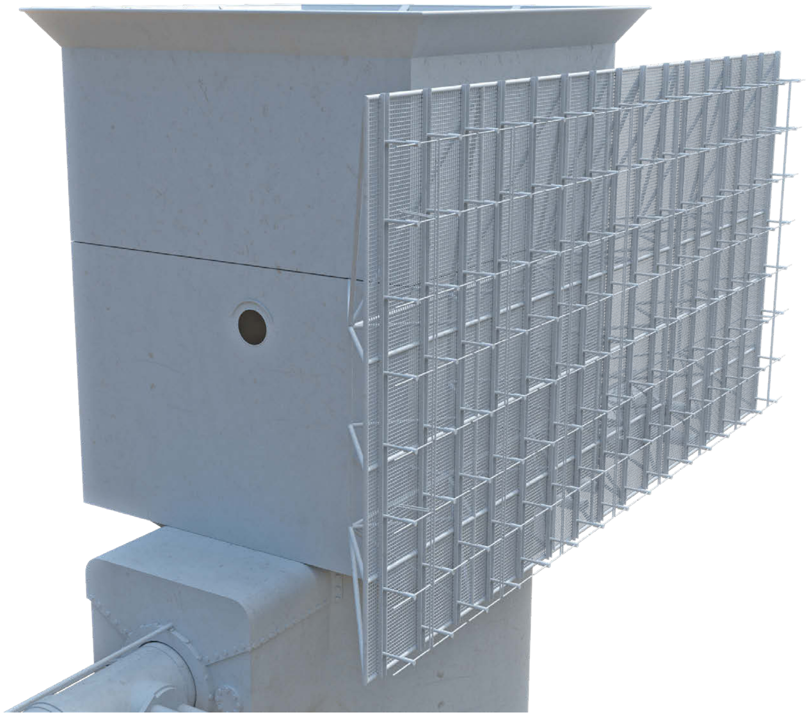

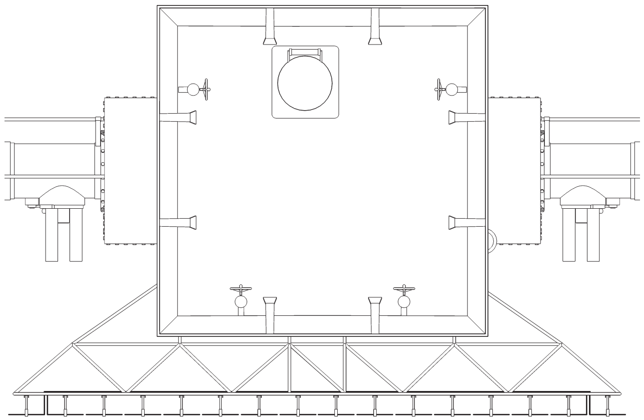

F1/20

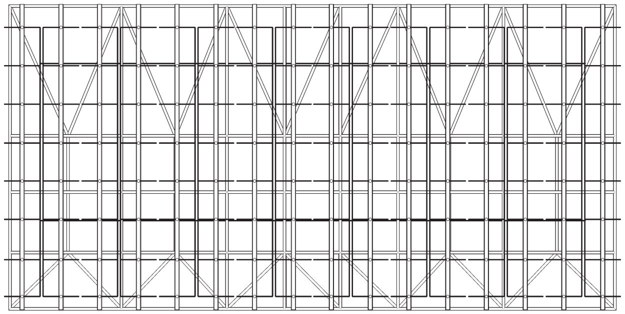

F1/21

10.5M RANGEFINDER DOME ON TOP OF AFT FIRE CONTROL POST (1/75 SCALE)

F1/22 RIGHT PROFILE, EARLY 1939
F1/23 FRONT VIEW, EARLY 1939
F1/24 PLAN, EARLY 1939

F1/22–32 10.5M RANGEFINDER DOME ON TOP OF AFT FIRE CONTROL POST

1. Inflatable raft container (removed in January 1942)
2. FuMO 27 radar antenna (fitted in January 1942; different antenna form than the FuMO 27 on main fire control post)
3. FuMO 26 radar antenna (replaced FuMO 27 antenna around October–November 1943; different antenna size than the FuMO 26 on main fire control post)
4. FuMB Ant 6 *Palau* passive detector antenna (added in mid-1942)
5. Radar hut (added in January 1942)
6. Additional tubes fitted on optics (from January 1942)

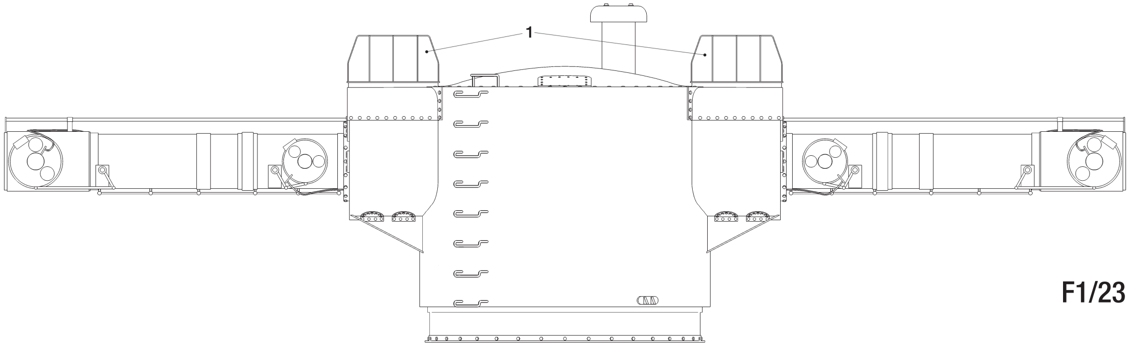

F1/23

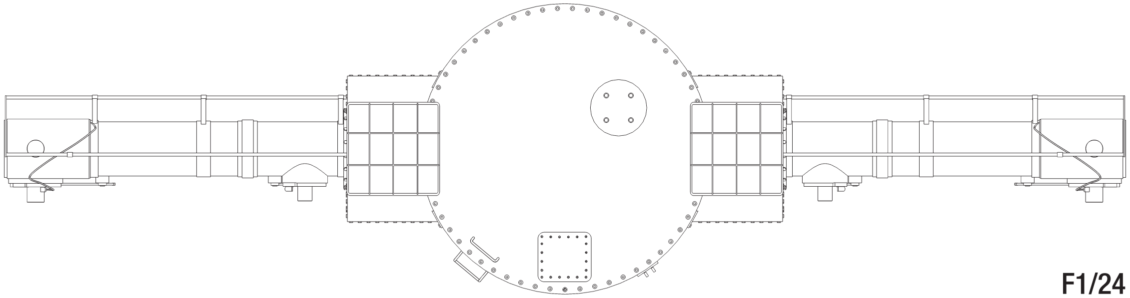

F1/24

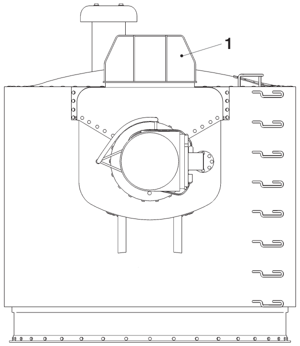

F1/22

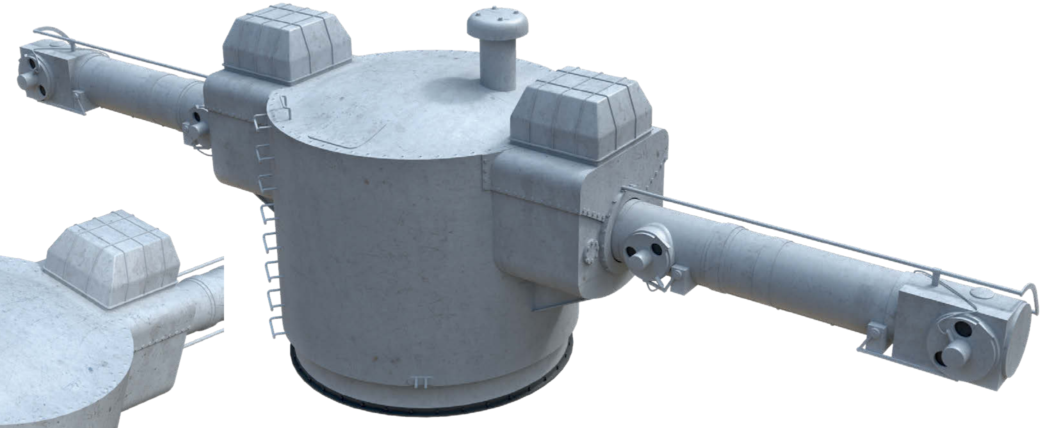

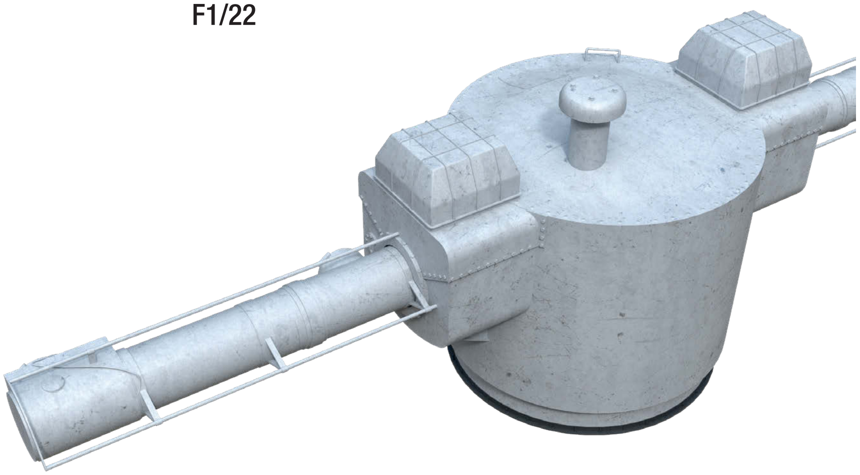

early 1939

F1/25 LEFT PROFILE, EARLY 1942
F1/26 FRONT VIEW, EARLY 1942 (FRAGMENT)
F1/27 BACK VIEW, EARLY 1942 (FRAGMENT)
F1/28 PLAN, EARLY 1942
F1/29 FUMO 27 RADAR ANTENNA SHOWN WITHOUT ITS NETTING FOR CLARITY, FRONT VIEW

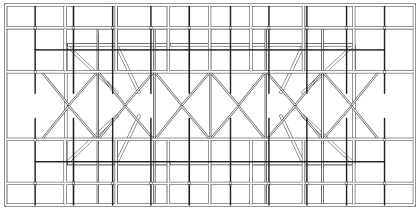

F1/29

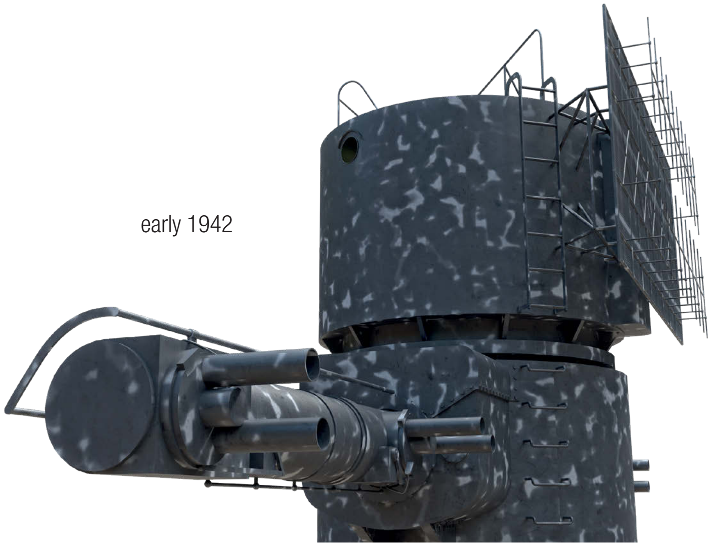

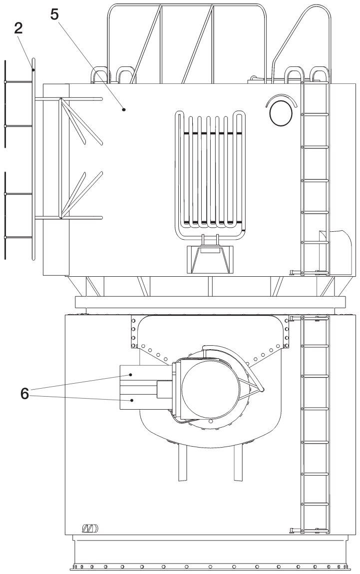

F1/25

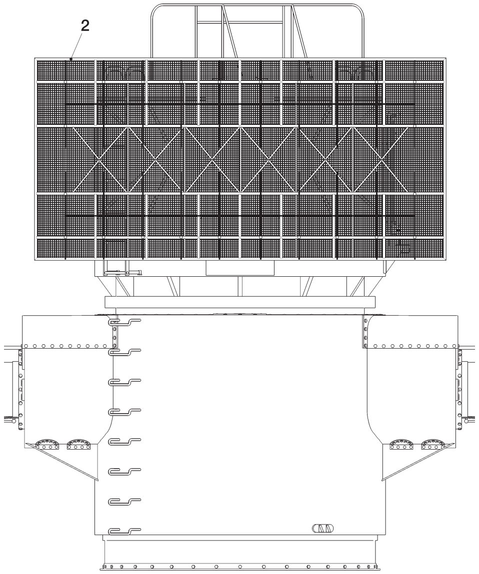

F1/26

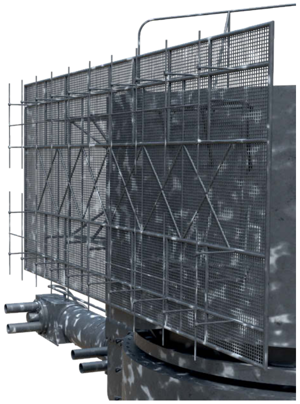

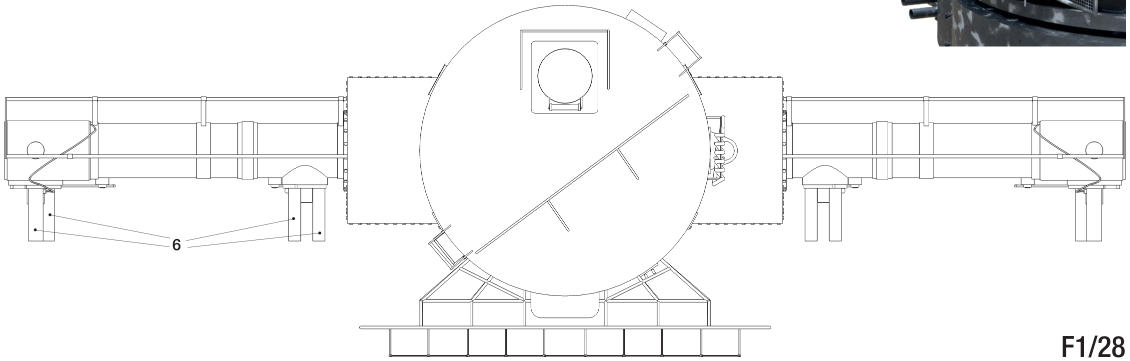

F1/28

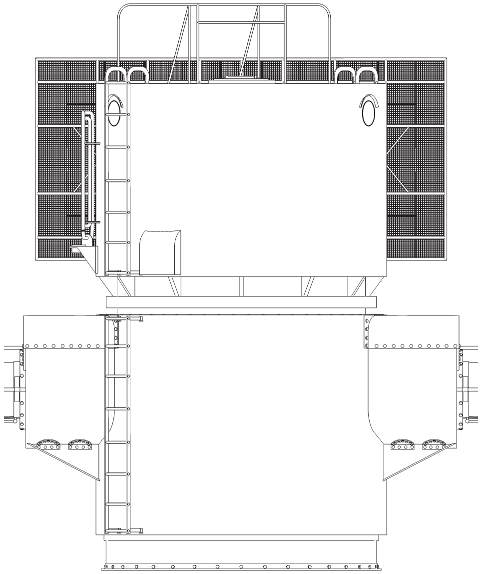

F1/27

10.5M RANGEFINDER DOME ON TOP OF AFT FIRE CONTROL POST (1/75 SCALE)

F1/30 RIGHT PROFILE, LATE 1943
F1/31 FRONT VIEW, LATE 1943 (FRAGMENT)
F1/32 PLAN, LATE 1943 (FRAGMENT)

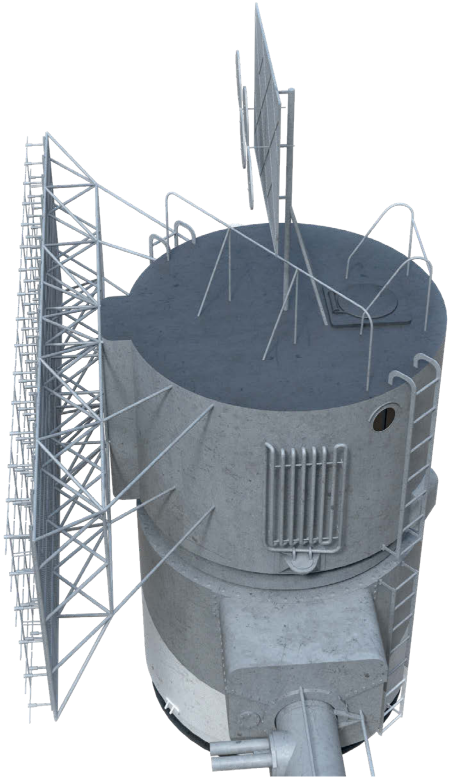

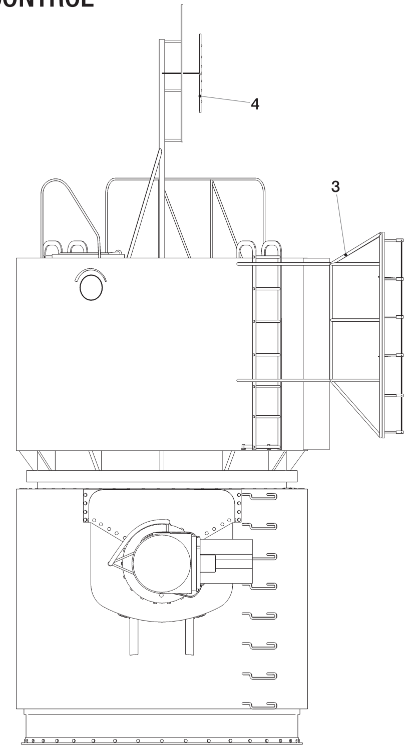

F1/30

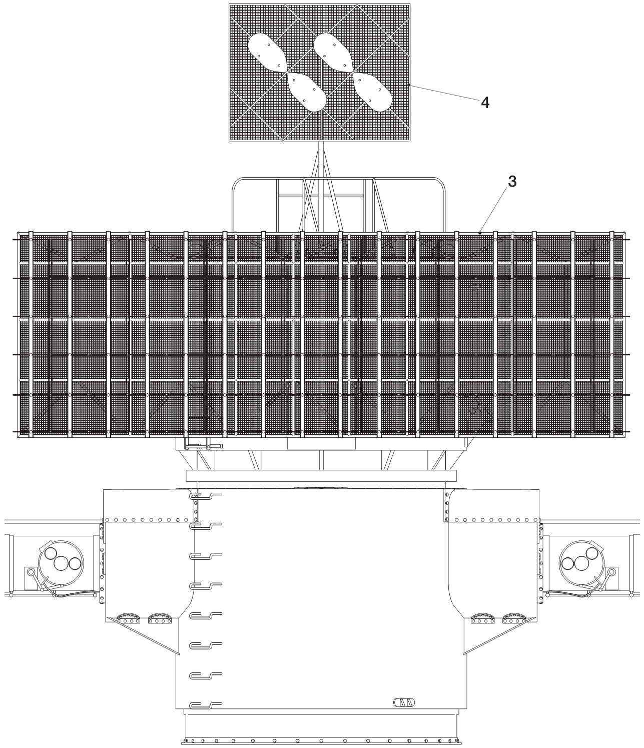

F1/31

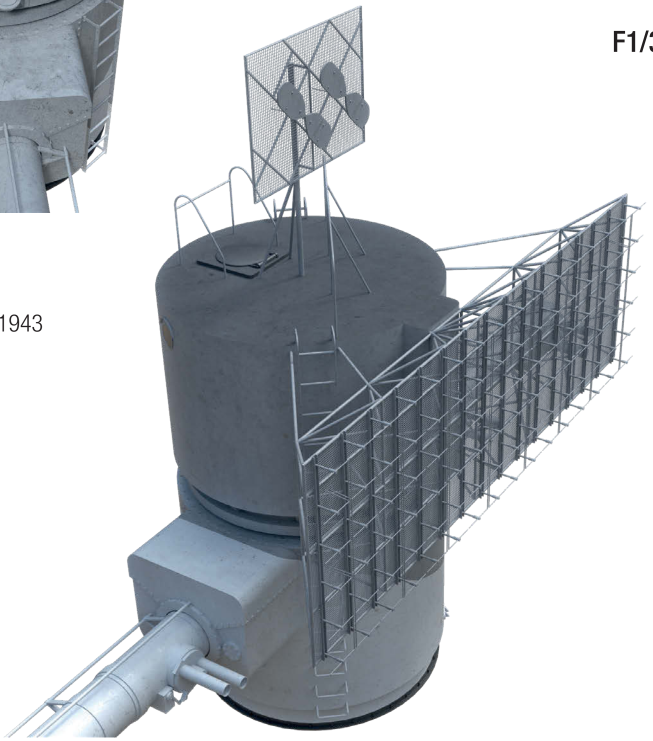

late 1943

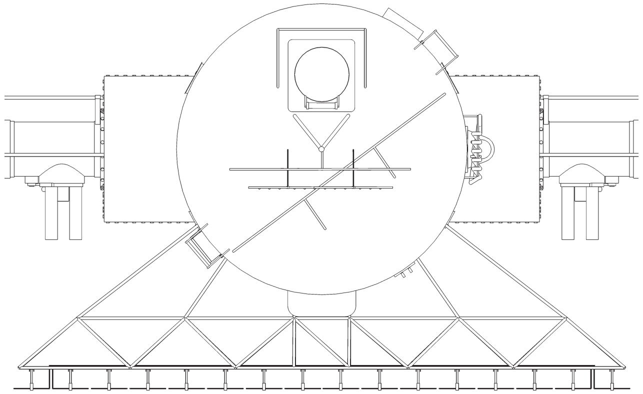

F1/32

7M RANGEFINDER DOME ON TOP OF FORE FIRE CONTROL POST (1/75 SCALE)

F1/33 RIGHT PROFILE, 1939
F1/34 FRONT VIEW, 1939
F1/35 BACK VIEW, 1939
F1/36 PLAN, 1939
F1/37 PLAN, EARLY 1942

F1/33–37 7M RANGEFINDER DOME ON TOP OF FORE FIRE CONTROL POST

1 Wire antenna outrigger
2 Additional tubes fitted on optics (from January 1942)

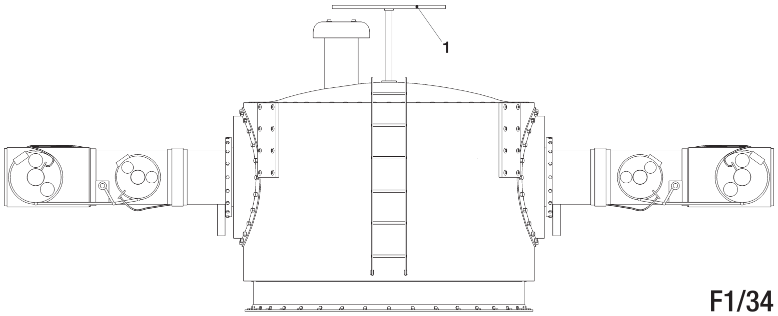

F1/34

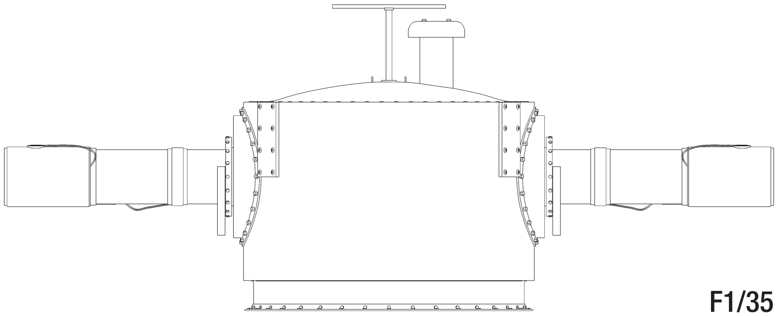

F1/35

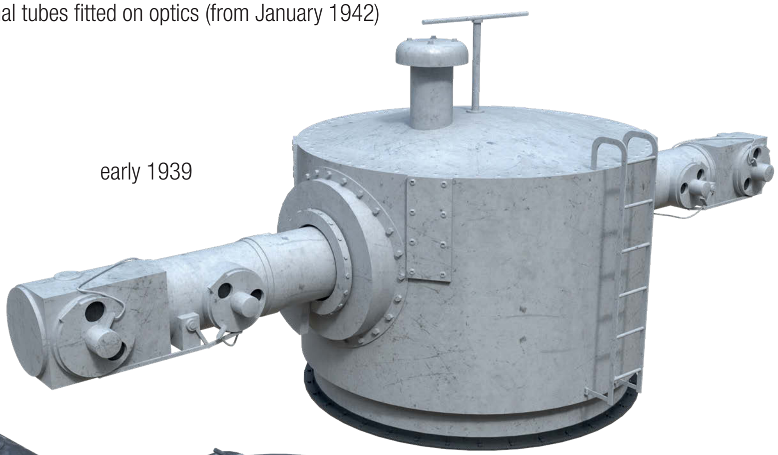

early 1939

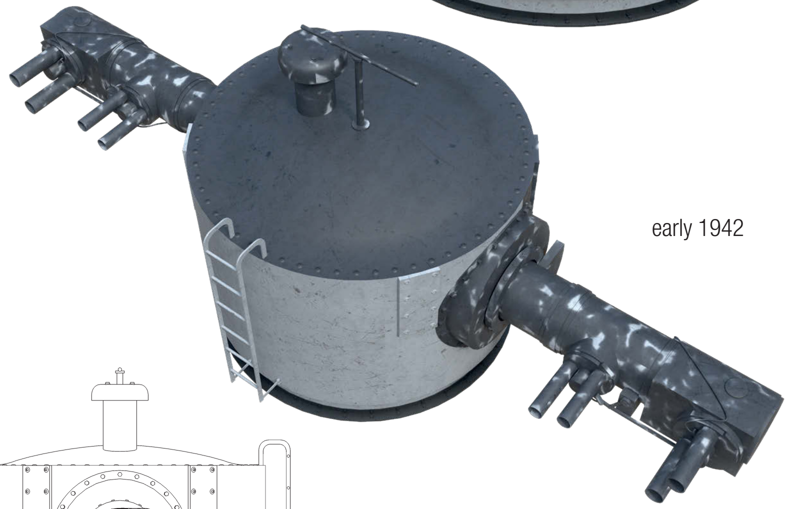

early 1942

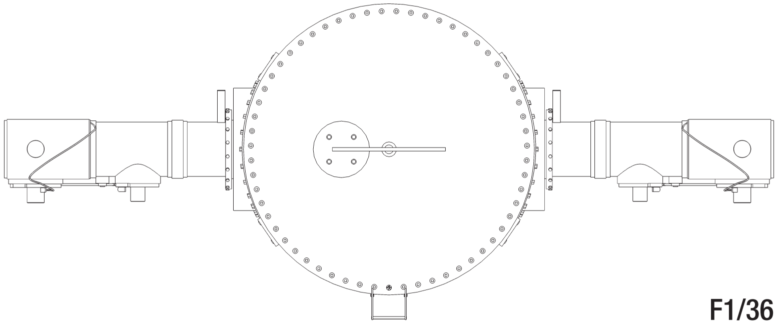

F1/36

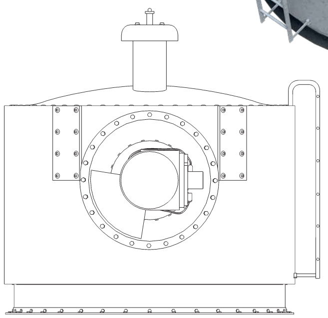

F1/33

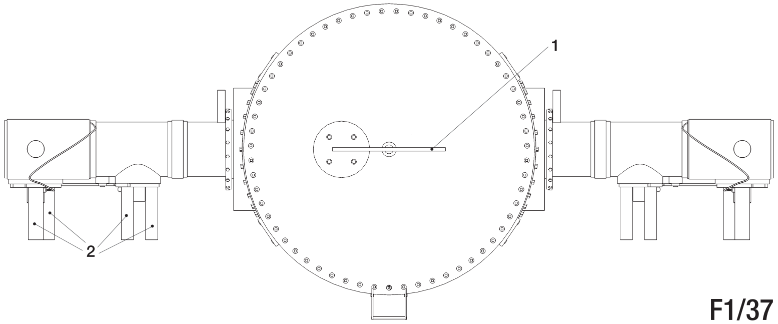

F1/37

3-METER NIGHT RANGEFINDER 3U (1/40 SCALE)

F1/38 RIGHT PROFILE
F1/39 LEFT PROFILE
F1/40 FRONT VIEW
F1/41 BACK VIEW
F1/42 PLAN

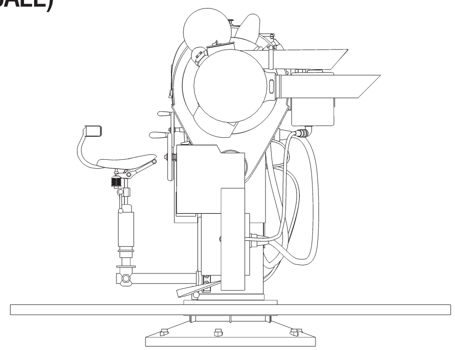

F1/38

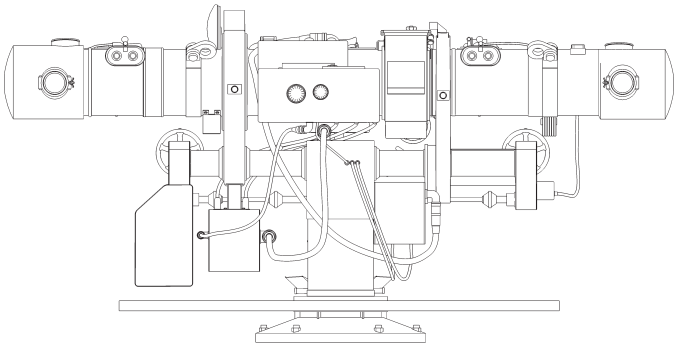

F1/40

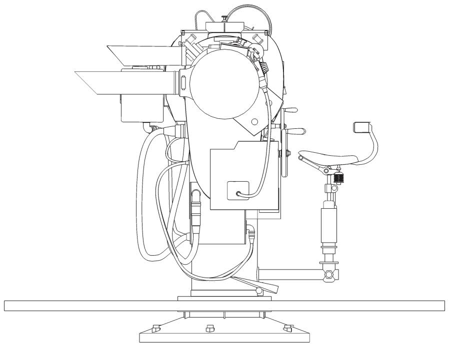

F1/39

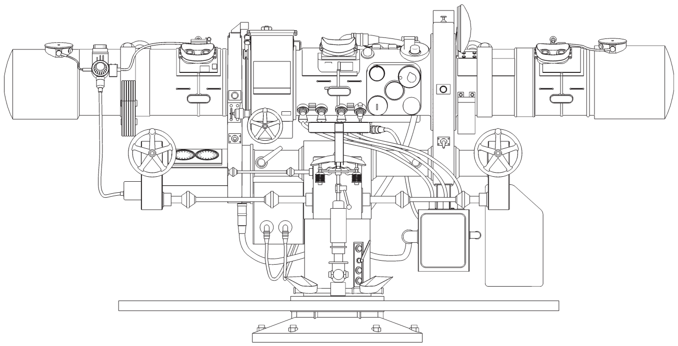

F1/41

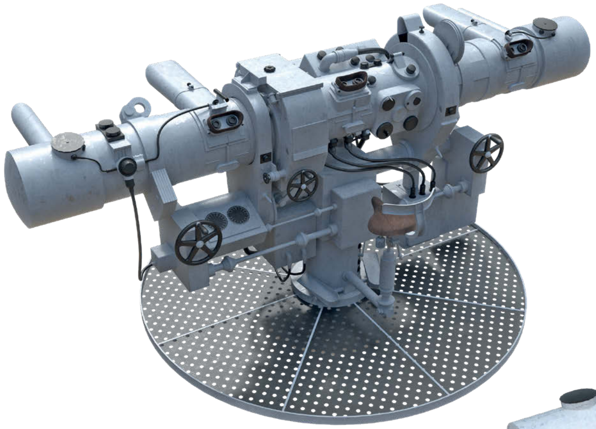

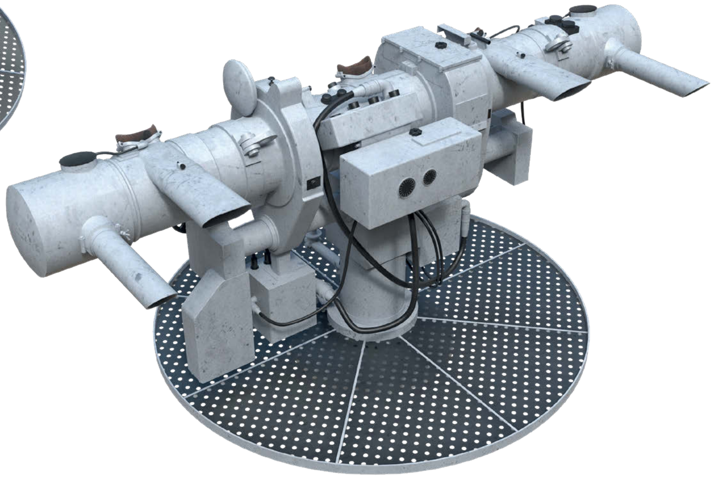

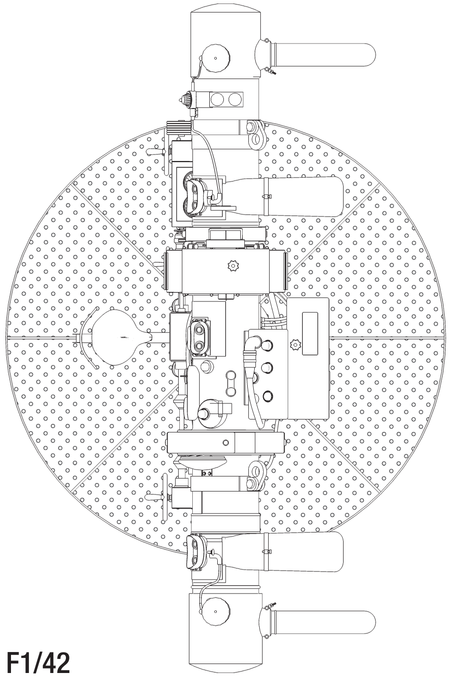

F1/42

F1/43 RIGHT PROFILE AFTER ADDITION OF PROTECTIVE SHIELD
IN MID-1941
F1/44 FRONT VIEW AFTER ADDITION OF PROTECTIVE SHIELD
IN MID-1941
F1/45 PLAN AFTER ADDITION OF PROTECTIVE SHIELD
IN MID-1941

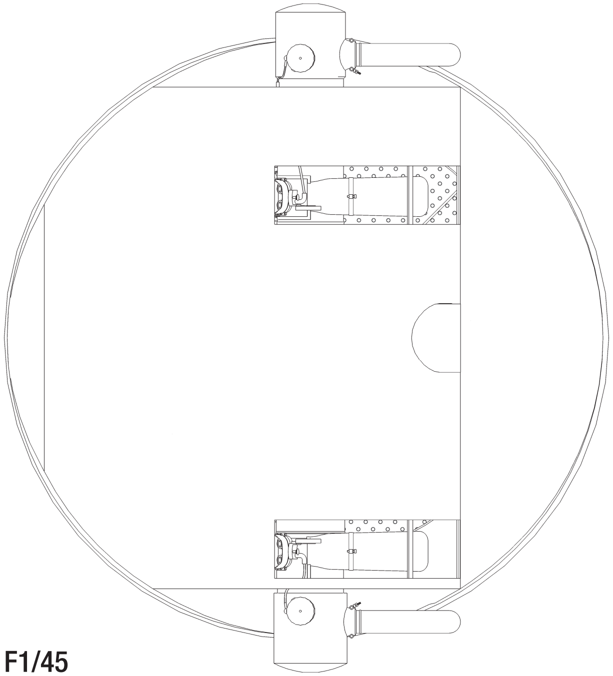

F1/45

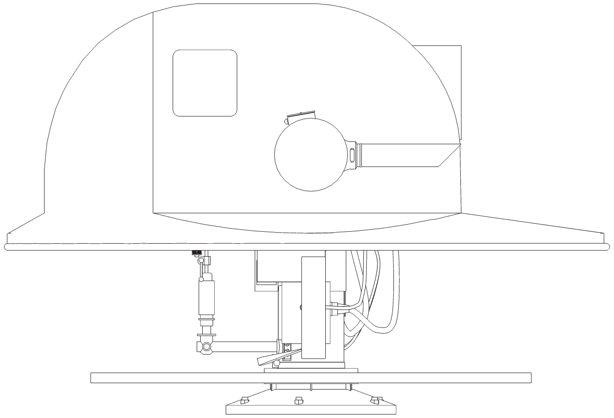

F1/43

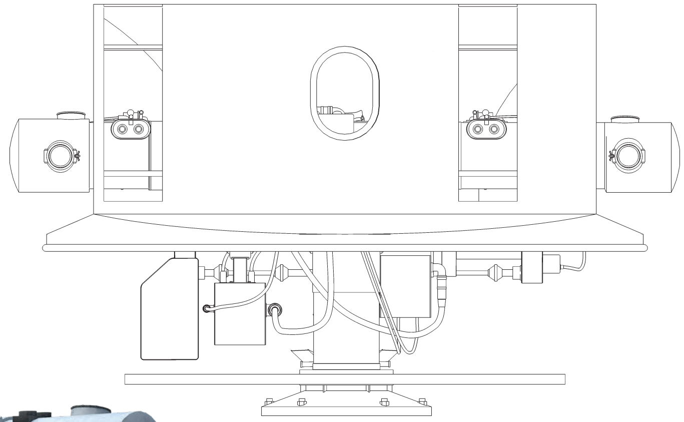

F1/44

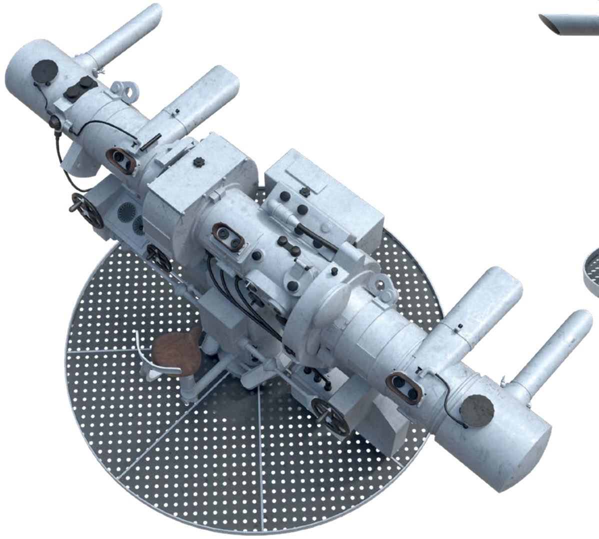

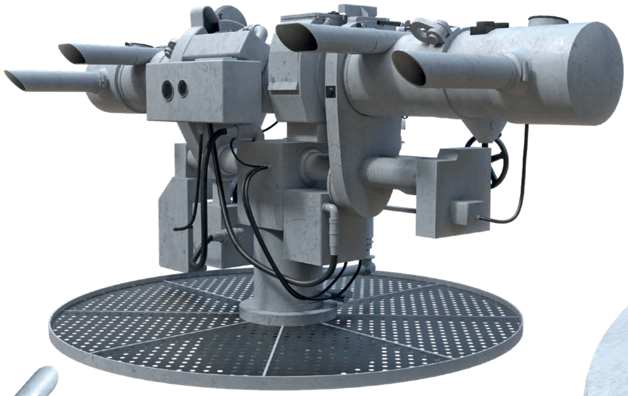

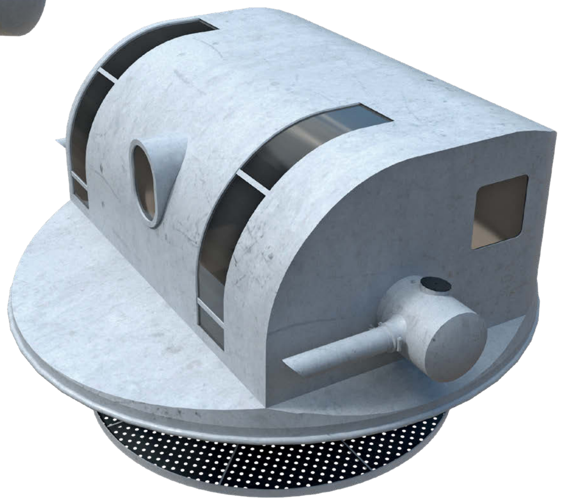

ZIELSÄULE C/38 S – MAIN AND SECONDARY ARTILLERY TARGET GIVER (1/25 SCALE)

F1/46 RIGHT PROFILE
F1/47 FRONT VIEW
F1/48 BACK VIEW
F1/49 PLAN

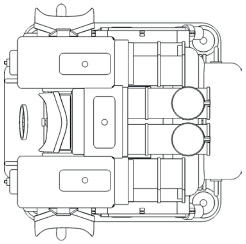
F1/49

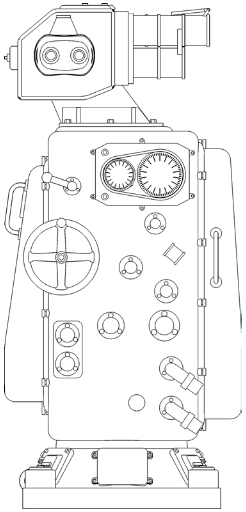
F1/46

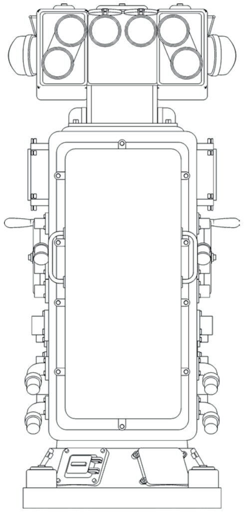
F1/47

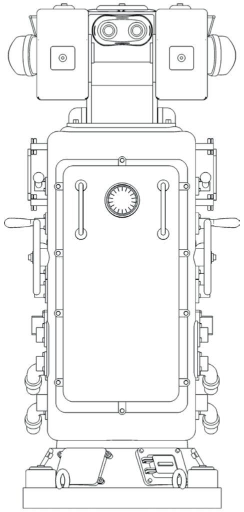
F1/48

F1/50 *ZIELGEBER* C/38 S – MAIN AND SECONDARY ARTILLERY TARGET GIVER (1/25 SCALE)

F1/51 PERISCOPES FROM ROOFS OF ARTILLERY FIRE CONTROL POSTS (1/25 SCALE)

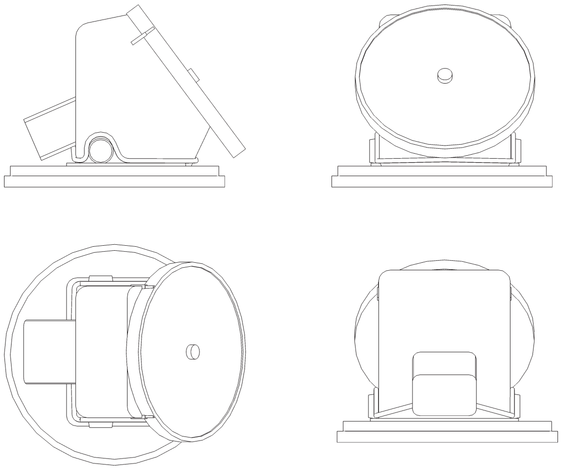

F1/50

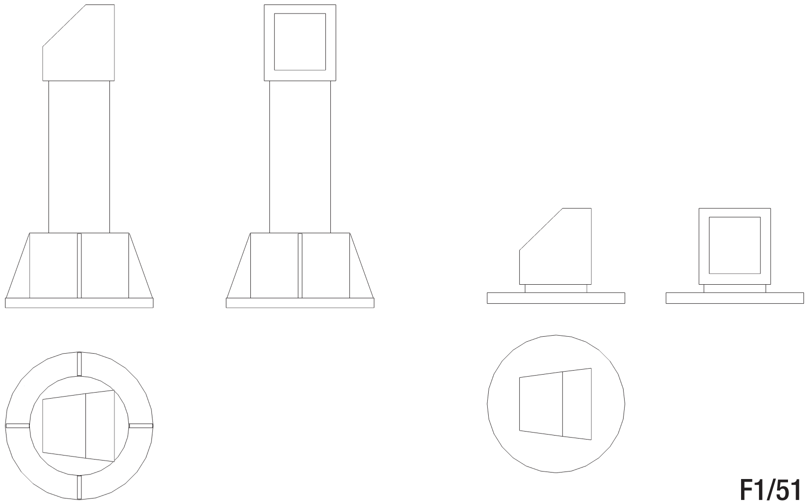

F1/51

AA ARTILLERY DIRECTOR SL-6 WITH A 4-METER RANGEFINDER (1/75 SCALE)

F2/1 RIGHT PROFILE
F2/2 FRONT VIEW
F2/3 BACK VIEW
F2/4 PLAN
F2/5 RANGEFINDER ARM – BOTTOM VIEW

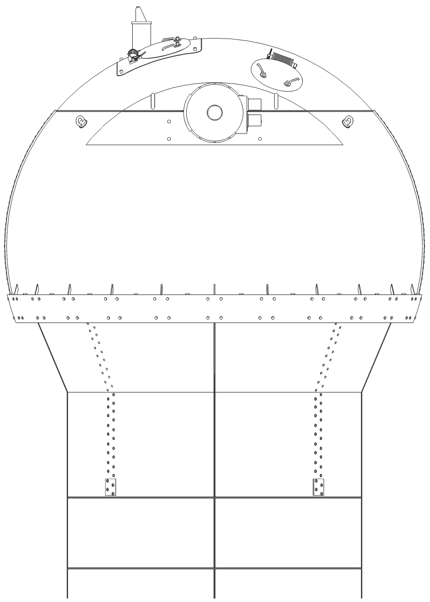

F2/1

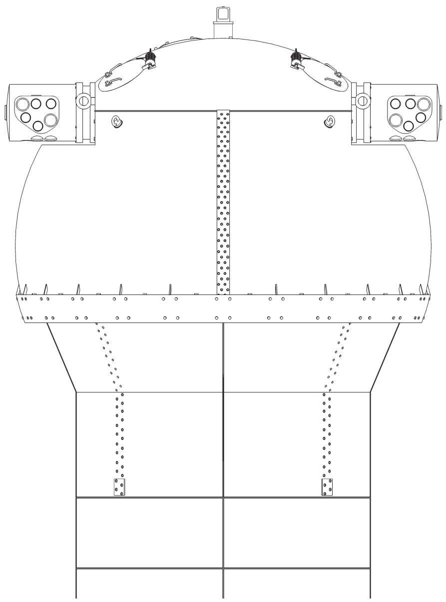

F2/2

1939

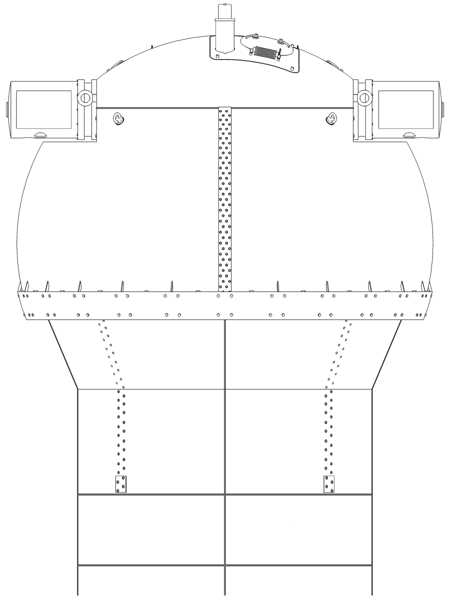

F2/3

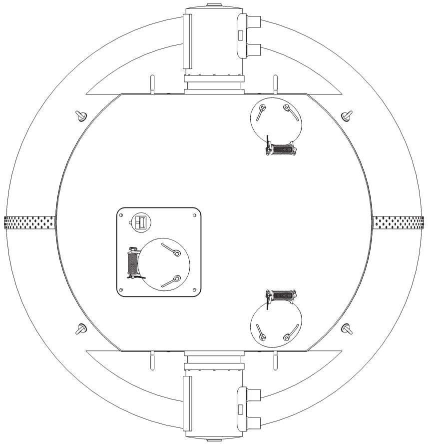

F2/4

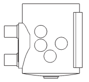

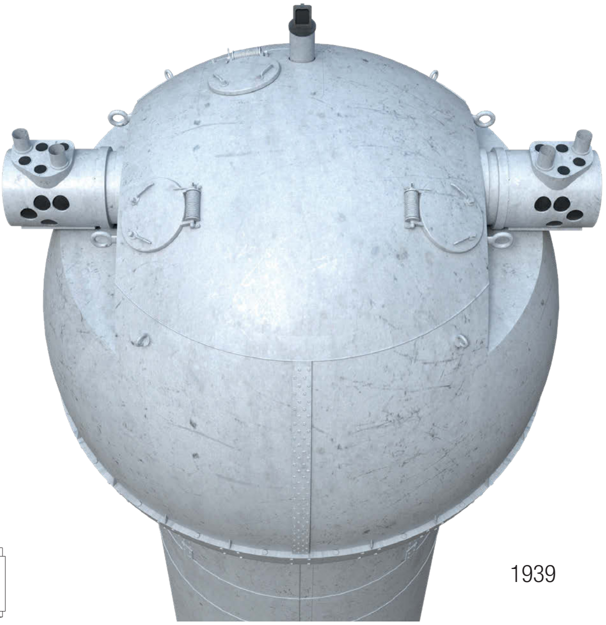

1939

F2/5

early 1941

early 1942

ZAG, *ZIELANWEISEGERÄT* – HEAVY AA ARTILLERY TARGET GIVER (1/25 SCALE)

F2/6 RIGHT PROFILE
F2/7 LEFT PROFILE
F2/8 FRONT VIEW
F2/9 BACK VIEW
F2/10 PLAN

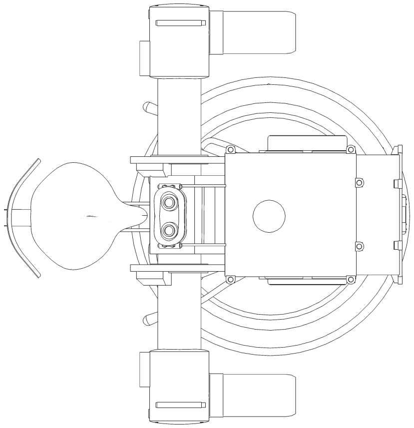

F2/10

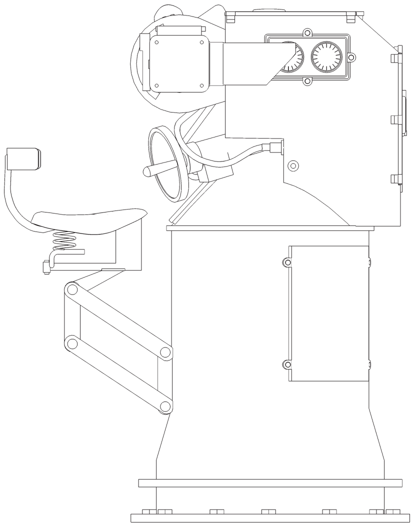

F2/6

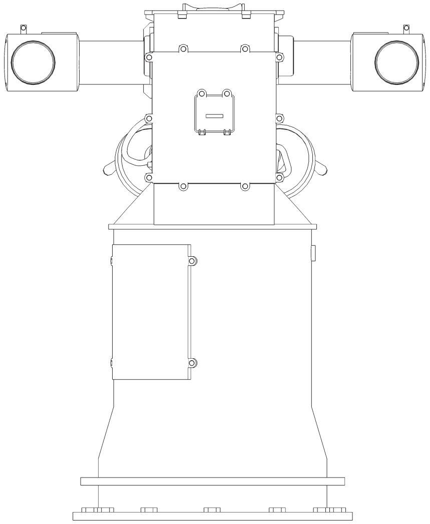

F2/8

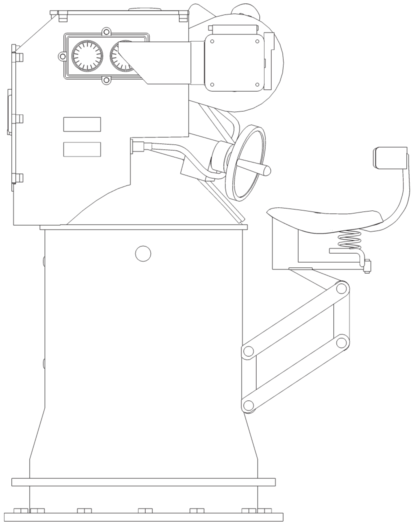

F2/7

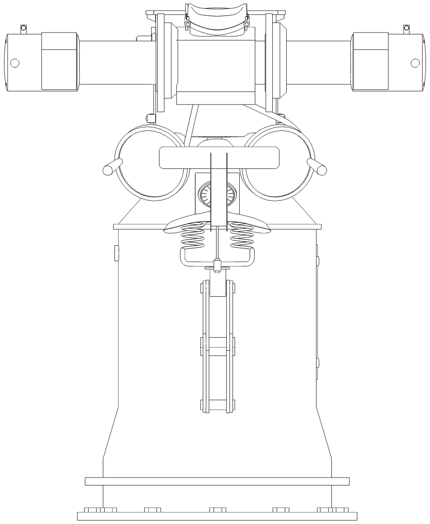

F2/9

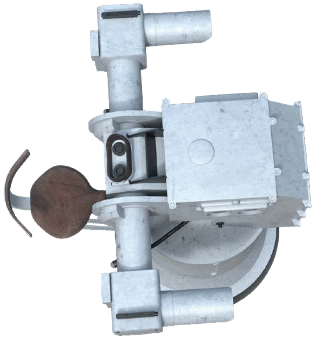

EM 1M R36 – 1-METER MANUAL RANGEFINDER
USED BY THE CREWS OF LIGHT AA GUNS (1/15 SCALE)

F2/11 PROFILE
F2/12 FRONT VIEW
F2/13 BACK VIEW
F2/14 PLAN

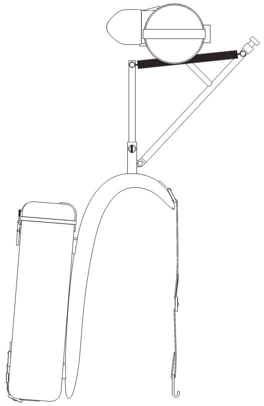

F2/11

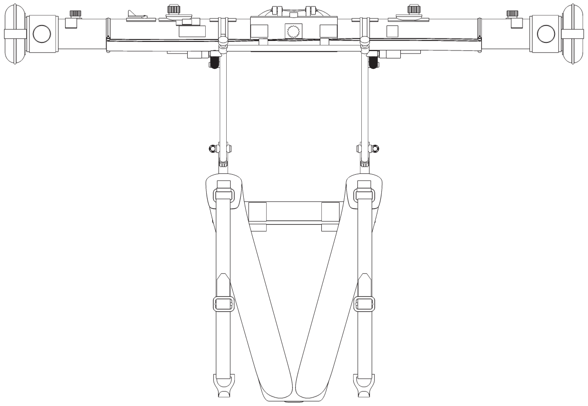

F2/12

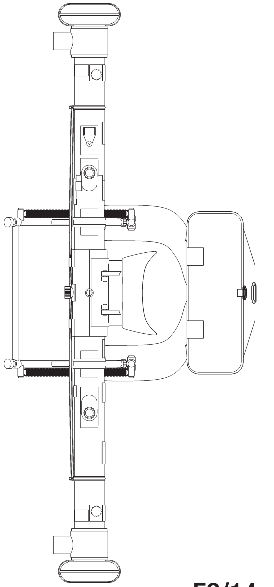

F2/14

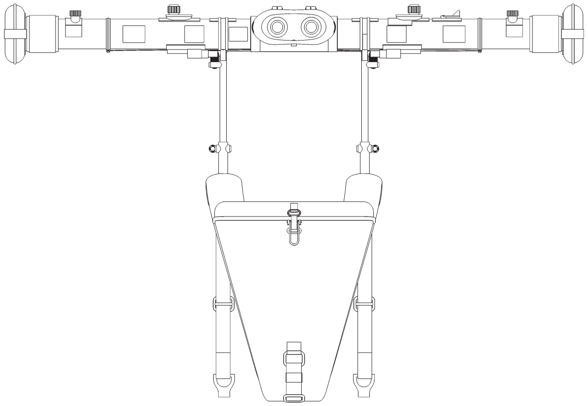

F2/13

FUMB ANT 4 *SUMATRA* PASSIVE DETECTOR ANTENNA, FROM JANUARY 1942 (1/40 SCALE)

F3/1 PROFILE

F3/2 PLAN

FUMB ANT 3 *BALI* PASSIVE DETECTOR ANTENNA, FROM AUTUMN 1943 (1/15 SCALE)

F3/3 PROFILE

F3/4 PLAN

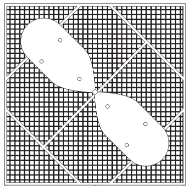

F3/1

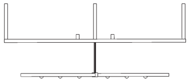

F3/2

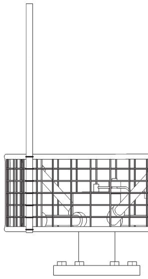

F3/3

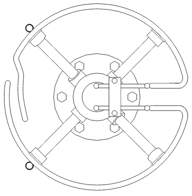

F3/4

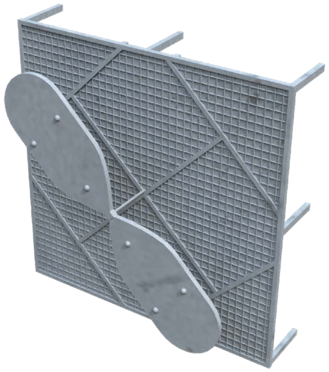

150CM SEARCHLIGHT (1/40 SCALE)

F3/5 RIGHT PROFILE

F3/6 LEFT PROFILE

F3/7 FRONT VIEW

F3/8 BACK VIEW

F3/9 PLAN

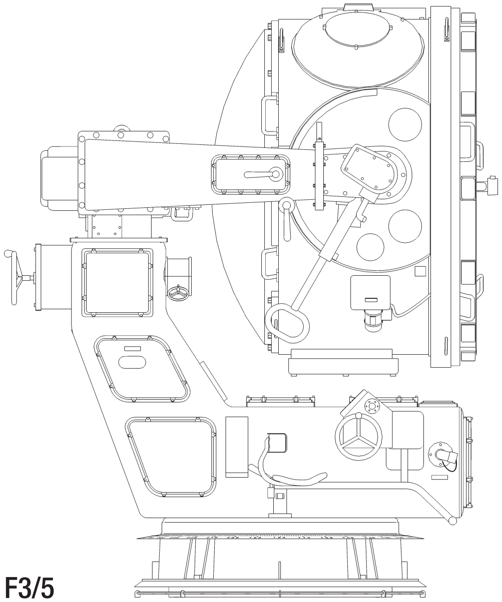

F3/5

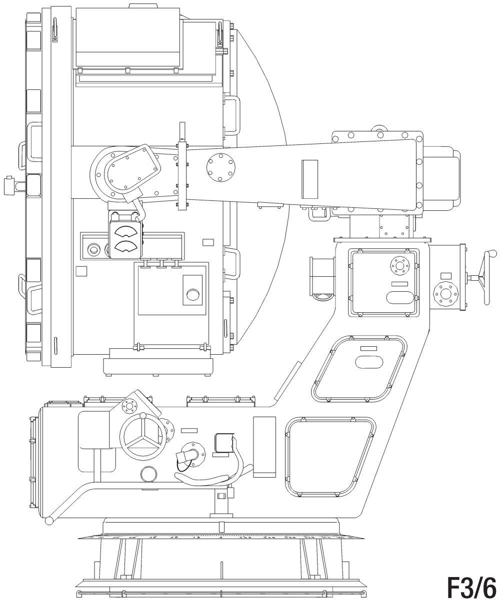

F3/6

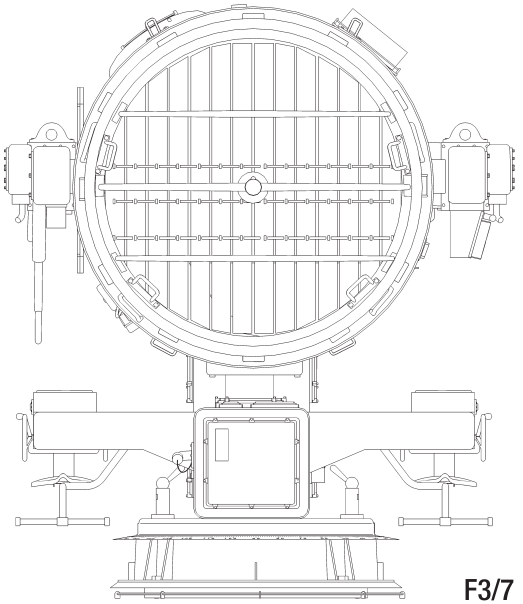

F3/7

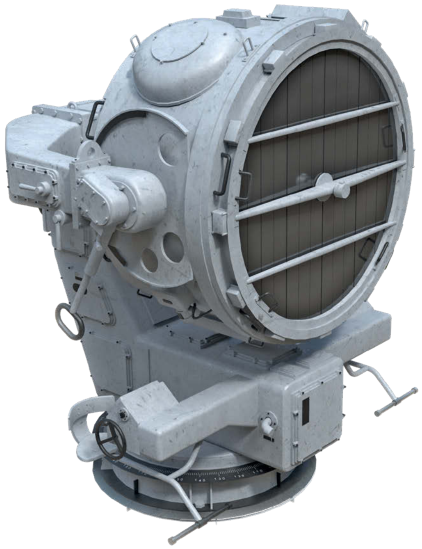

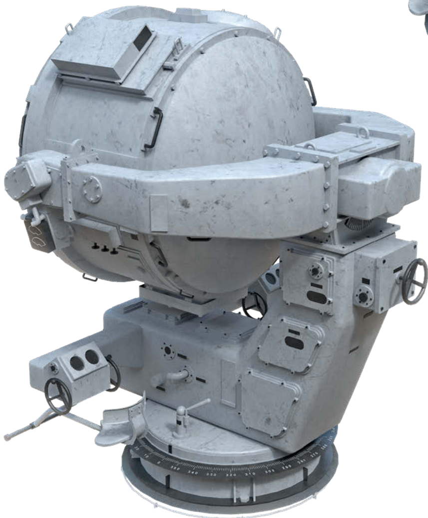

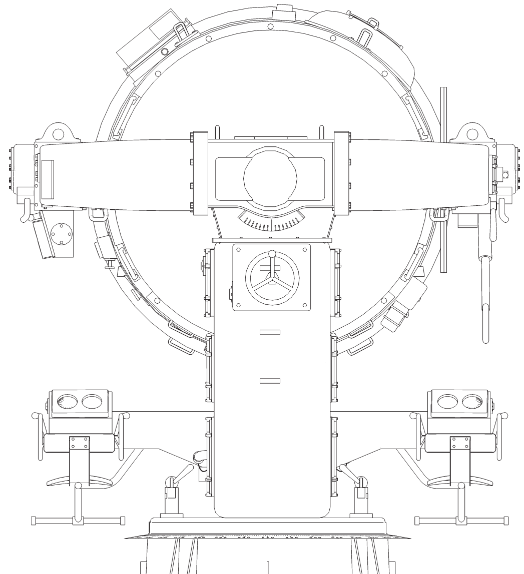

F3/8

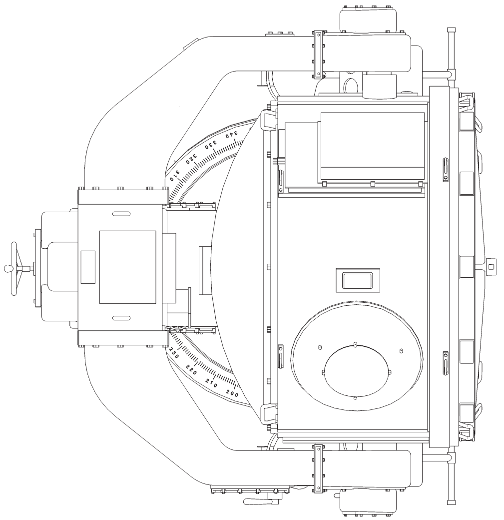

F3/9

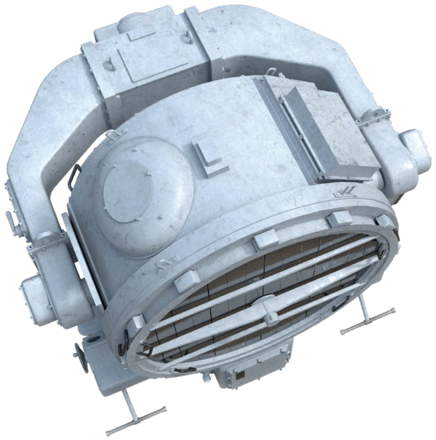

SCHEINWERFERRICHTGERÄT – SEARCHLIGHT DIRECTOR (1/25 SCALE)

F3/10 RIGHT PROFILE
F3/11 FRONT VIEW
F3/12 BACK VIEW
F3/13 PLAN

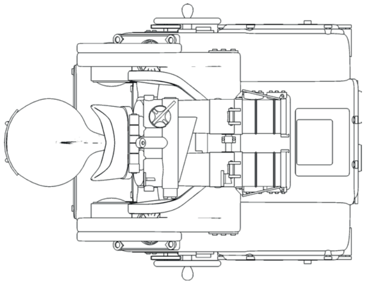

F3/13

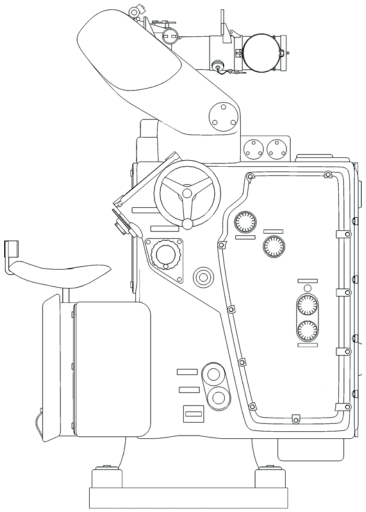

F3/10

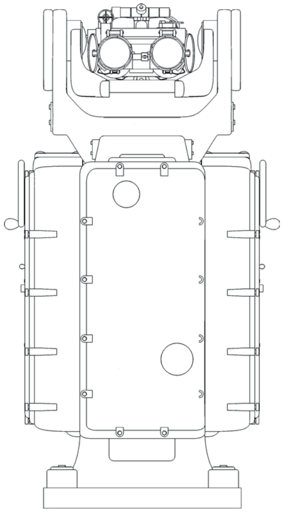

F3/11

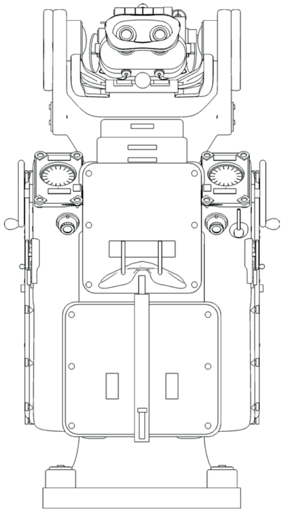

F3/12

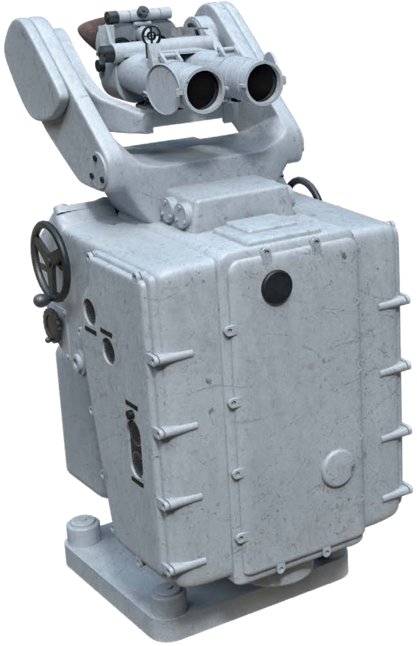

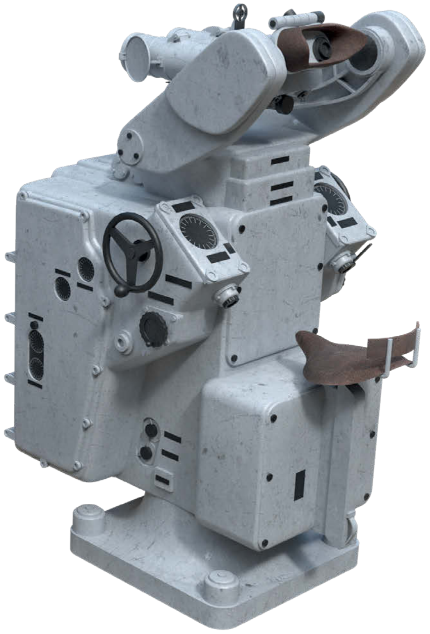

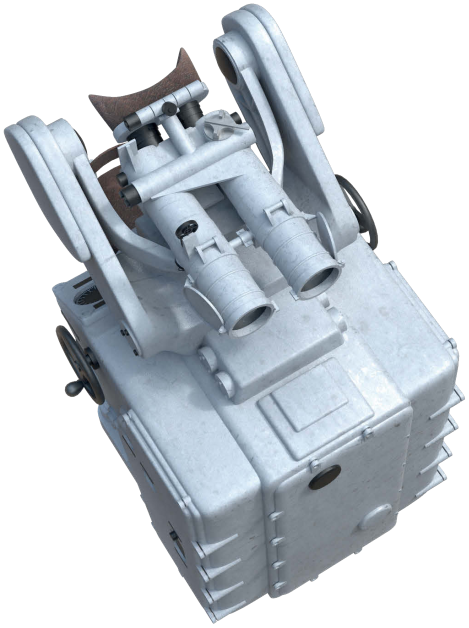

F3/14 CARL ZEISS 10X80 - 20° BINOCULARS (1/15 SCALE)

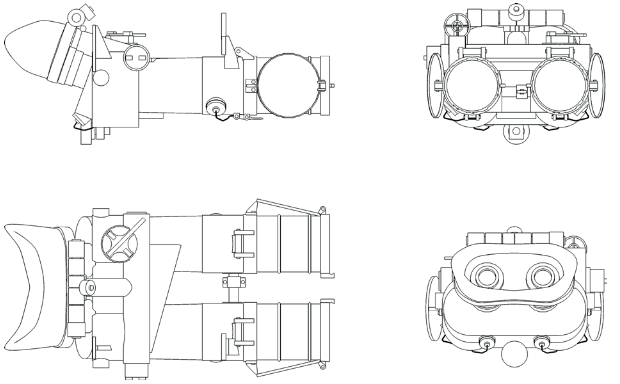

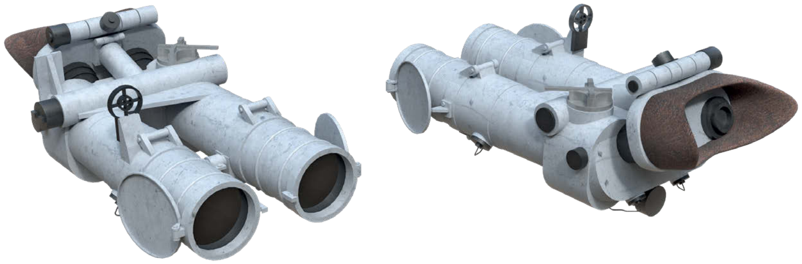

F3/14

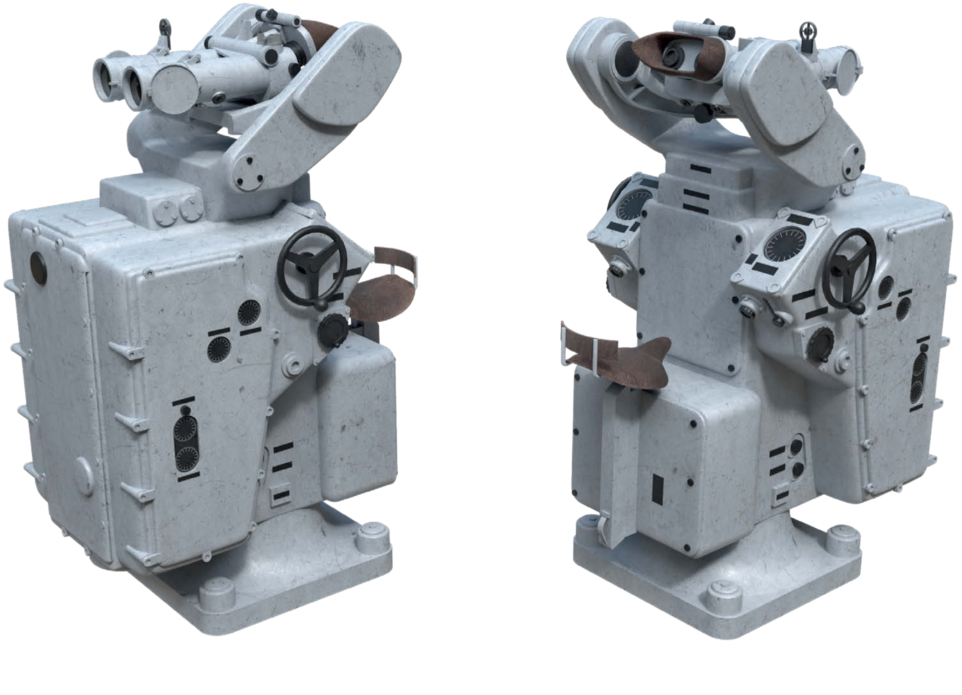

HULL AND DECK FITTINGS, FRAMES 193–226, ORIGINAL BOW FORM, EARLY 1939 (1/200 SCALE)

G1/1 RIGHT PROFILE
G1/2 LEFT PROFILE (FRAGMENT)
G1/3 PLAN

G1/1–4 HULL AND DECK FITTINGS, FRAMES 193–226, EARLY 1939

1 Side anchor
2 Spare anchor (port side only)
3 White painted welded draught marks
4 White painted draught marks (painted over in mid-1939)
5 Ship's crest (removed in September 1939)
6 Loudspeaker (removed in mid-1939)
7 Deck gear basket (removed in mid-1939)
8 Awning stanchion (removed in mid-1939)
9 Towing fairlead

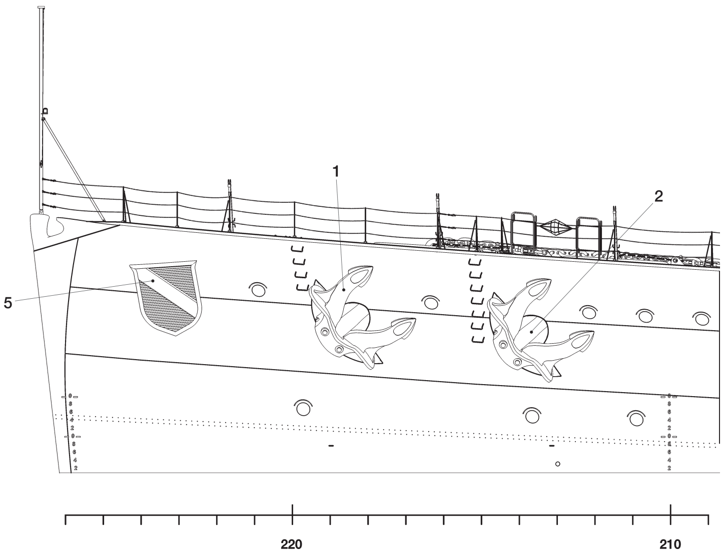

G1/2

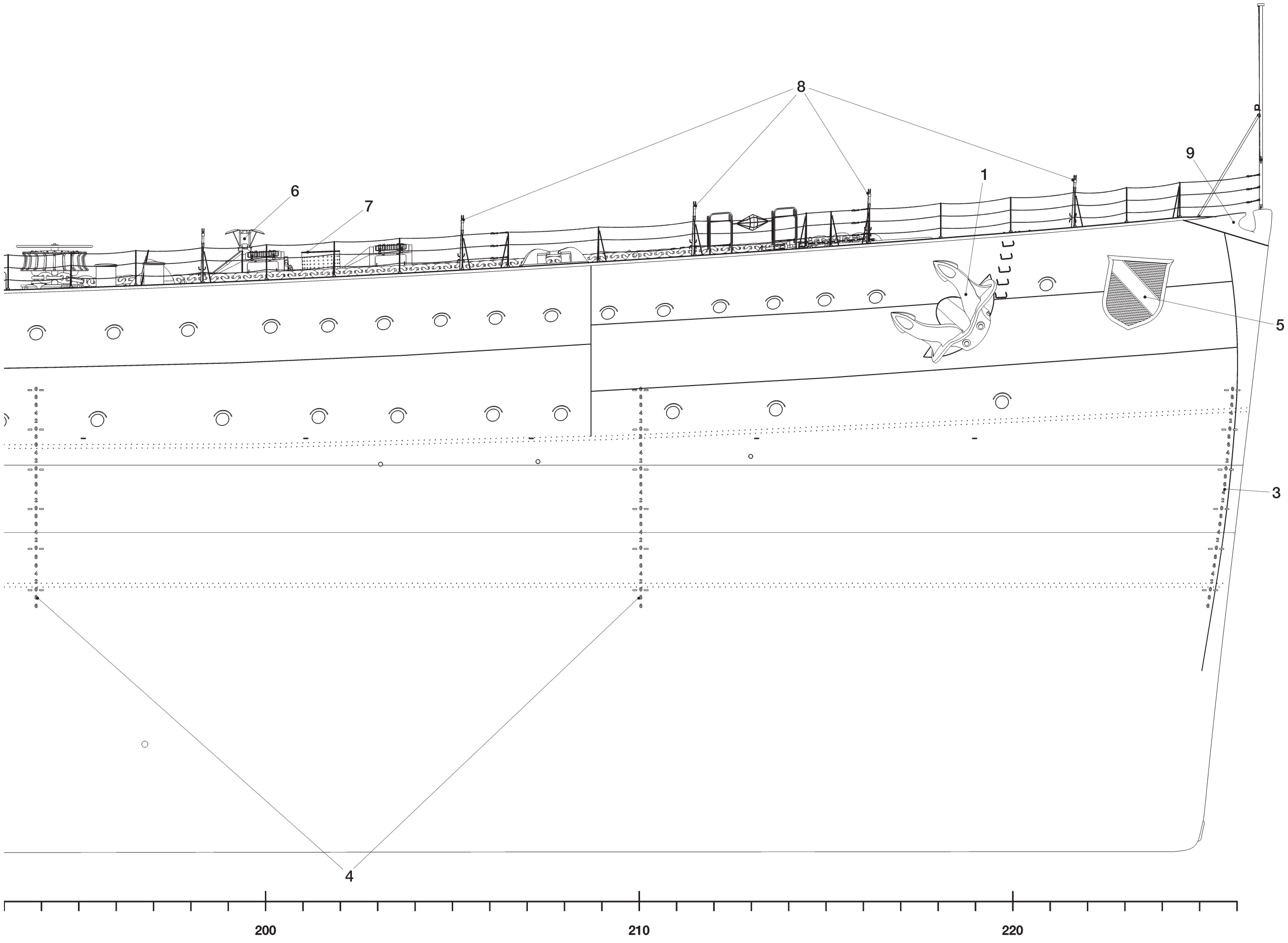

G1/1

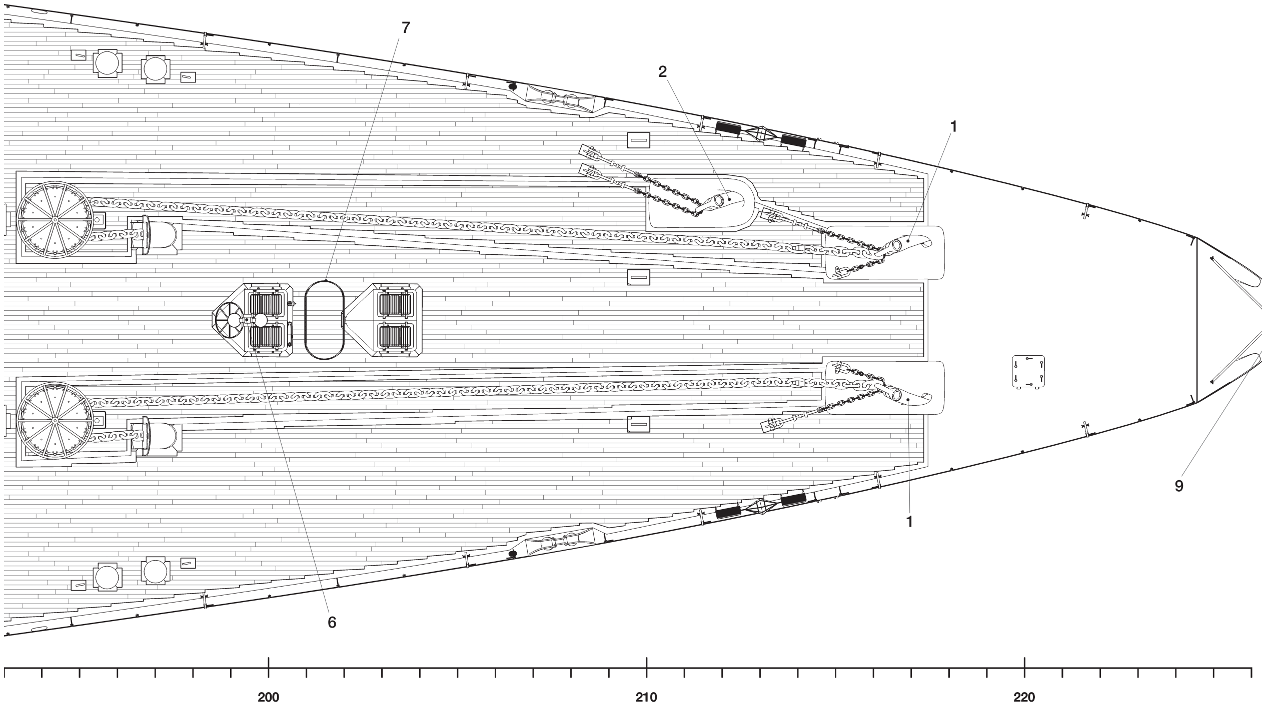

G1/3

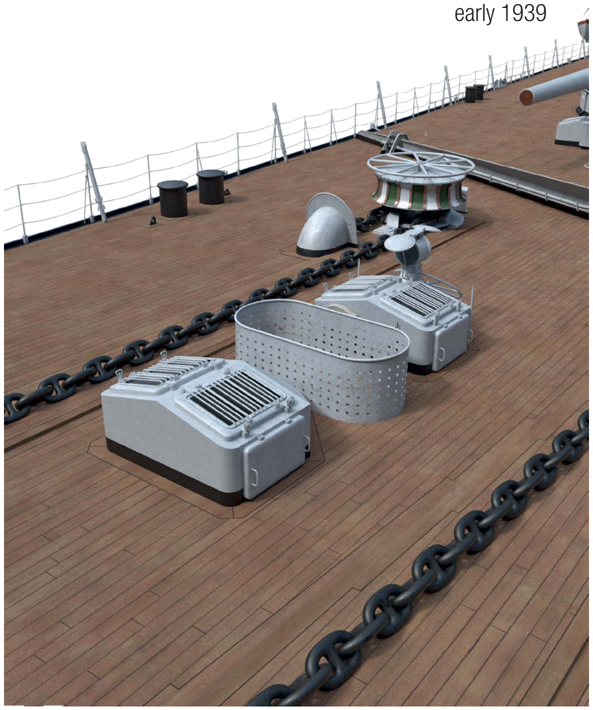

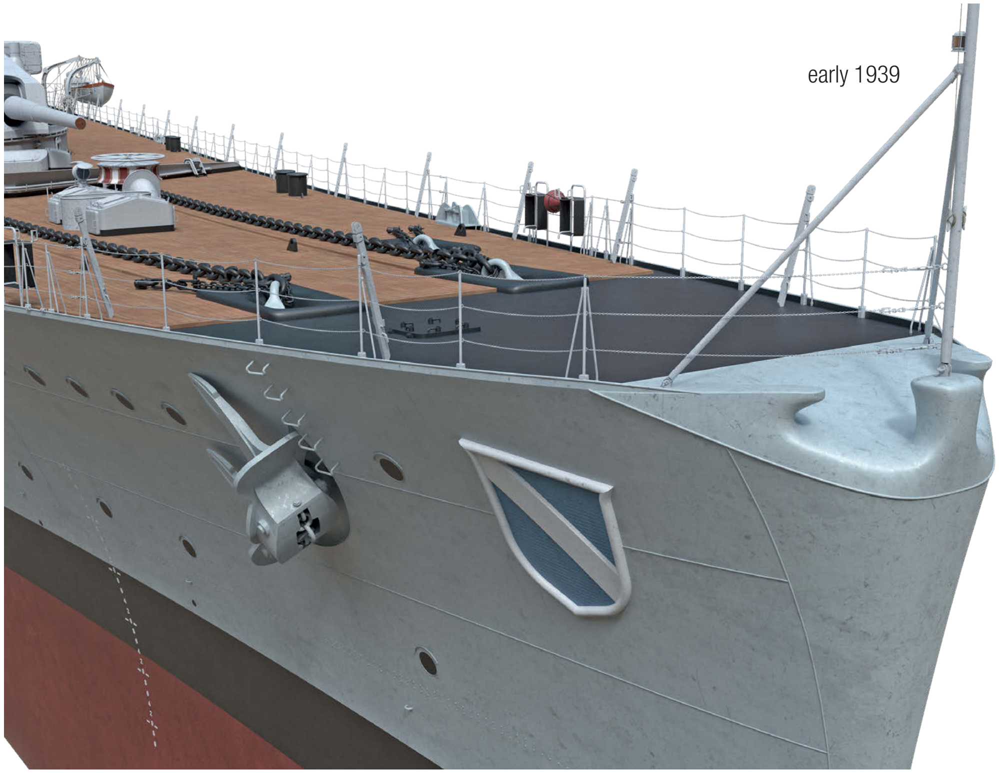

HULL AND DECK FITTINGS, FRAMES 193–226, ORIGINAL BOW FORM, EARLY 1939 (1/200 SCALE)

G1/4 FRONT VIEW

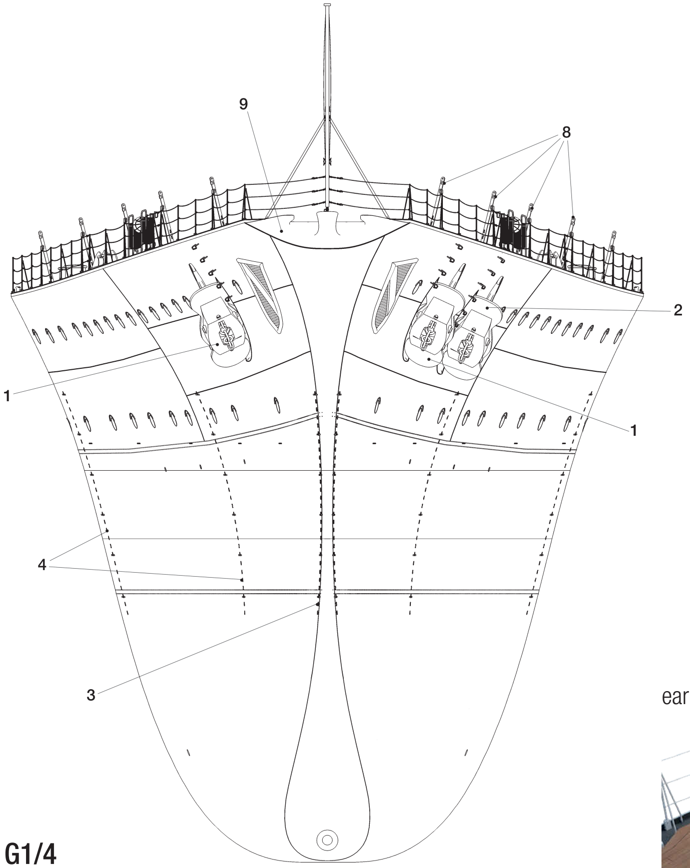

G1/4

early 1939

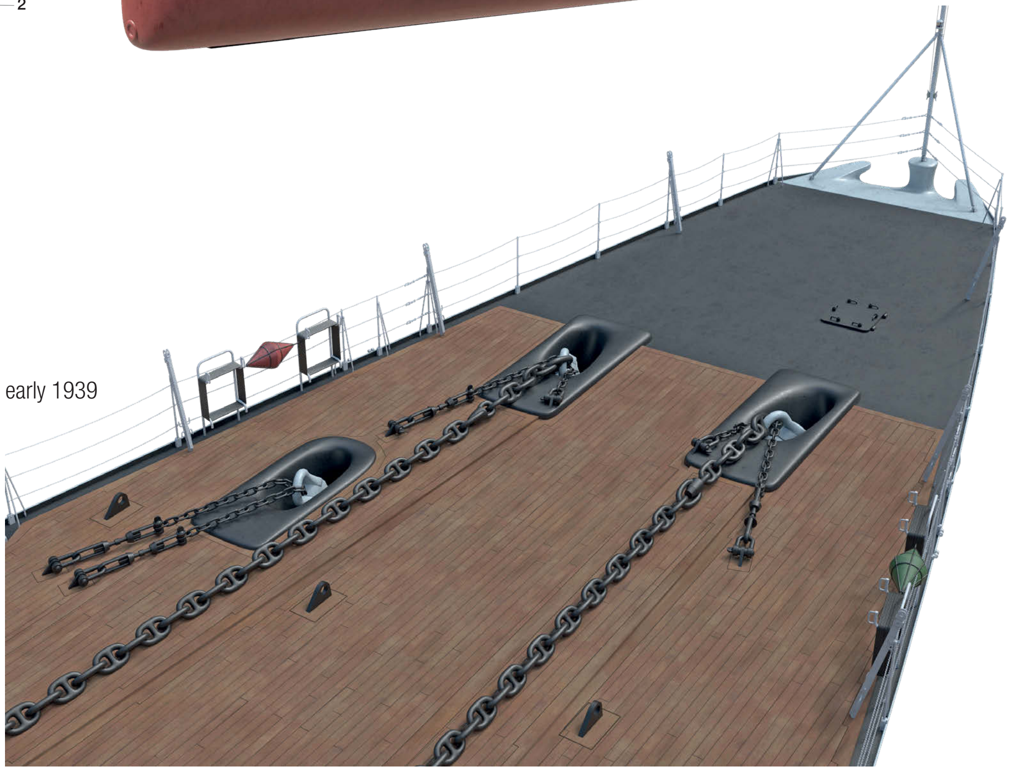

early 1939

February 1942

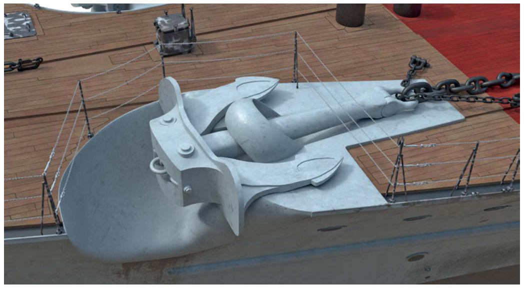

February 1942

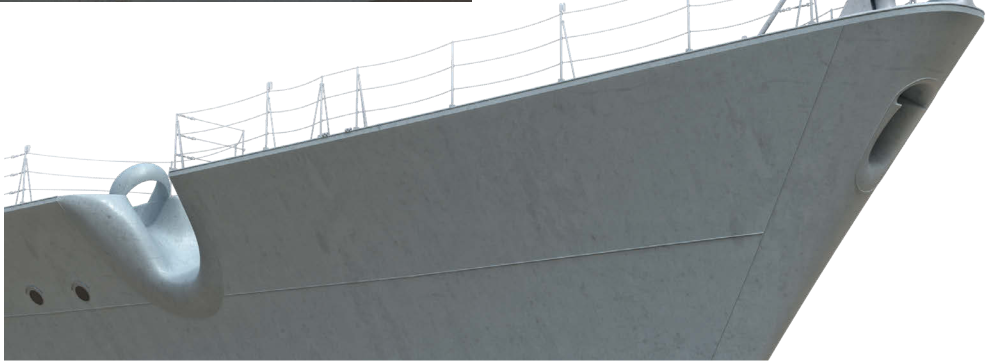

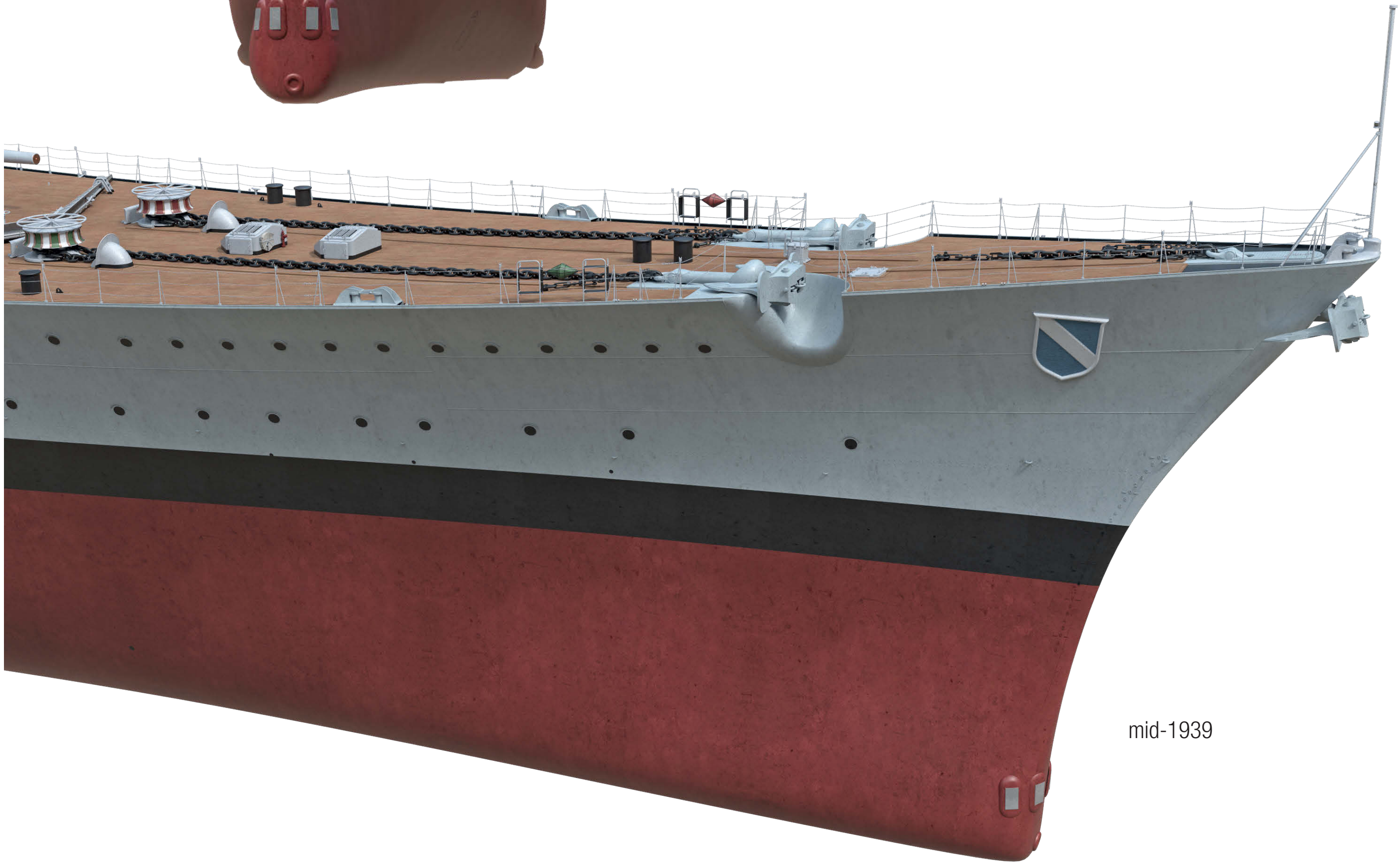

mid-1939

HULL AND DECK FITTINGS, FRAMES 193–230, AFTER BOW RECONSTRUCTION IN MID-1939 (1/200 SCALE)

G1/5 RIGHT PROFILE
G1/6 PLAN
G1/7 FRONT VIEW

G1/ 5–11 HULL AND DECK FITTINGS, FRAMES 193–230, AFTER MID-1939

1 Cover of the *Bugspiere* (paravane towing spar)
2 *Schallanlage* – active sonar (probably fitted in mid-1939)
3 Eye plate
4 NHG (*Nahbereichshorchgerät*) – torpedo detector microphone (approximate location)
5 White painted welded draught marks
6 Towing roller fairlead
7 Bow anchor (removed in September 1939)
8 Bow anchor hawse
9 Side anchor
10 Side anchor hawse pipe
11 Anchor cable
12 Cable stopper
13 Ship's crest (removed in September 1939)
14 Skylight
15 Deck hatch
16 Bollards
17 MES (*Magnetischer Eigenschutz*) – degaussing cable (added in mid-1940)
18 Anchor buoy (removed in late 1939)
19 Hinged removable platform
20 Roller fairlead
21 *Fliegersichtzeichen* (air recognition mark) – black swastika on white circle and red banner (painted after outbreak of the war, kept visible when within Luftwaffe's aircraft range; covered with tarpaulin or painted over during operations in distant waters)
22 Cable holder
23 Boot topping borders
24 Navel pipe
25 Fire hydrant
26 Bow armor riveting
27 Scupper pipe
28 Scupper
29 Removable jack staff

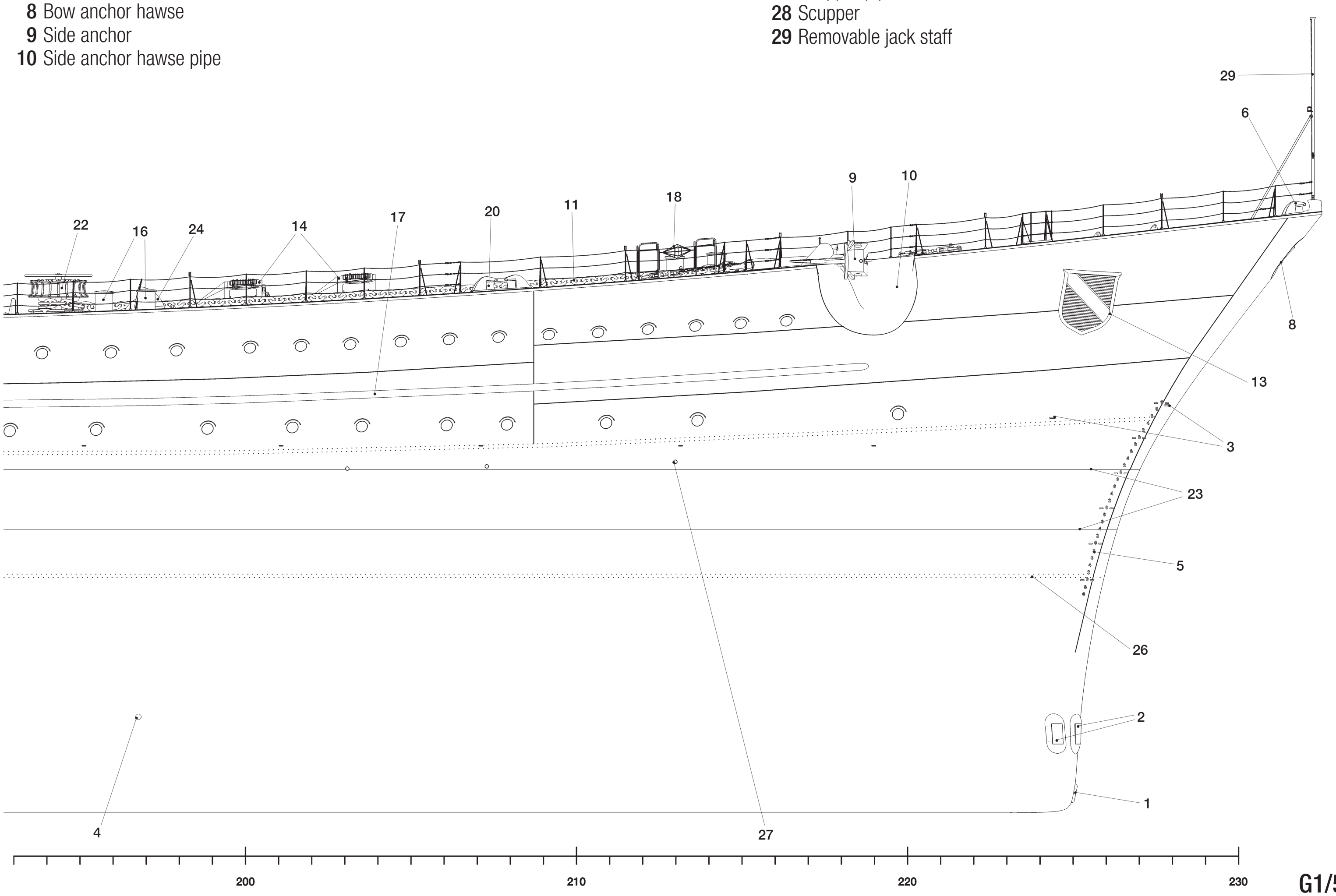

G1/5

February 1942

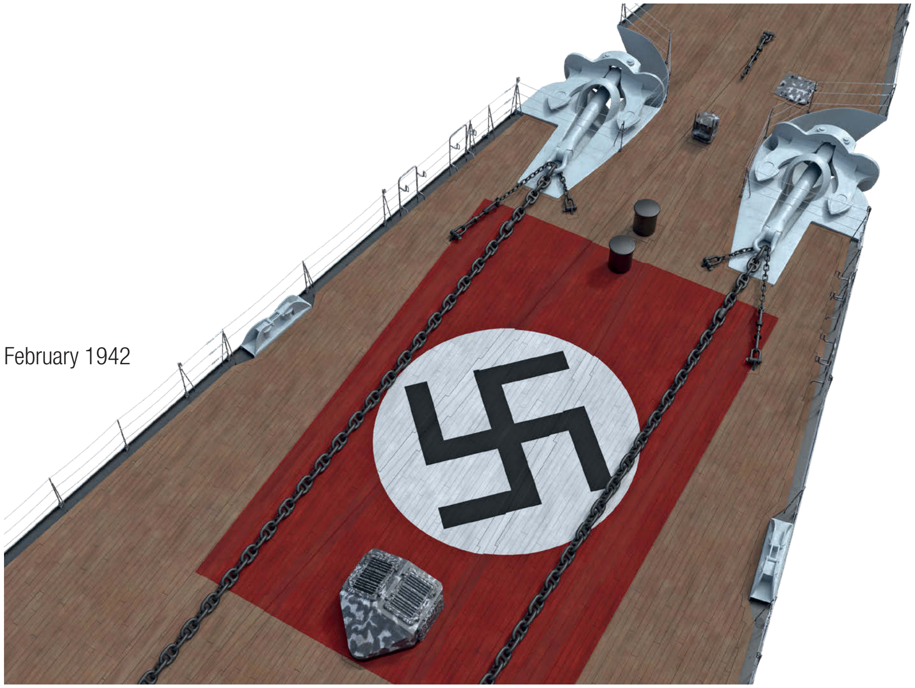

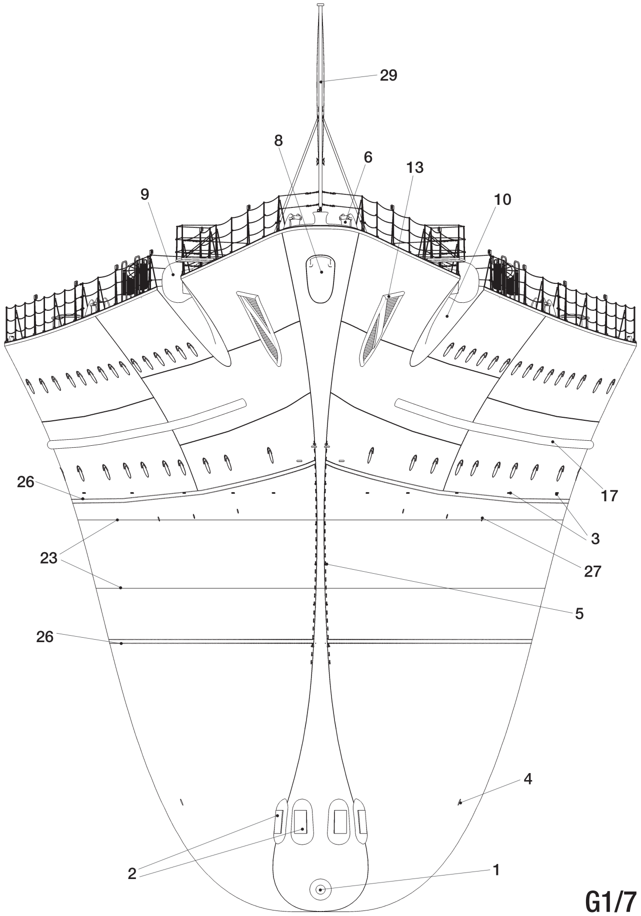

G1/7

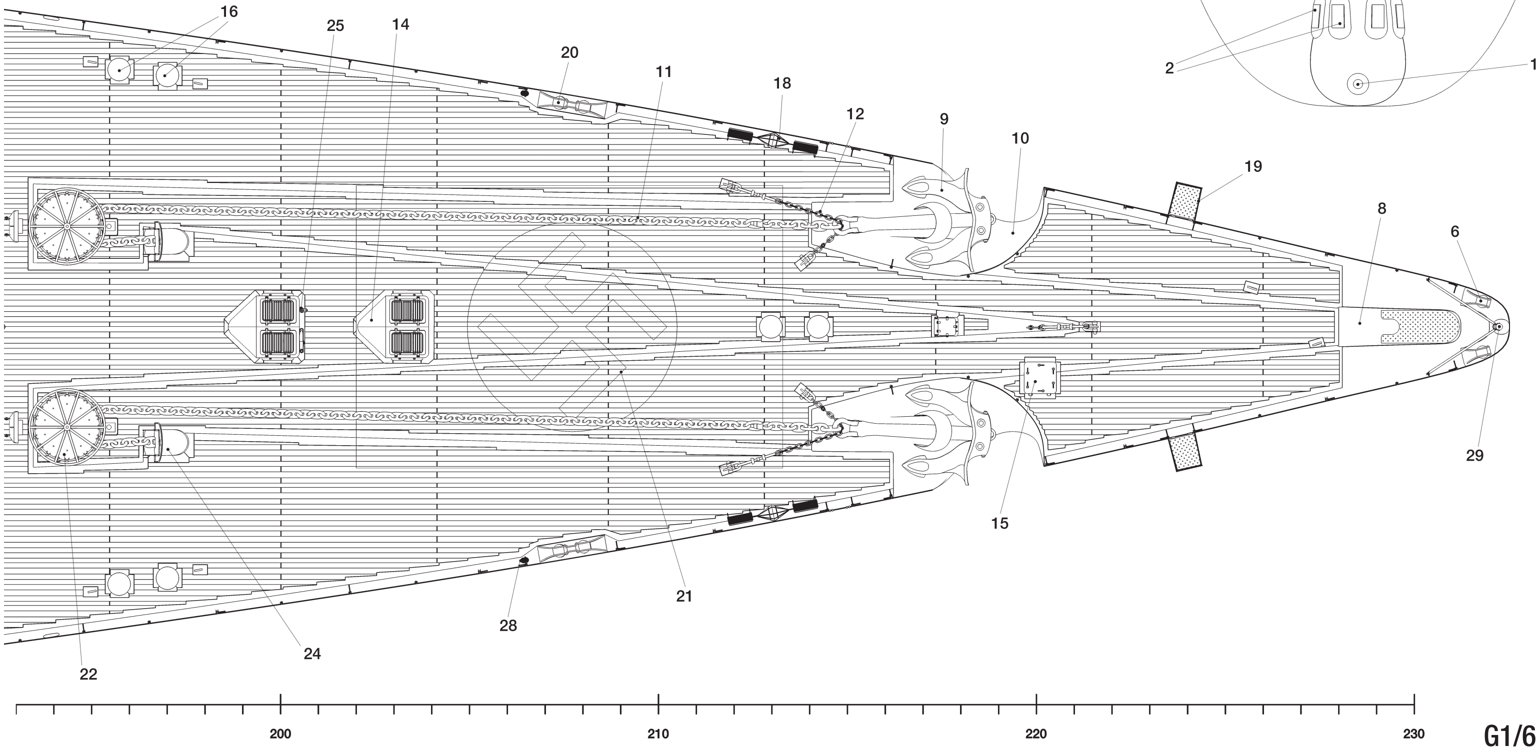

G1/6

HULL AND DECK FITTINGS, FRAMES 193–230, AFTER BOW RECONSTRUCTION IN MID-1939 (1/200 SCALE)

G1/8 RIGHT PROFILE (FRAGMENT), BOW ANCHOR PRESENT, MID-1939 TO SEPTEMBER 1939
G1/9 FRONT VIEW (FRAGMENT), BOW ANCHOR PRESENT, MID-1939 TO SEPTEMBER 1939
G1/10 FRONT VIEW (FRAGMENT), BOW ANCHOR PRESENT, MID-1939 TO SEPTEMBER 1939
G1/11 RIGHT PROFILE (FRAGMENT) – DETAIL OF DRAUGHT MARKS (1/100 SCALE)

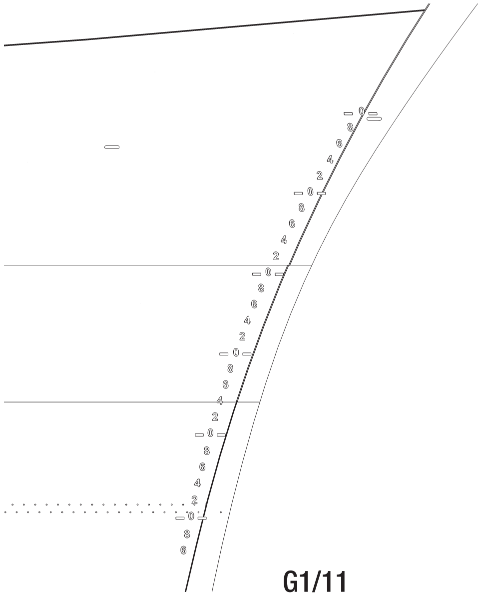

G1/11

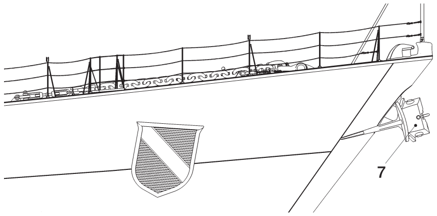

G1/8

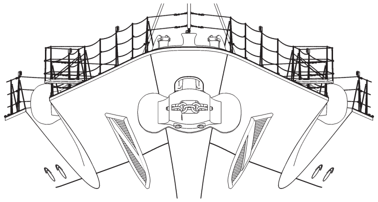

G1/9

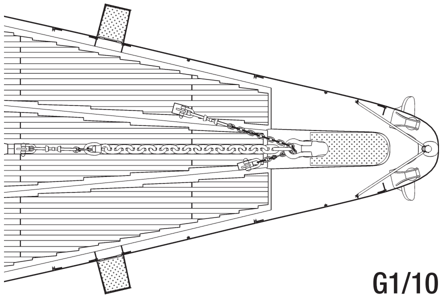

G1/10

FORE HALL-TYPE 9.5 TON STOCKLESS ANCHOR WITH ITS CABLE AND STOPPERS (1/50 SCALE)

G1/12 PROFILE
G1/13 PLAN
G1/14 FRONT VIEW
G1/15 BACK VIEW

G1/12–15 9.5 TON STOCKLESS ANCHOR WITH ITS CABLE AND STOPPERS

1 Anchor ring
2 Shank
3 Anchor head
4 Enlarged stud link
5 Standard stud link
6 Swivel
7 Joining shackle
8 Stopper lug
9 Bottle screw
10 Senhouse slip
11 Studless stopper chain link

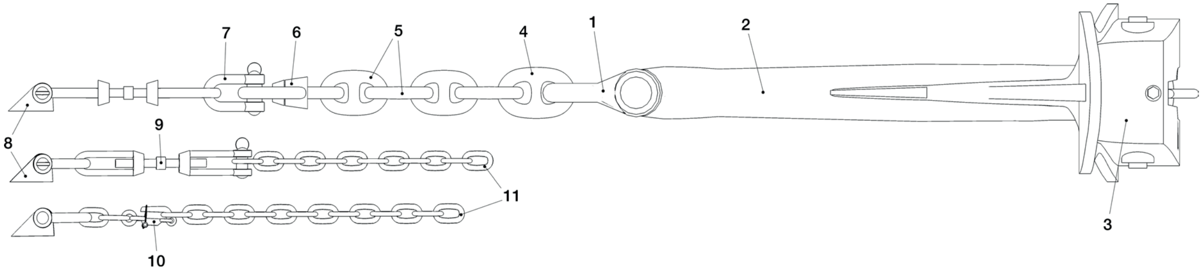

G1/12

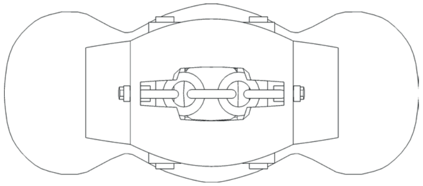

G1/14

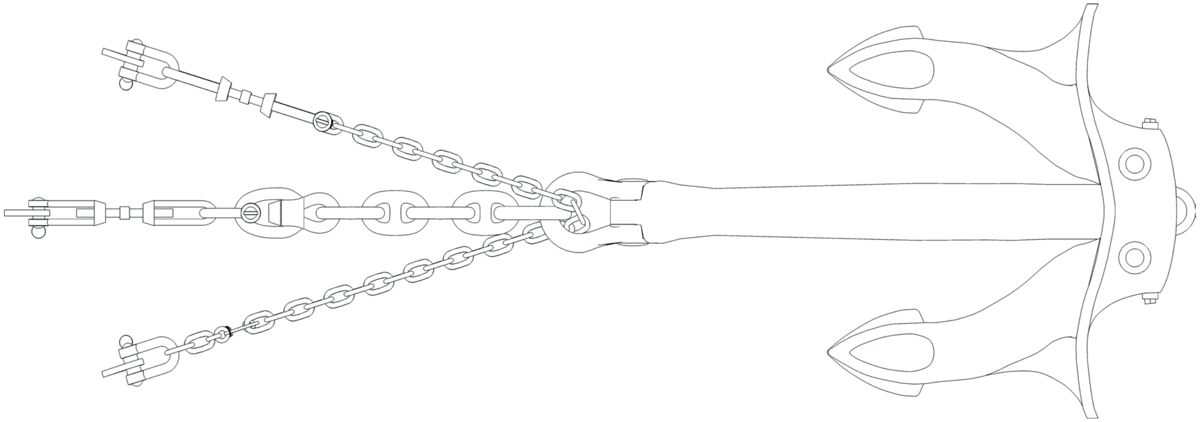

G1/13

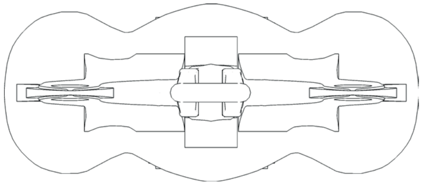

G1/15

STERN HALL-TYPE 4.75 TON STOCKLESS ANCHOR (1/50 SCALE)

G1/16 PROFILE

G1/17 PLAN

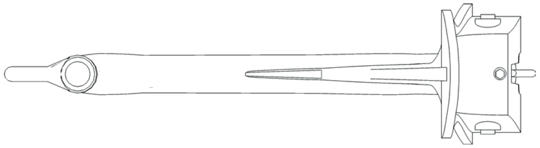

G1/16

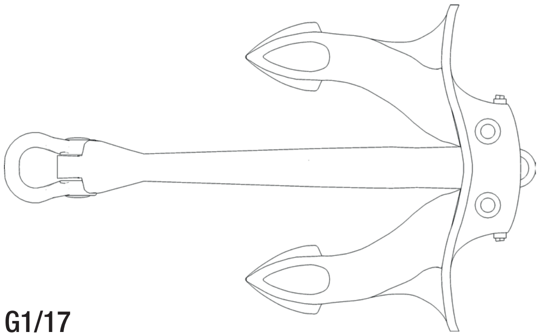

G1/17

FAIRLEADS (1/50 SCALE)

G1/18 LARGE ROLLER FAIRLEAD
G1/19 SMALL ROLLER FAIRLEAD
G1/20 SMALL FAIRLEAD

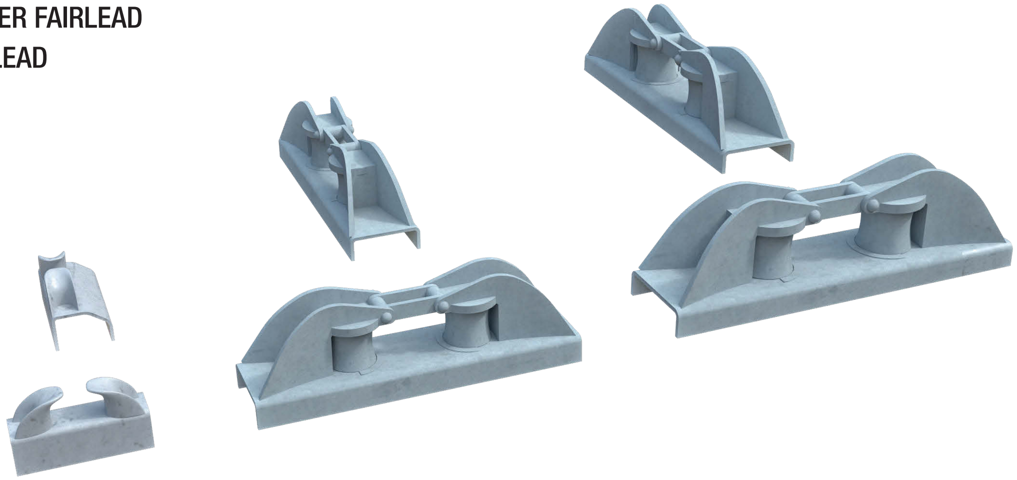

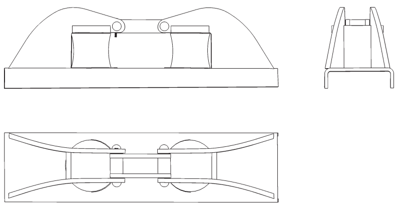

G1/18

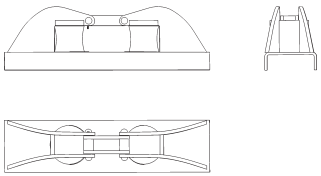

G1/19

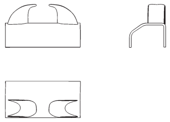

G1/20

BOLLARDS (1/50 SCALE)

G1/21 LARGE BOLLARDS
G1/22 MEDIUM BOLLARDS
G1/23 SMALL BOLLARDS

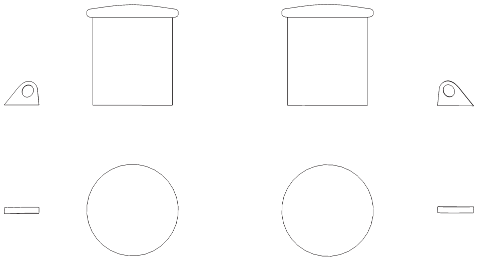

G1/21

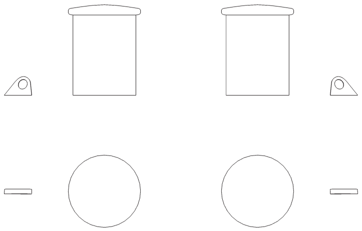

G1/22

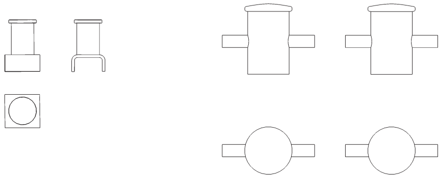

G1/23

HINGED REMOVABLE PLATFORM (1/50 SCALE)

G1/24 PROFILE
G1/25 BACK VIEW
G1/26 PLAN

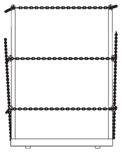

G1/24

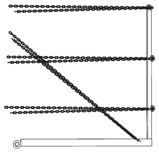

G1/25

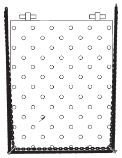

G1/26

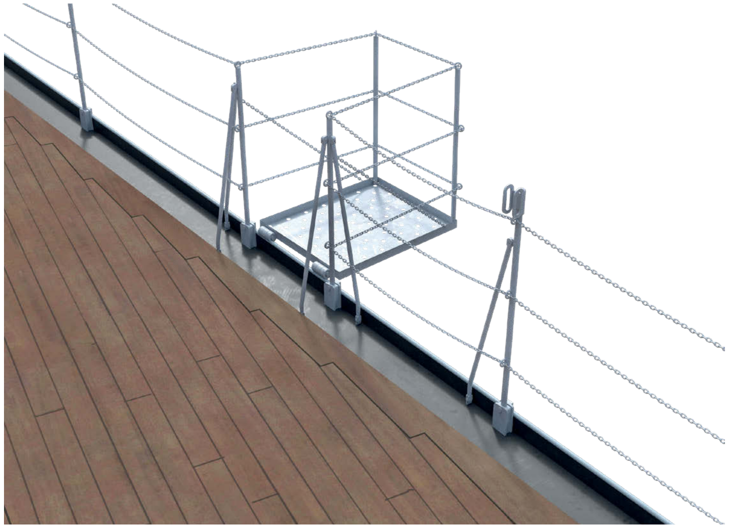

ANCHOR BUOY – STARBOARD IN GREEN COLOR, PORT IN RED COLOR (1/50 SCALE)

G1/27 PROFILE
G1/28 PLAN
G1/29 BACK VIEW

early 1939

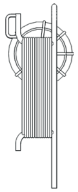

G1/29

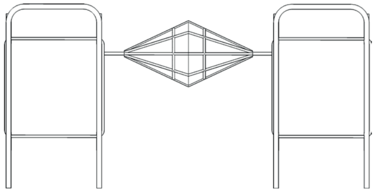

G1/27

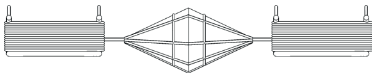

G1/28

GUARD RAILS (FOLDED WHEN MAIN ARTILLERY WAS GOING INTO ACTION) (1/40 SCALE)

G1/30 PROFILE
G1/31 PLAN
G1/32 BACK VIEW

G1/30–32 GUARD RAILS

1 Guard rail chain
2 Bottle screw and slip
3 Standard stanchion
4 Stanchion with a single stay
5 Stanchions with two perpendicular stays
6 Stanchion with awning stanchion support frame
7 Stanchion with awning stanchion attached (before mid-1939 only)

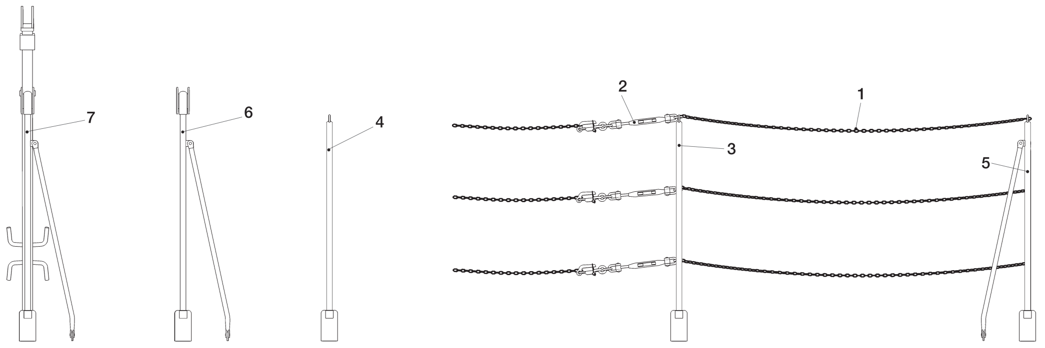

G1/30

G1/31

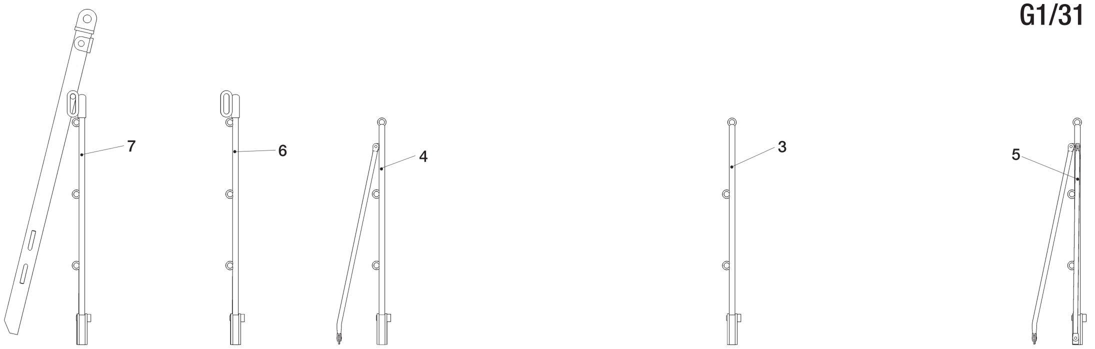

G1/32

FIREFIGHTING GEAR (1/25 SCALE)

G1/33 STOWED FIRE HOSE AND FIRE HOSE NOZZLE
G1/34 VARIOUS FIRE HYDRANTS

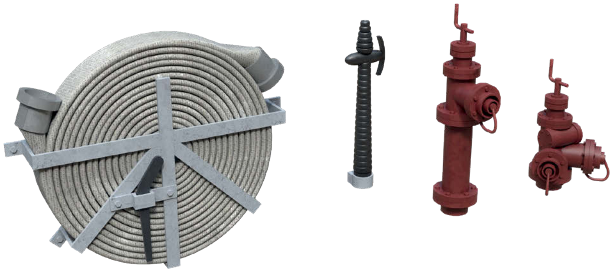

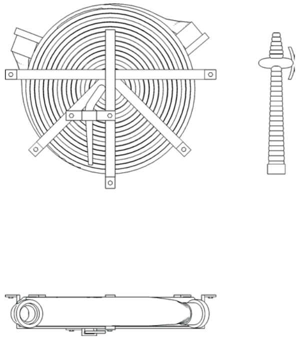

G1/33

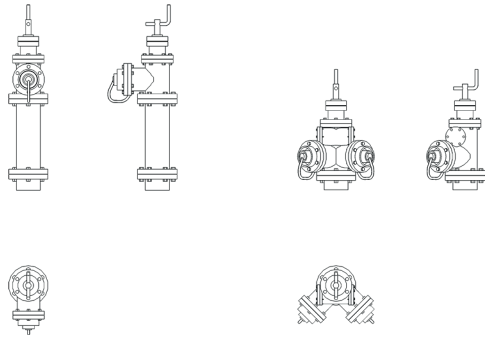

G1/34

CABLE HOLDER (1/50 SCALE)

G1/35 PROFILE
G1/36 FRONT VIEW
G1/37 BACK VIEW
G1/38 PLAN

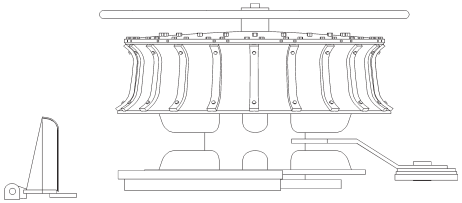

G1/35

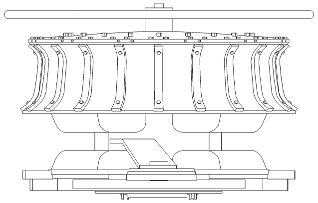

G1/36

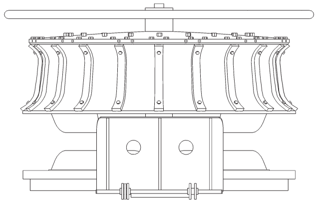

G1/37

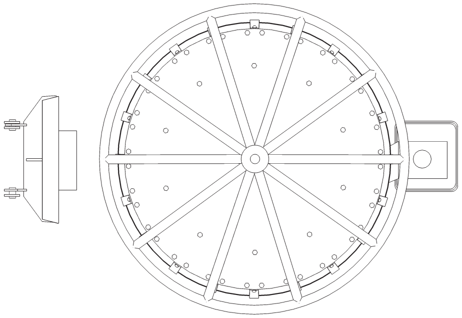

G1/38

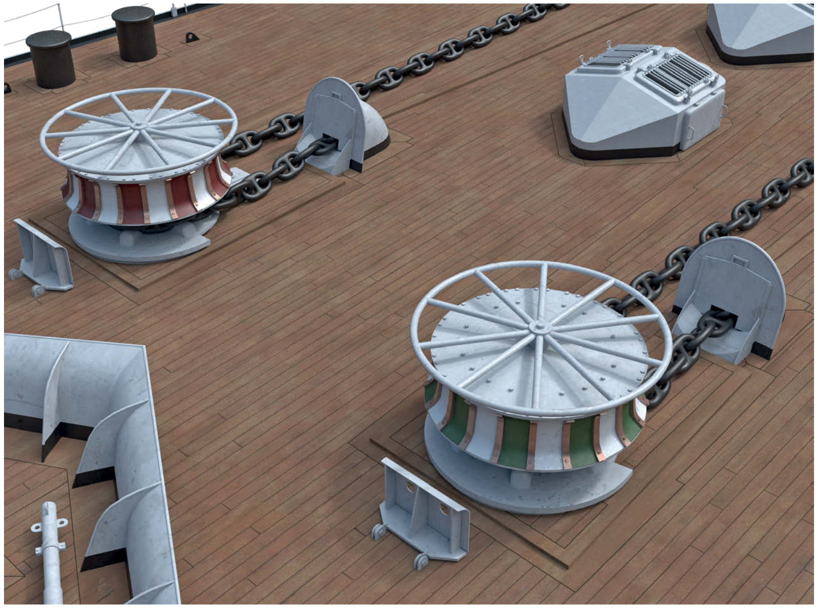

NAVEL PIPE (1/50 SCALE)

G1/39 PROFILE
G1/40 BACK VIEW
G1/41 PLAN

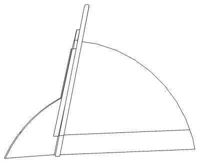

G1/39

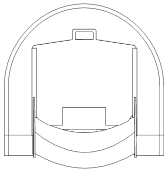

G1/40

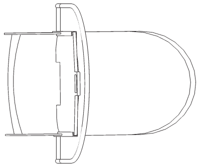

G1/41

SKYLIGHTS (1/50 SCALE)

G1/42 SKYLIGHT TYPE 1 (OPENED)
G1/43 SKYLIGHT TYPE 1 (CLOSED)
G1/44 SKYLIGHT TYPE 2 (OPENED)
G1/45 SKYLIGHT TYPE 2 (CLOSED)
G1/46 SKYLIGHT TYPE 3 (OPENED)
G1/47 SKYLIGHT TYPE 4 (OPENED)

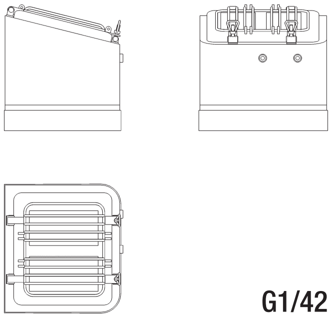
G1/42

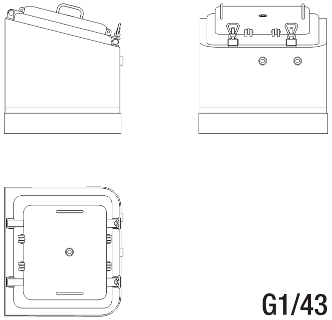
G1/43

February 1942

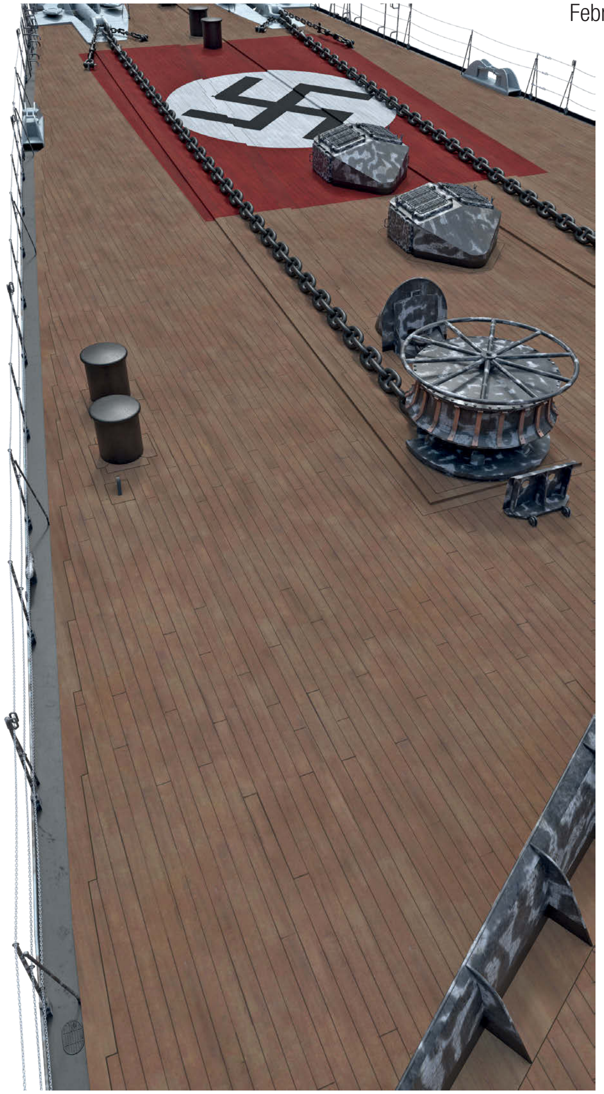

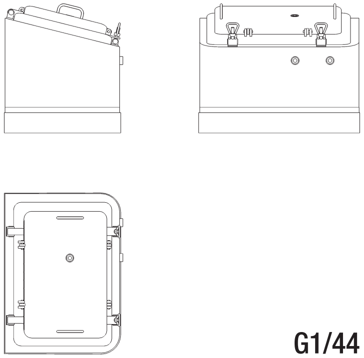
G1/44

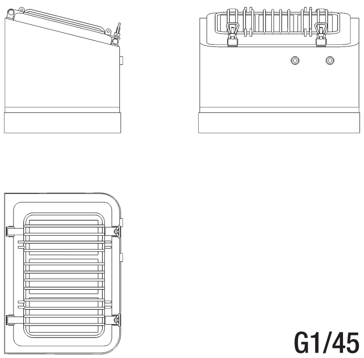
G1/45

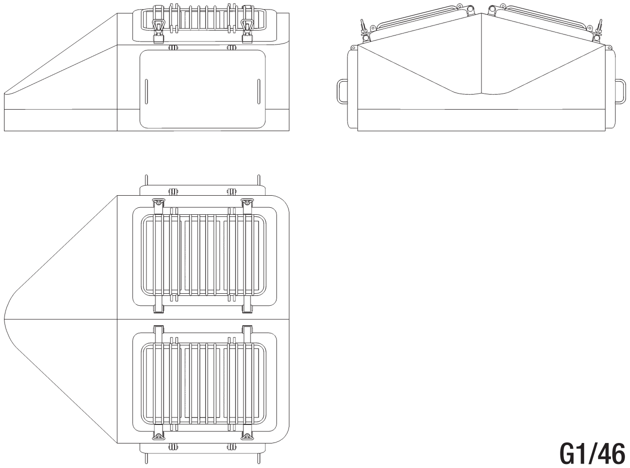

G1/46

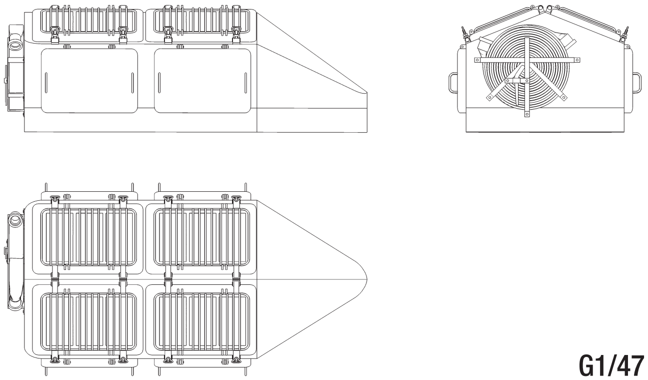

G1/47

G1/48 DECK GEAR BASKET (1/50 SCALE)

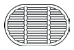

G1/49

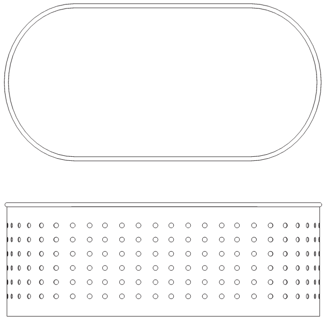

G1/48

SCUPPER (1/25 SCALE)

G1/49 PLAN

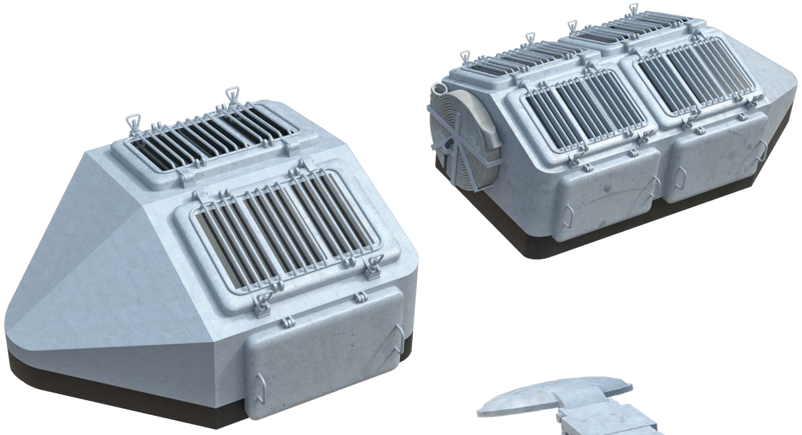

LOUDSPEAKER (1/50 SCALE)

G1/50 PROFILE

G1/51 FRONT VIEW

G1/52 PLAN

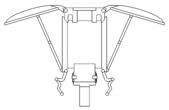

G1/50

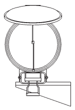

G1/51

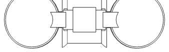

G1/52

HULL AND DECK FITTINGS, FRAMES 154–193, EARLY 1939 (1/200 SCALE)

G2/1 RIGHT PROFILE (FRAGMENT)

G2/2 PLAN (FRAGMENT)

G2/1–2 HULL AND DECK FITTINGS, FRAMES 154–193, EARLY 1939

1 Awning stanchion (removed in mid-1939)
2 Wire rope reel under canvas cover (relocated in late 1939)
3 Forecastle breakwater (original form)
4 Stowed fore boat boom (original location)

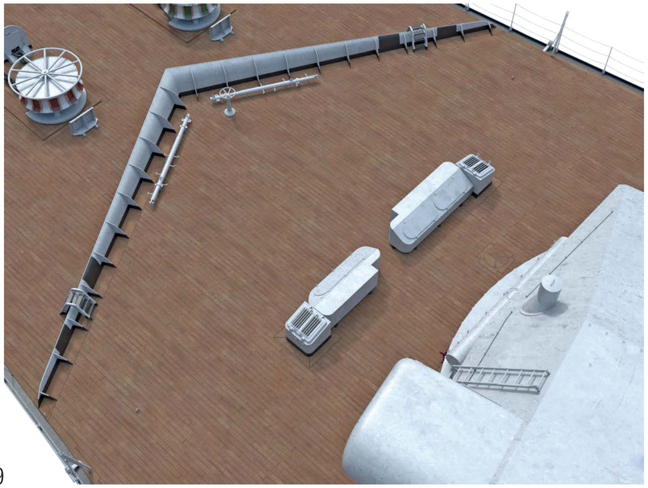

early 1939

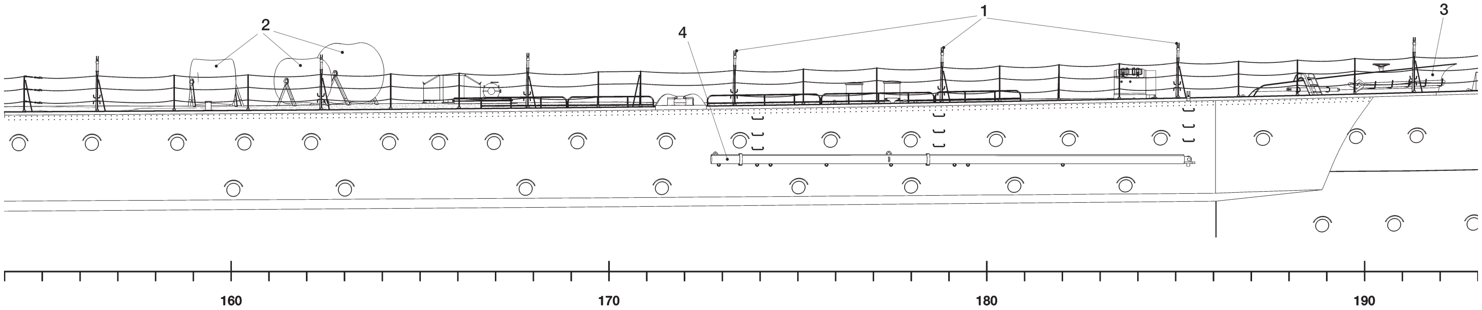

G2/1

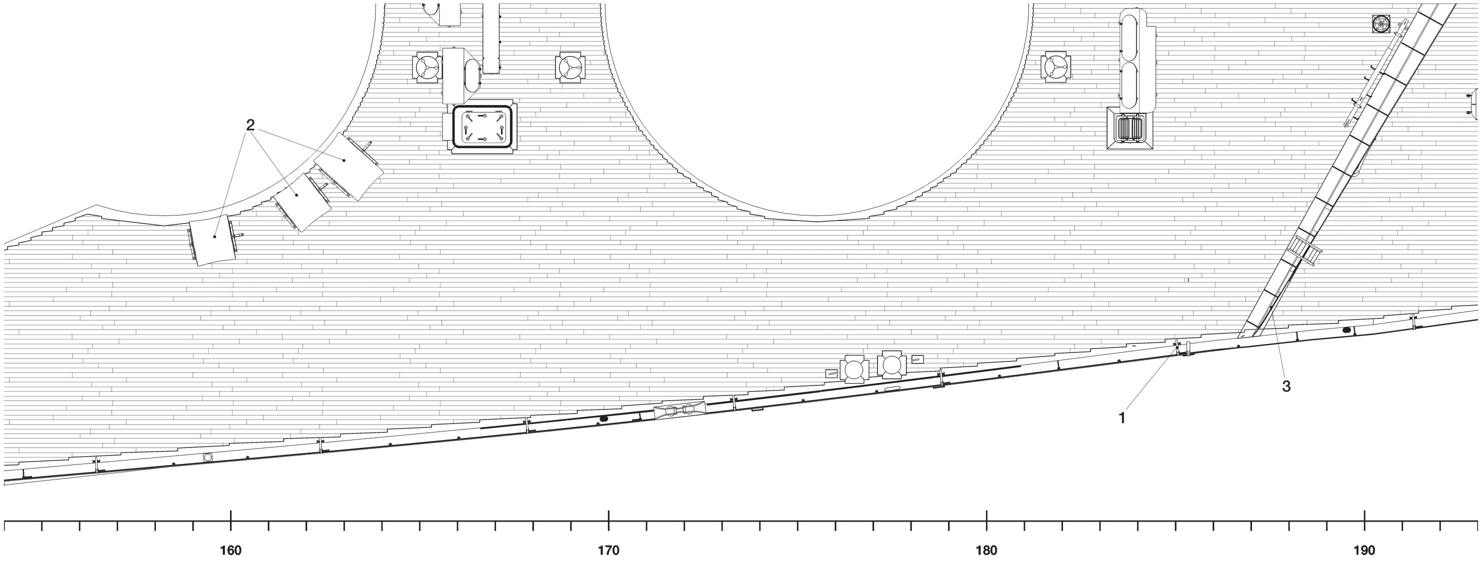

G2/2

early 1939

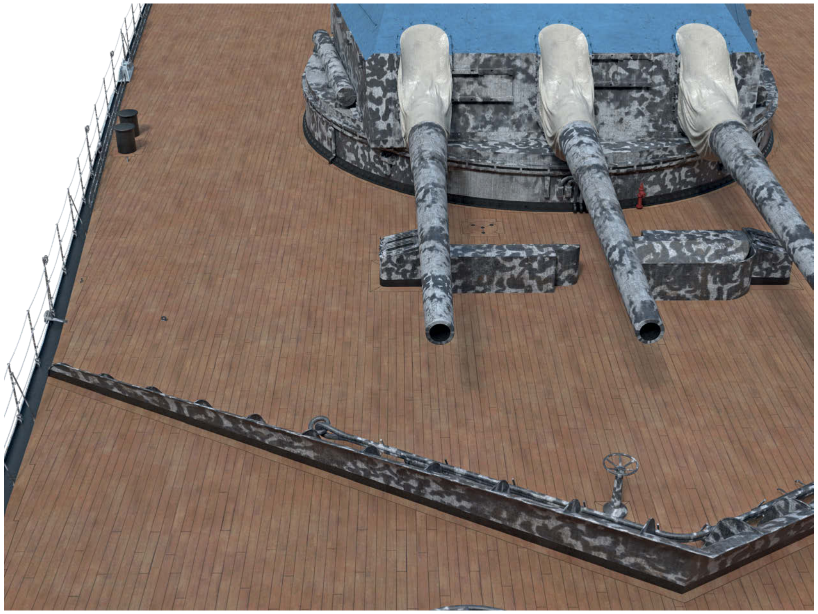

February 1942

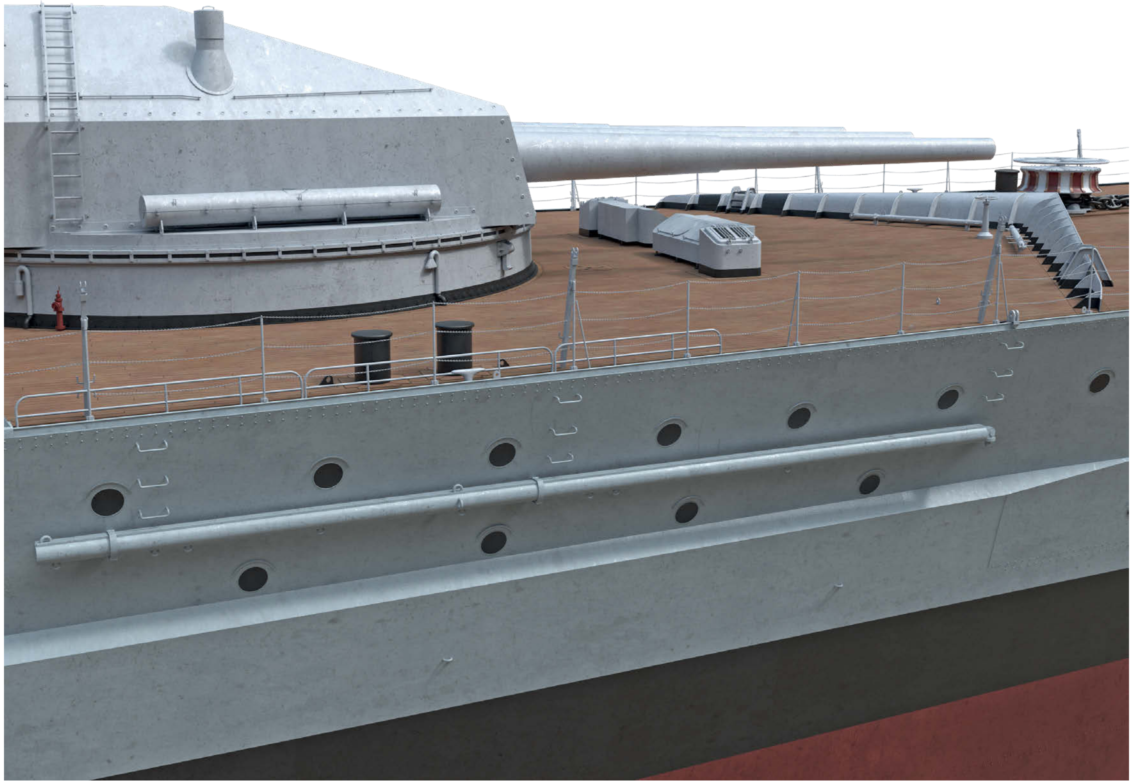

early 1939

HULL AND DECK FITTINGS, FRAMES 154–193, AFTER MID-1939 (1/200 SCALE)

G2/3 RIGHT PROFILE

G2/4 PLAN

September 1943

G2/3–4 HULL AND DECK FITTINGS, FRAMES 154–193, AFTER MID-1939

1 Stowed fore boat boom (position raised in mid-1939)
2 Forecastle breakwater (modified in mid-1941)
3 Boat boom mast attachment point
4 Barrier preventing empty 28cm shell cases from falling overboard
5 Additional barrier (fitted around late 1941)
6 Vent (modified around mid-1941)
7 Main artillery sub-calibre barrel container
8 Deck hatch
9 28cm ammunition magazine loading point
10 Skylight
11 Boat boom mast (stowed)
12 GHG (*Gruppenhorchgerät*) – microphone array for acoustic propeller detection (approximate location)
13 Torpedo bulkhead riveting
14 MES (*Magnetischer Eigenschutz*) – degaussing cable (added in mid-1940)
15 Main armour belt edge
16 Barbette of main artillery turret Anton
17 Barbette of main artillery turret Bruno

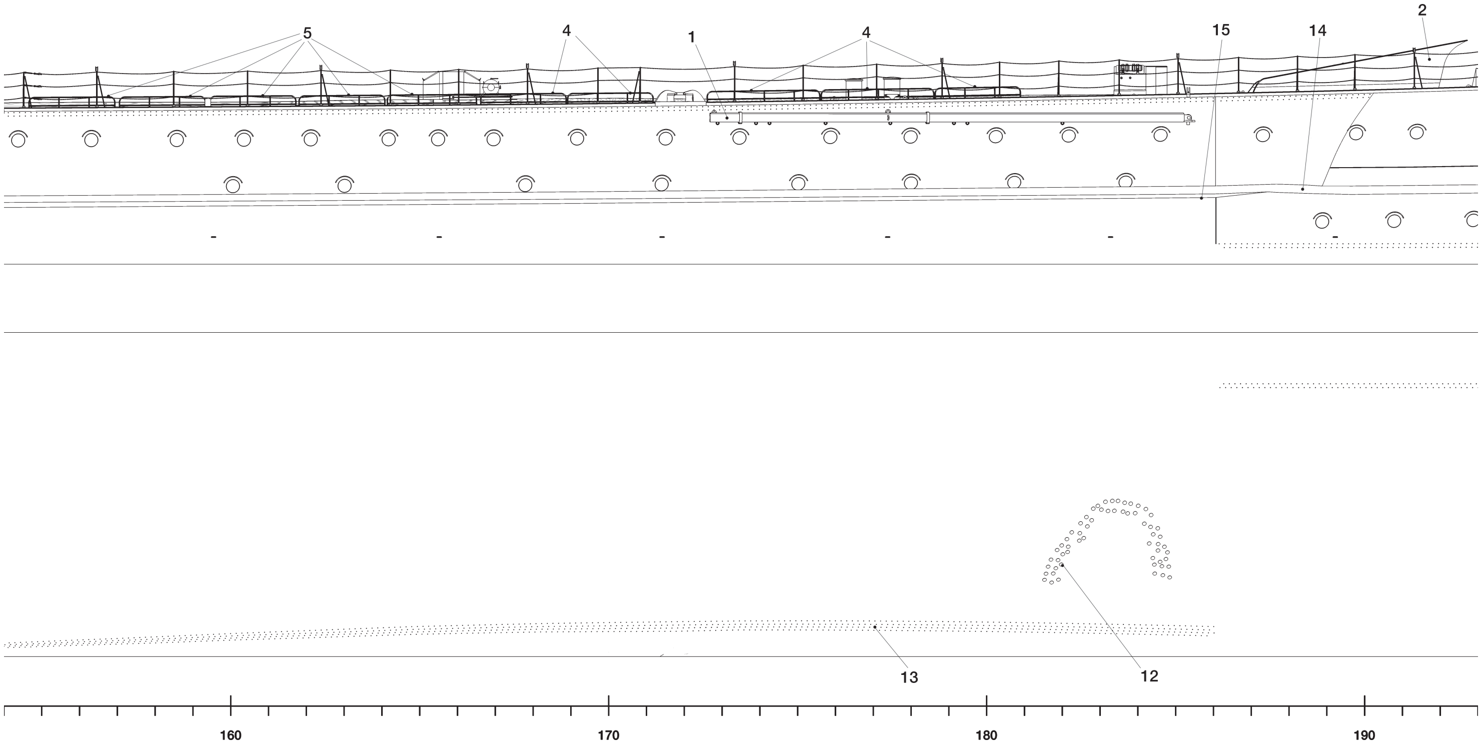

G2/3

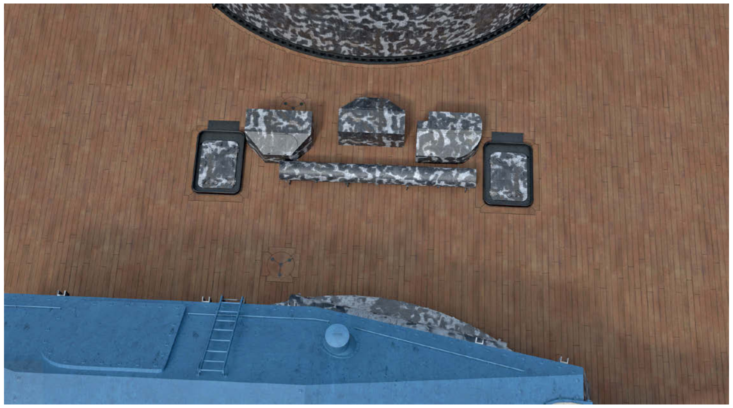

February 1942

February 1942

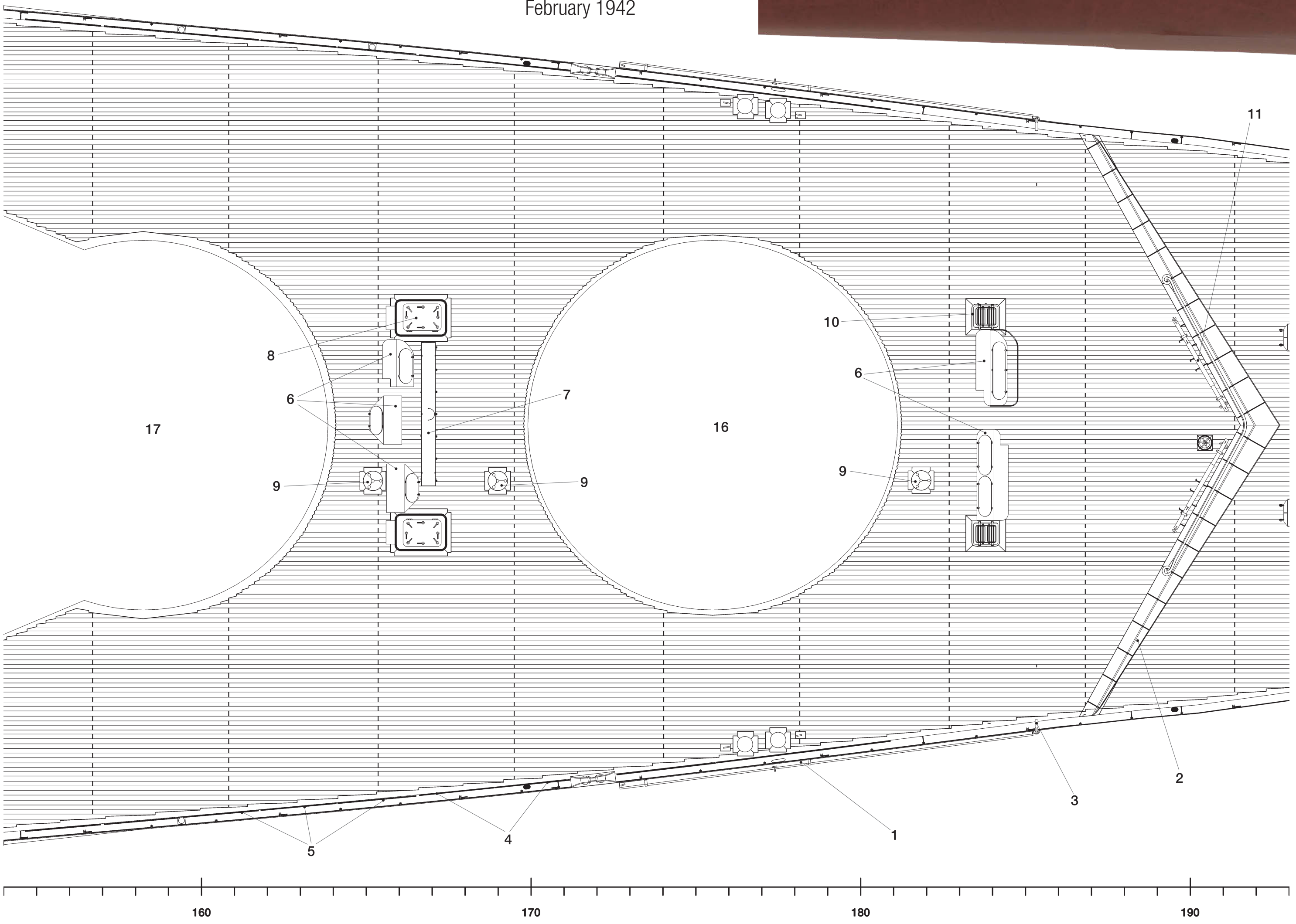

G2/4

FORECASTLE BREAKWATER, ORIGINAL FORM (1/100 SCALE)

G2/5 PROFILE
G2/6 FRONT VIEW
G2/7 BACK VIEW
G2/8 PLAN

FORECASTLE BREAKWATER, AFTER MODIFICATION AROUND MID-1941 (1/100 SCALE)

G2/9 PROFILE
G2/10 BACK VIEW
G2/11 PLAN

VENTS AT FRAME 184, ORIGINAL FORM (1/100 SCALE)

G2/12 RIGHT PROFILE
G2/13 FRONT VIEW
G2/14 PLAN

VENTS AT FRAME 184, AFTER MODIFICATION AROUND MID-1941 (1/100 SCALE)

G2/15 RIGHT PROFILE
G2/16 PLAN

VENTS AT FRAME 166, ORIGINAL FORM (1/100 SCALE)

G2/17 RIGHT PROFILE
G2/18 FRONT VIEW
G2/19 PLAN

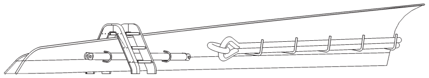
G2/5

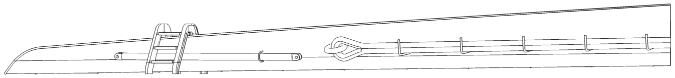
G2/6

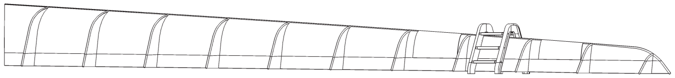
G2/7

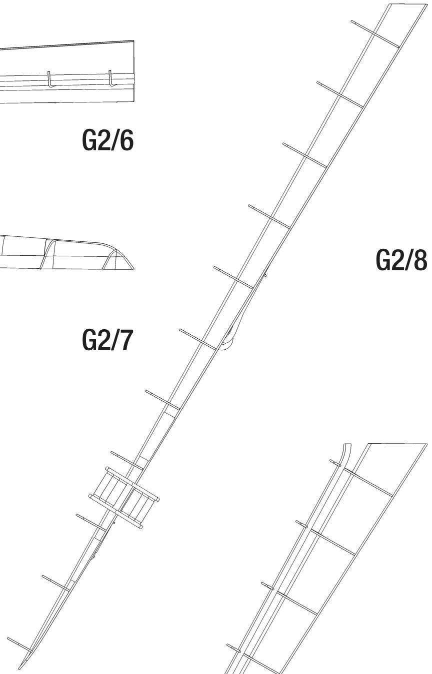
G2/8

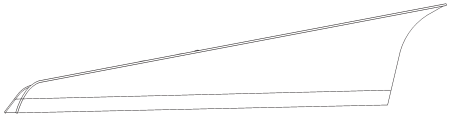
G2/9

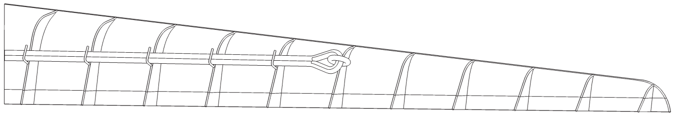
G2/10

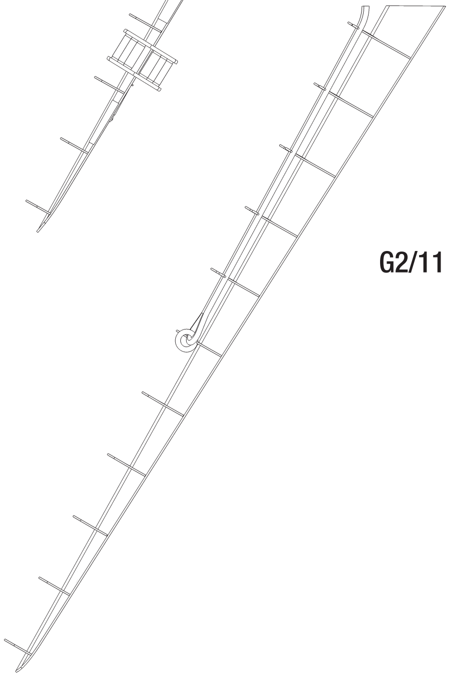
G2/11

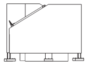
G2/12

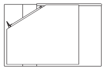
G2/15

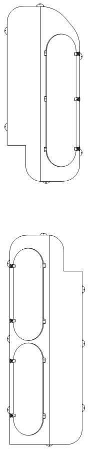
G2/14

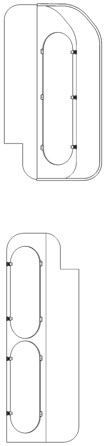
G2/16

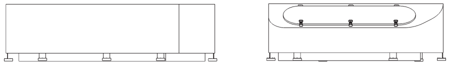
G2/13

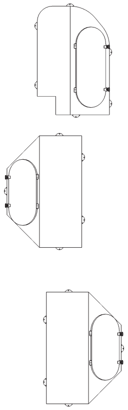
G2/19

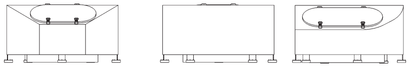
G2/18

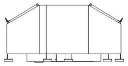
G2/17

VENTS AT FRAME 166, AFTER MODIFICATION AROUND MID-1941 (1/100 SCALE)

G2/20 FRONT VIEW

MAIN ARTILLERY SUB-CALIBRE BARREL CONTAINER (1/50 SCALE)

G2/21 PROFILE, FRONT VIEW AND PLAN

DECK HATCH (1/50 SCALE)

G2/22 PROFILE (HATCH CLOSED)

G2/23 PLAN (HATCH CLOSED)

G2/24 RIGHT PROFILE (HATCH OPEN)

G2/25 LEFT PROFILE (HATCH OPEN)

G2/26 BACK VIEW (HATCH OPEN)

G2/27 PLAN (HATCH OPEN)

ROPE REELS (1/50 SCALE)

G2/28 LARGE REEL (SHOWN ALSO WITH CANVAS COVER)

G2/29 SMALL REEL

G2/20

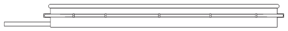

G2/22

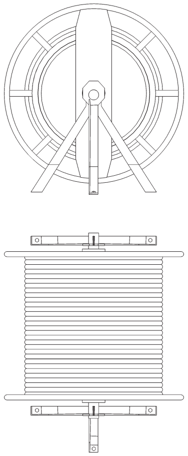

G2/29

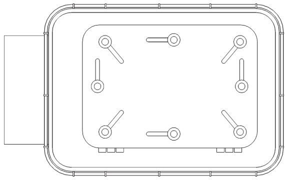

G2/23

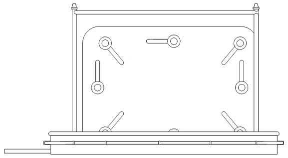

G2/24

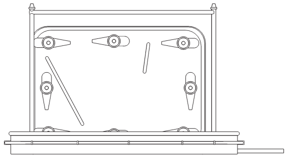

G2/25

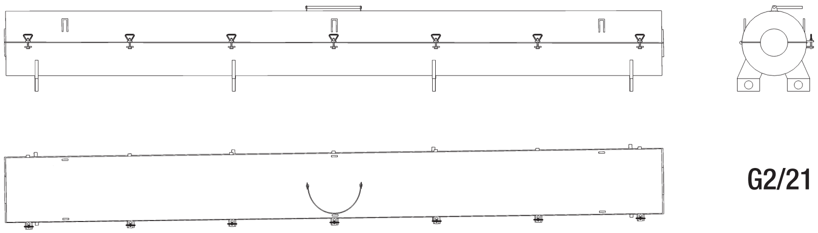

G2/21

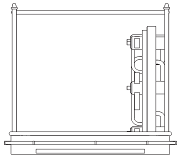

G2/26

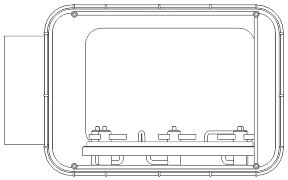

G2/27

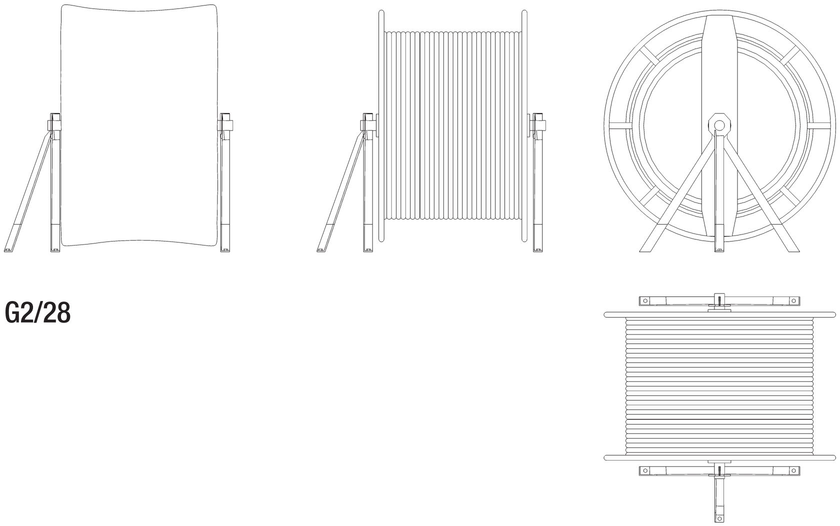

G2/28

HULL AND DECK FITTINGS, FRAMES 110–154, EARLY 1939 (1/200 SCALE)

G3/1 RIGHT PROFILE (FRAGMENT)
G3/2 PLAN (STARBOARD SIDE FRAGMENT)
G3/3 PLAN (PORT SIDE FRAGMENT)

G3/1–3 HULL AND DECK FITTINGS, FRAMES 110–154, EARLY 1939

1 Breakwater (original form)
2 Twin 3.7cm mount shield (original form)
3 Ready-to-use 8.5m cutter on davits (removed around September 1939)
4 Water taps

February 1942

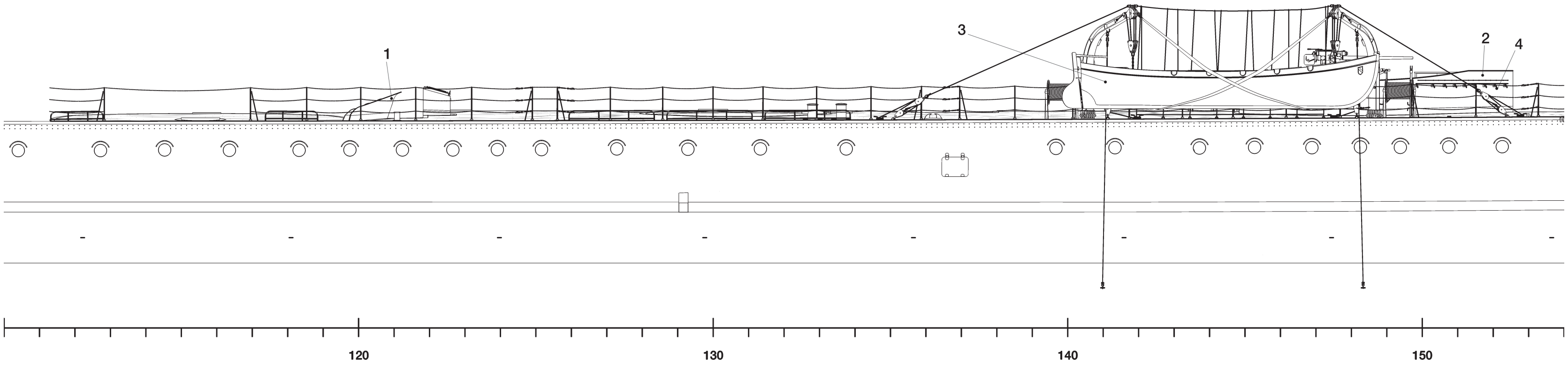

G3/1

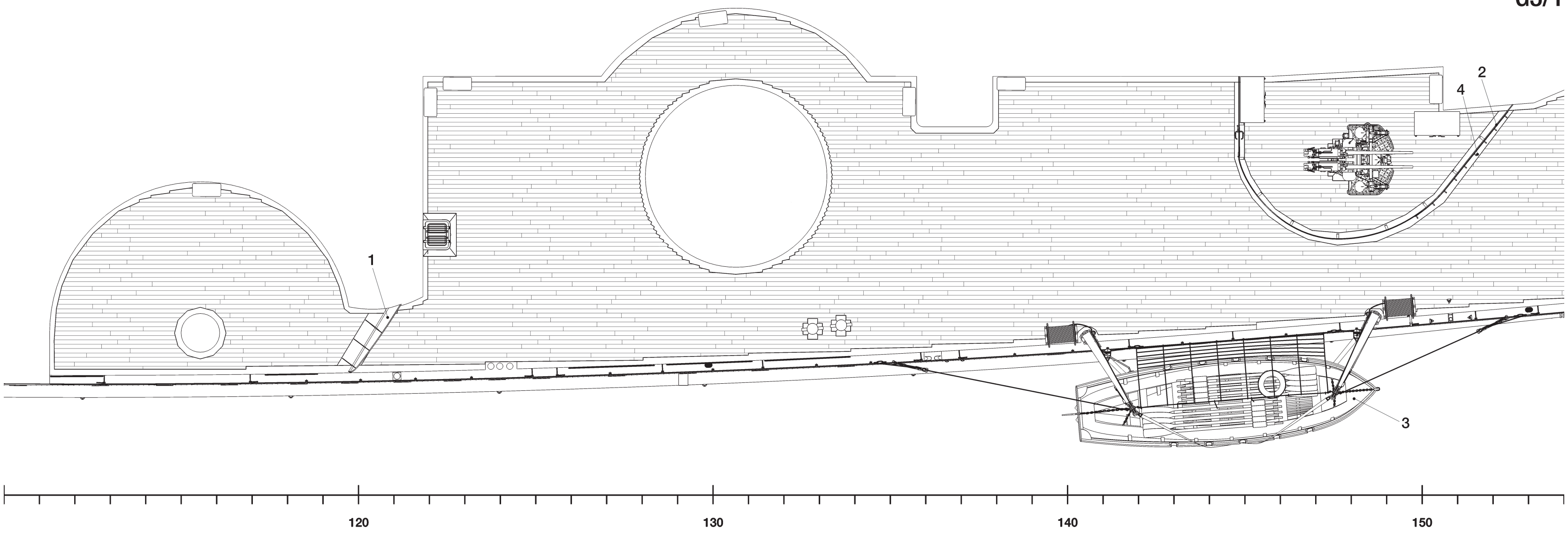

G3/2

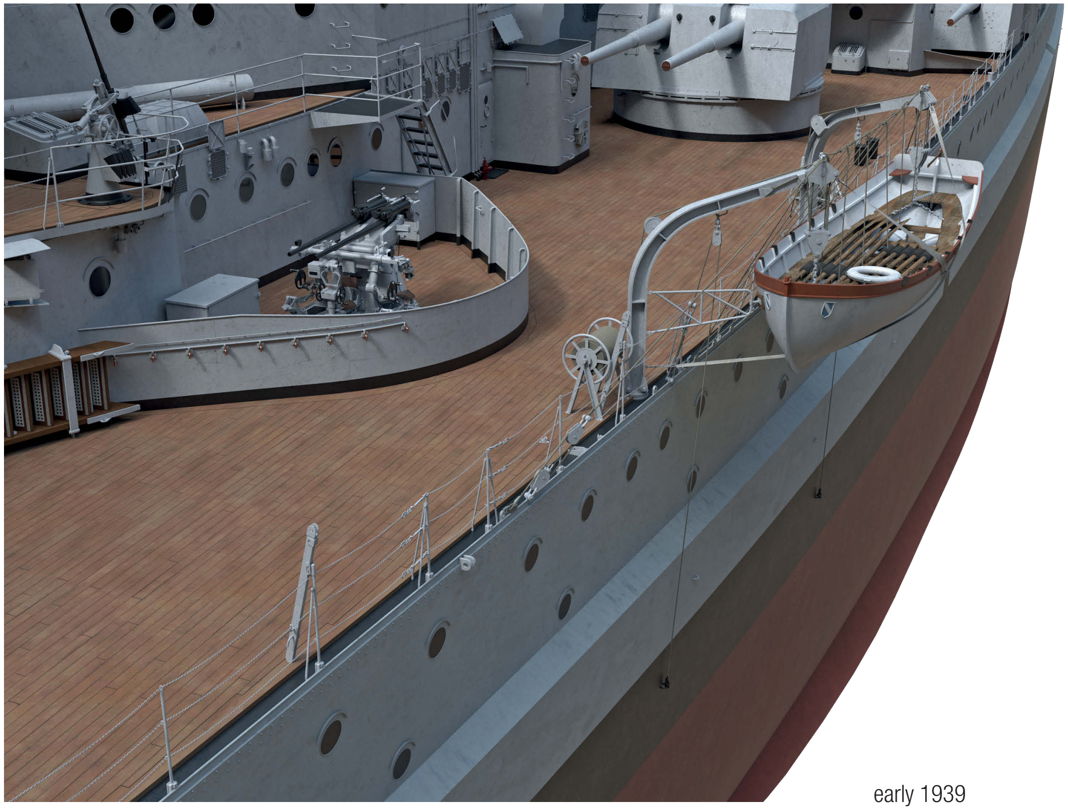

early 1939

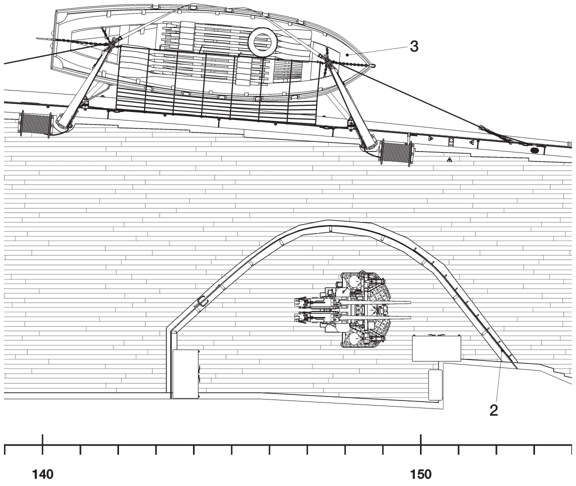

G3/3

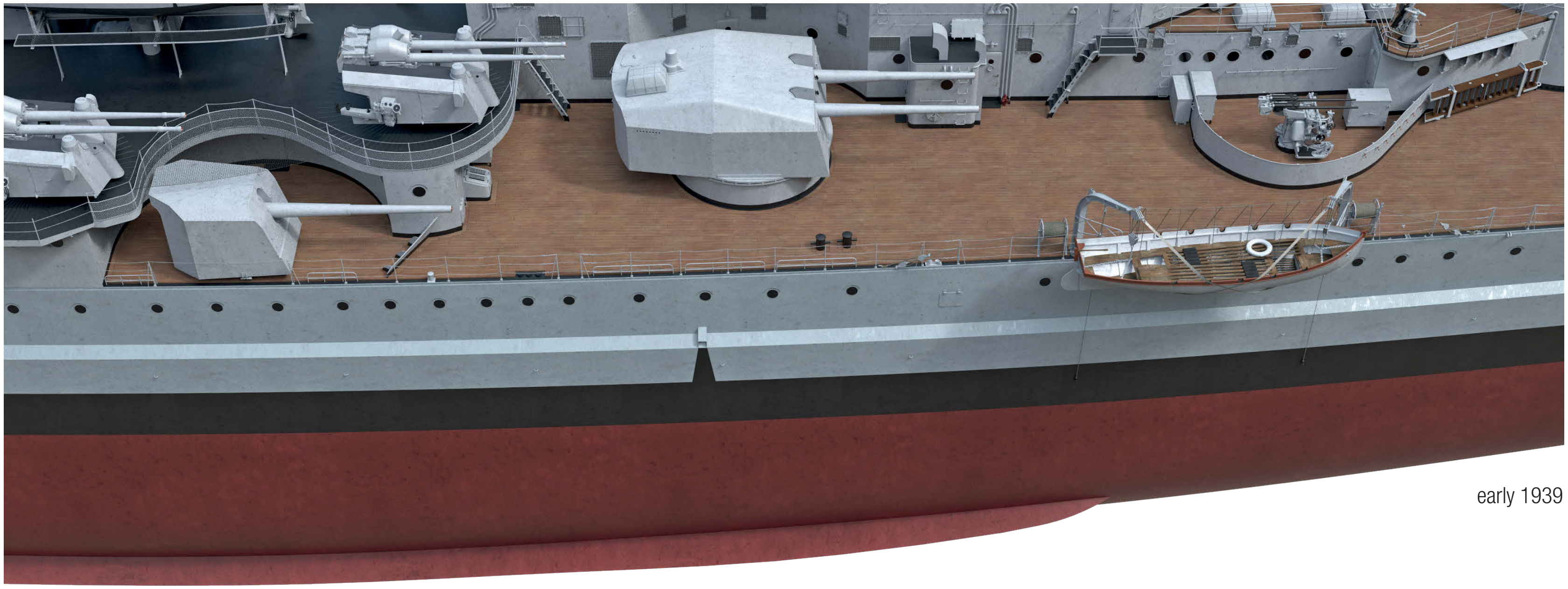

early 1939

HULL AND DECK FITTINGS, FRAMES 110–154, AFTER MID-1939 (1/200 SCALE)

G3/4 RIGHT PROFILE

G3/4–6 HULL AND DECK FITTINGS, FRAMES 110–154, AFTER MID-1939

1 Tall breakwater (from autumn 1940)
2 Expanded superstructure border (from summer 1941)
3 Fuel bunkering opening under armoured cover
4 Bollards
5 Fairlead
6 Barrier preventing empty 15cm shell cases from falling overboard
7 Additional barrier (fitted around late 1941)
8 Accommodation ladder platform attachment point
9 Accommodation ladder davit attachment point
10 Bilge keel
11 Twin 3.7cm mount shield integrated with a new breakwater (from autumn 1940)
12 Stowed accommodation ladder (not present from mid-1941)
13 Boat davit base
14 Twin 3.7cm mount
15 3.7cm ammunition locker
16 Twin 15cm turret barbette
17 Single 15cm mount base
18 Door

February 1942

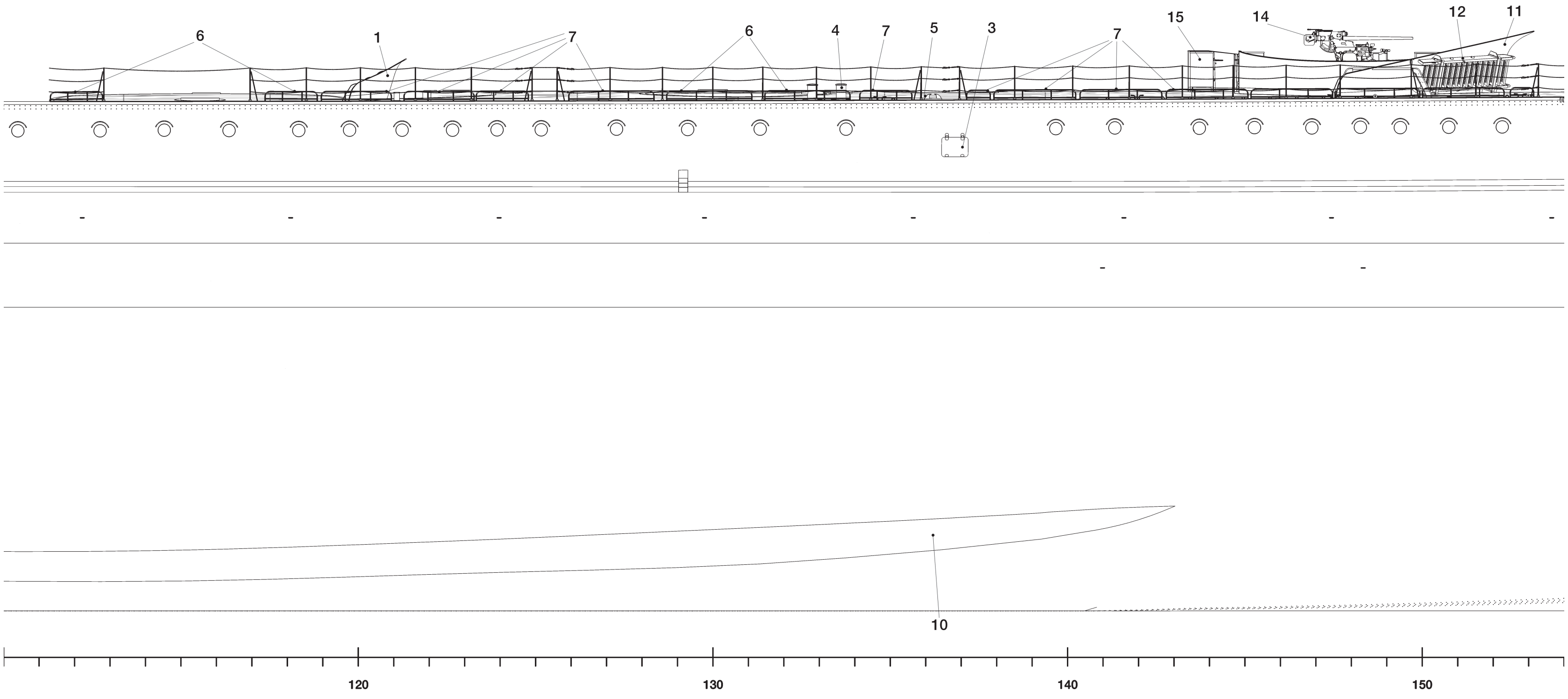

G3/4

G3/5 PLAN (STARBOARD SIDE FRAGMENT)
G3/6 PLAN (PORT SIDE FRAGMENT)

3.7CM AMMUNITION LOCKER (1/50 SCALE)
G3/7 PROFILE, FRONT VIEW AND PLAN

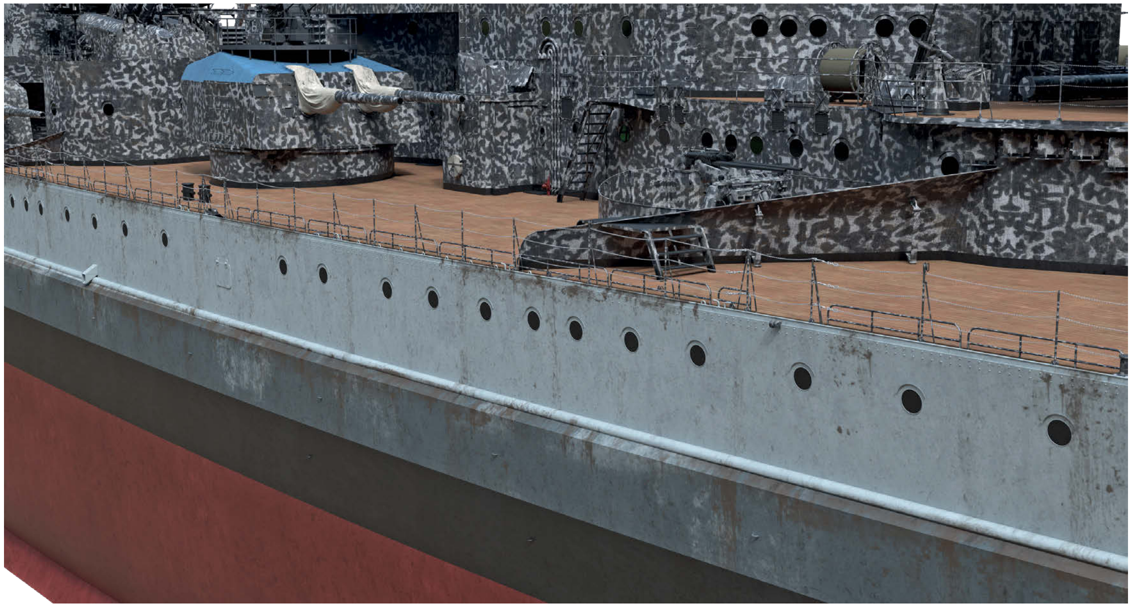

February 1942

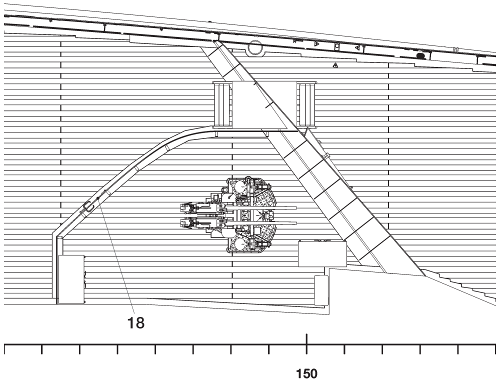

G3/6

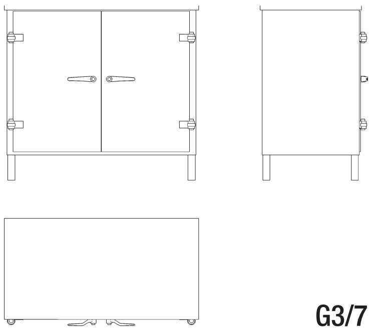

G3/7

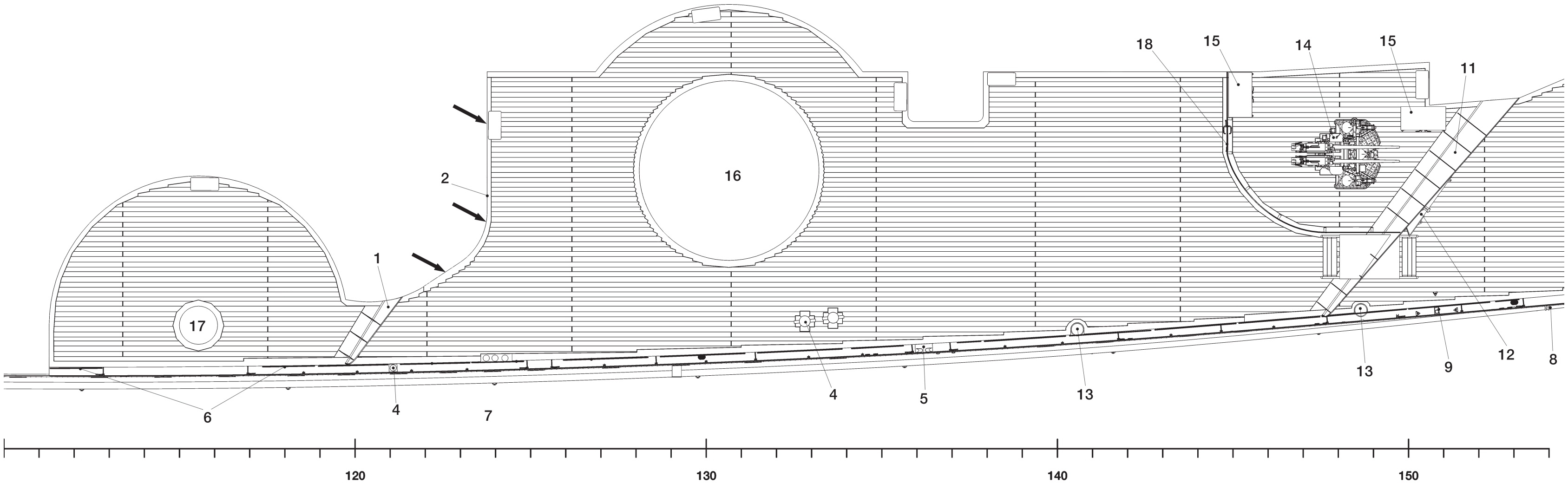

G3/5

HULL AND DECK FITTINGS, FRAMES 72–110, EARLY 1939 (1/200 SCALE)

G4/1 PLAN (FRAGMENT)

1 Bollards (removed in summer 1941)
2 Motor yawl (removed from both sides in mid-1939)

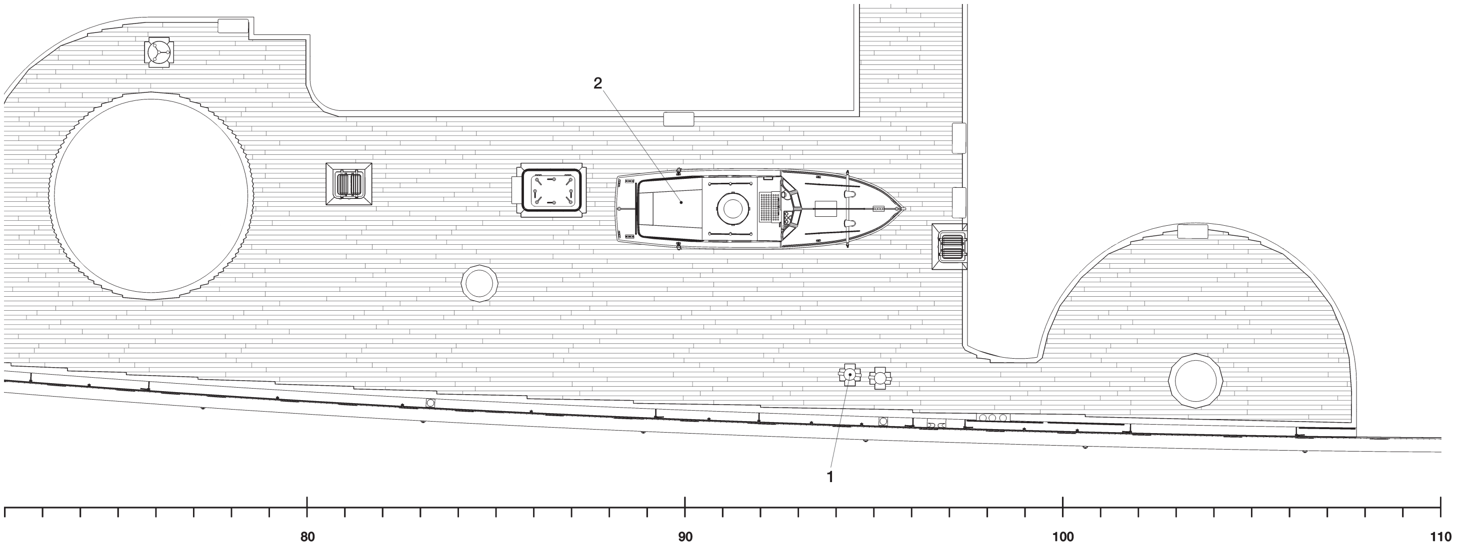

G4/1

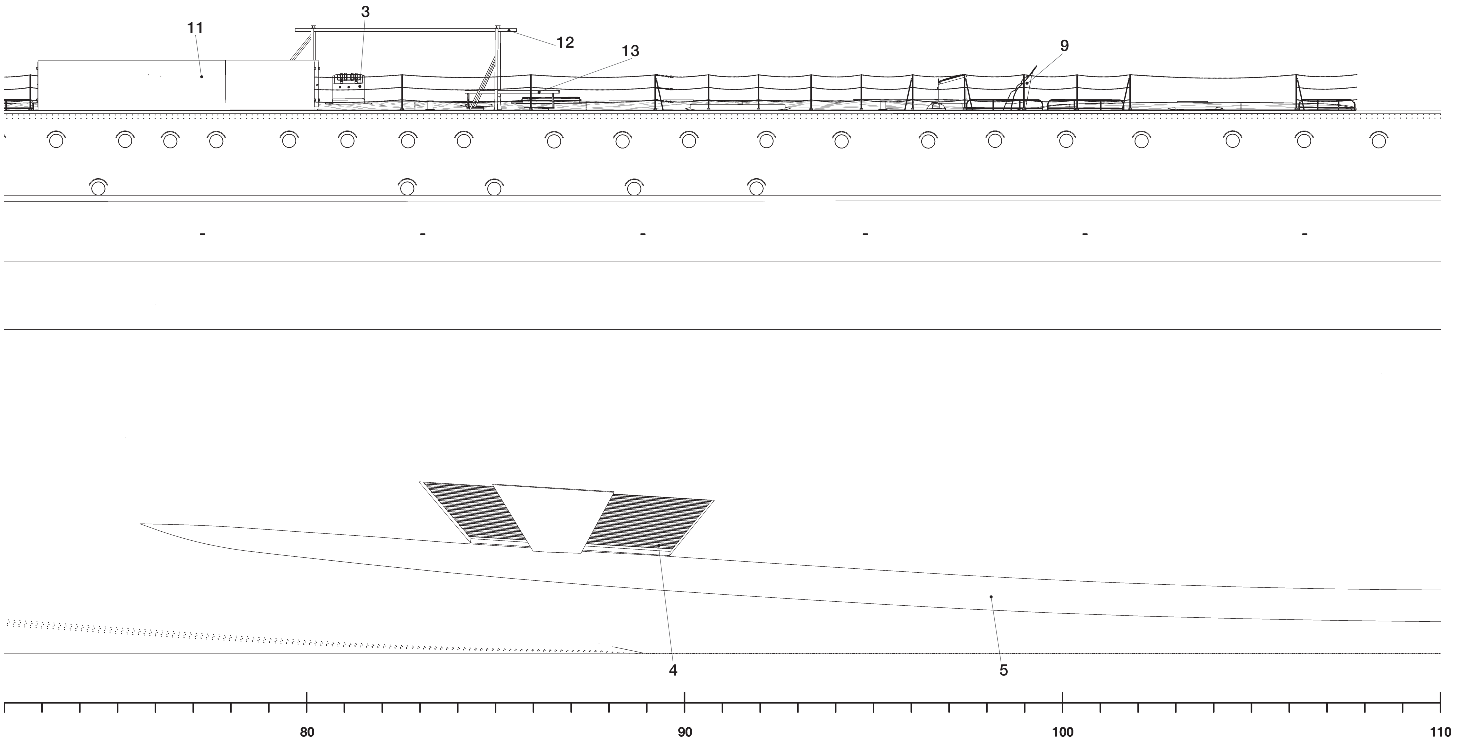

G4/2

HULL AND DECK FITTINGS, FRAMES 72–110, FROM 1941 (1/200 SCALE)

G4/2 RIGHT PROFILE

G4/3 PLAN (STARBOARD SIDE FRAGMENT)

G4/2–3 HULL AND DECK FITTINGS, FRAMES 72–110

1 15cm ammunition magazine loading point
2 Main aircraft and boat crane base
3 Skylight
4 Starboard turbine cooling water inlet
5 Bilge keel
6 Twin 15cm turret barbette
7 Single 15cm mount base
8 Deck hatch
9 Breakwater (fitted in summer 1941)
10 Triple torpedo tube mount base (from summer 1941)
11 Container for 4 spare torpedoes (from summer 1941)
12 Torpedo overhead crane (from summer 1941)
13 Rotating torpedo cradle (from summer 1941)
14 Tripod mainmast base (from mid-1939)

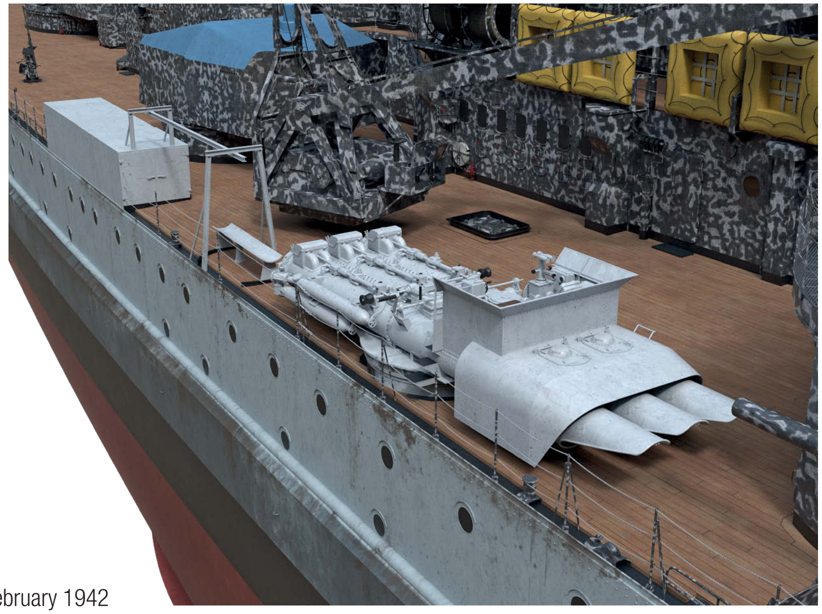

February 1942

TORPEDO CONTAINER, OVERHEAD CRANE AND CRADLE (1/100 SCALE)

G4/4 FRONT VIEW

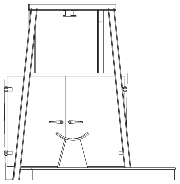

G4/4

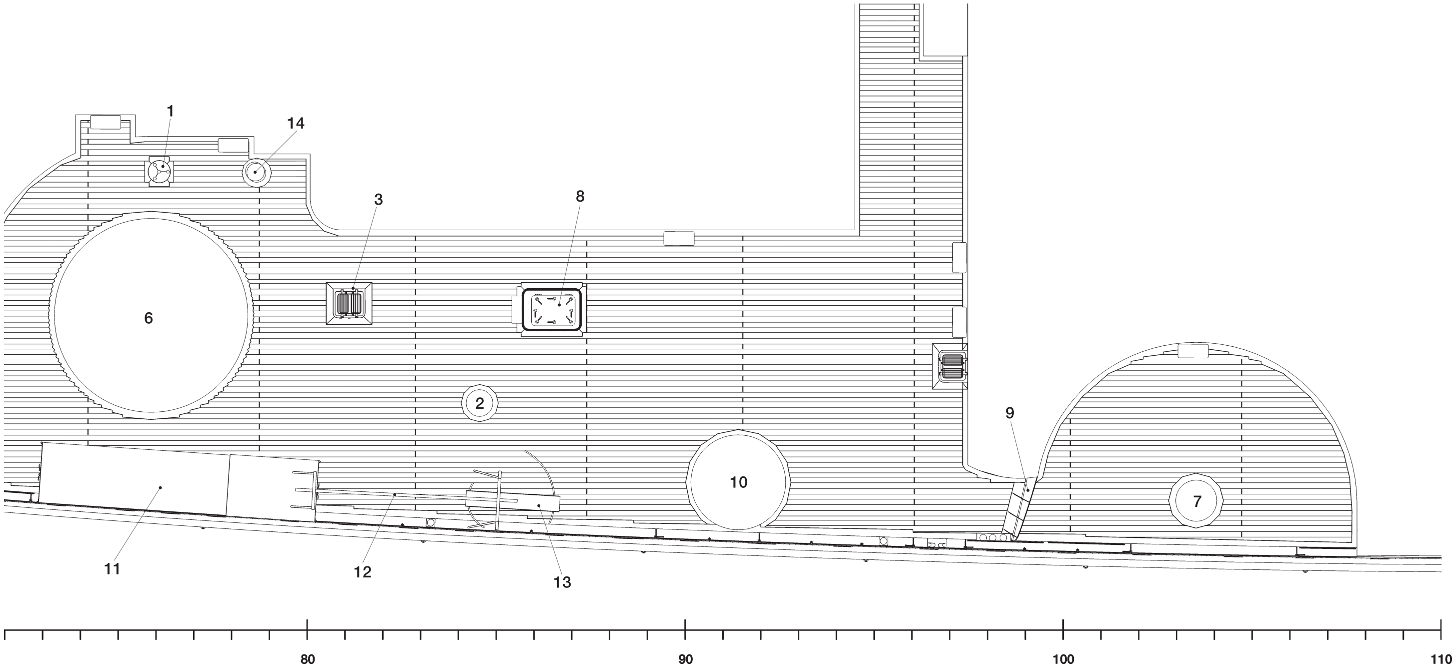

G4/3

HULL AND DECK FITTINGS, FRAMES 34–72 (1/200 SCALE)

G5/1 RIGHT PROFILE

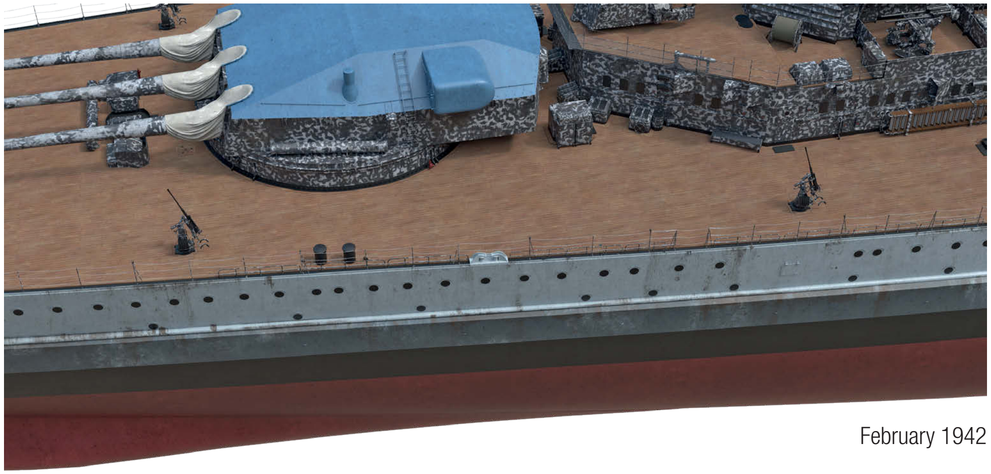

February 1942

G5/1–3 HULL AND DECK FITTINGS, FRAMES 34–72

1 Vent (modified around mid-1941)
2 28cm ammunition magazine loading point
3 Single 2cm C/38 mount (replaced earlier C/30 mount in January 1941)
4 Single 2cm C/38 mount (added in early 1942)
5 Deck hatch hut
6 Barrier preventing empty 28cm shell cases from falling overboard
7 Additional barrier (fitted around late 1941)
8 Skylight
9 Accommodation ladder platform attachment point
10 Accommodation ladder davit attachment point
11 Middle turbine cooling water inlet (on port side only)
12 Barbette of main artillery turret Cäsar

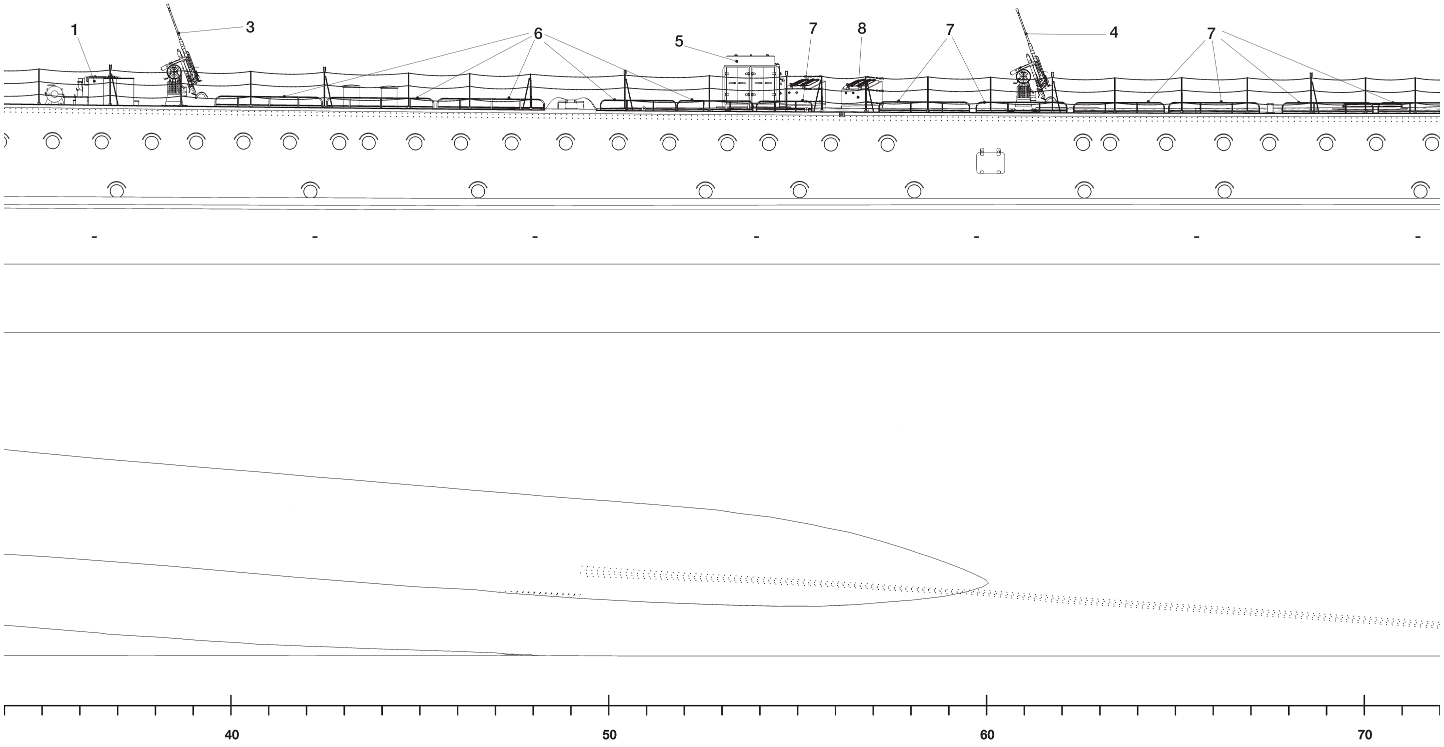

G5/1

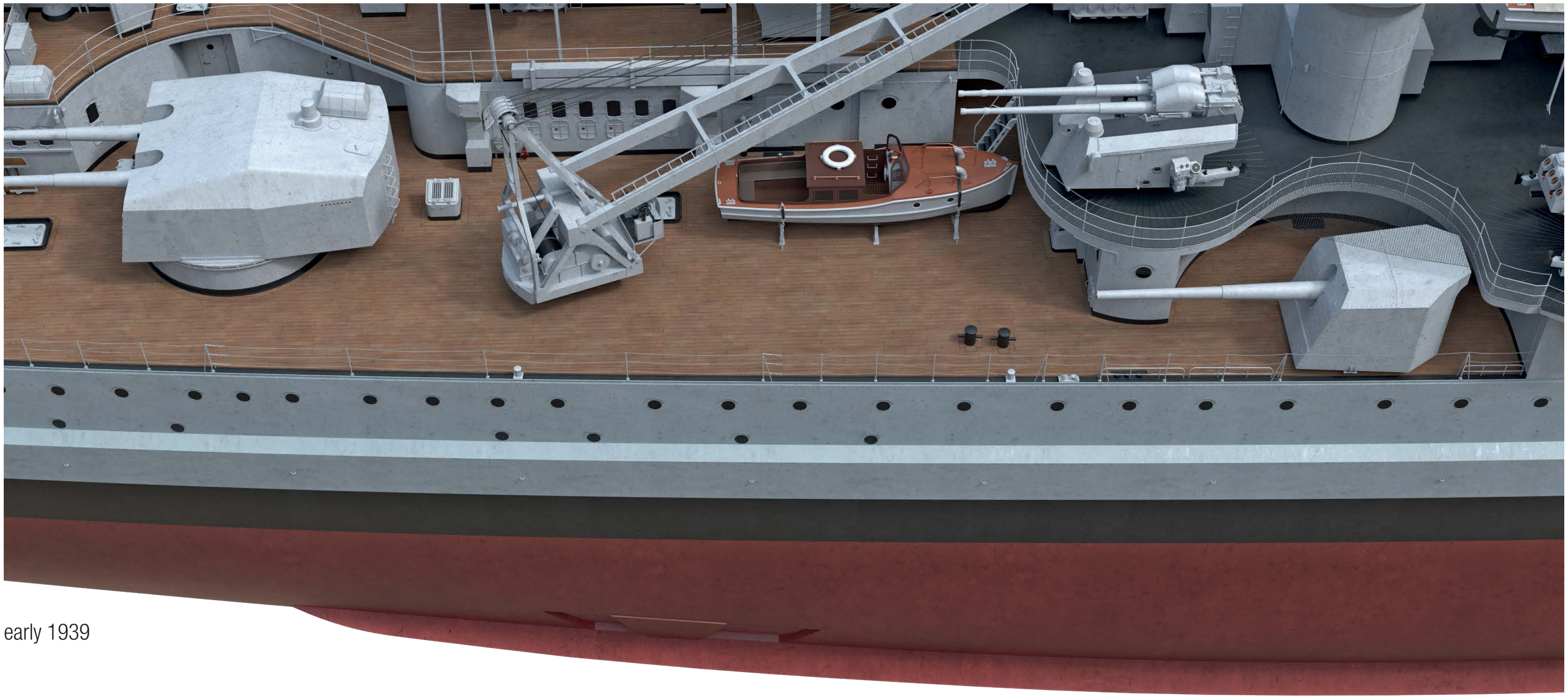

early 1939

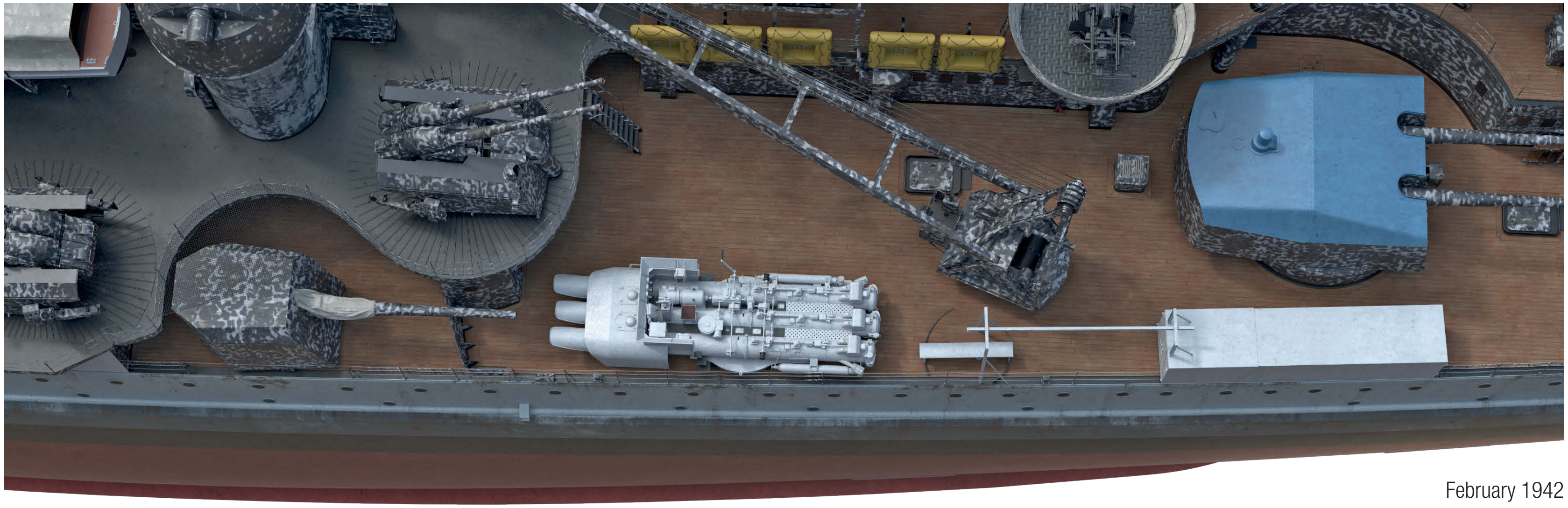

February 1942

HULL AND DECK FITTINGS, FRAMES 34–72 (1/200 SCALE)

G5/2 PLAN

G5/3 LEFT PROFILE (FRAGMENT)

DECK HATCH HUT AT FRAME 54 (1/100 SCALE)

G5/4 RIGHT PROFILE

G5/5 FRONT VIEW

G5/6 PLAN

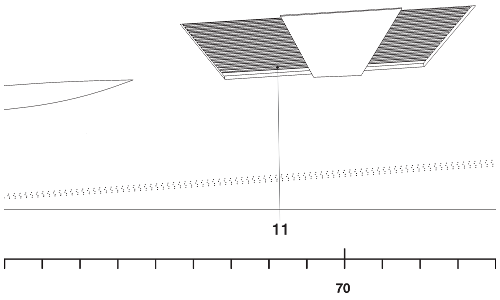

G5/3

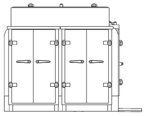

G5/4

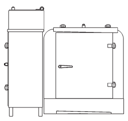

G5/5

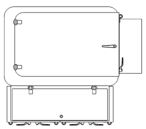

G5/6

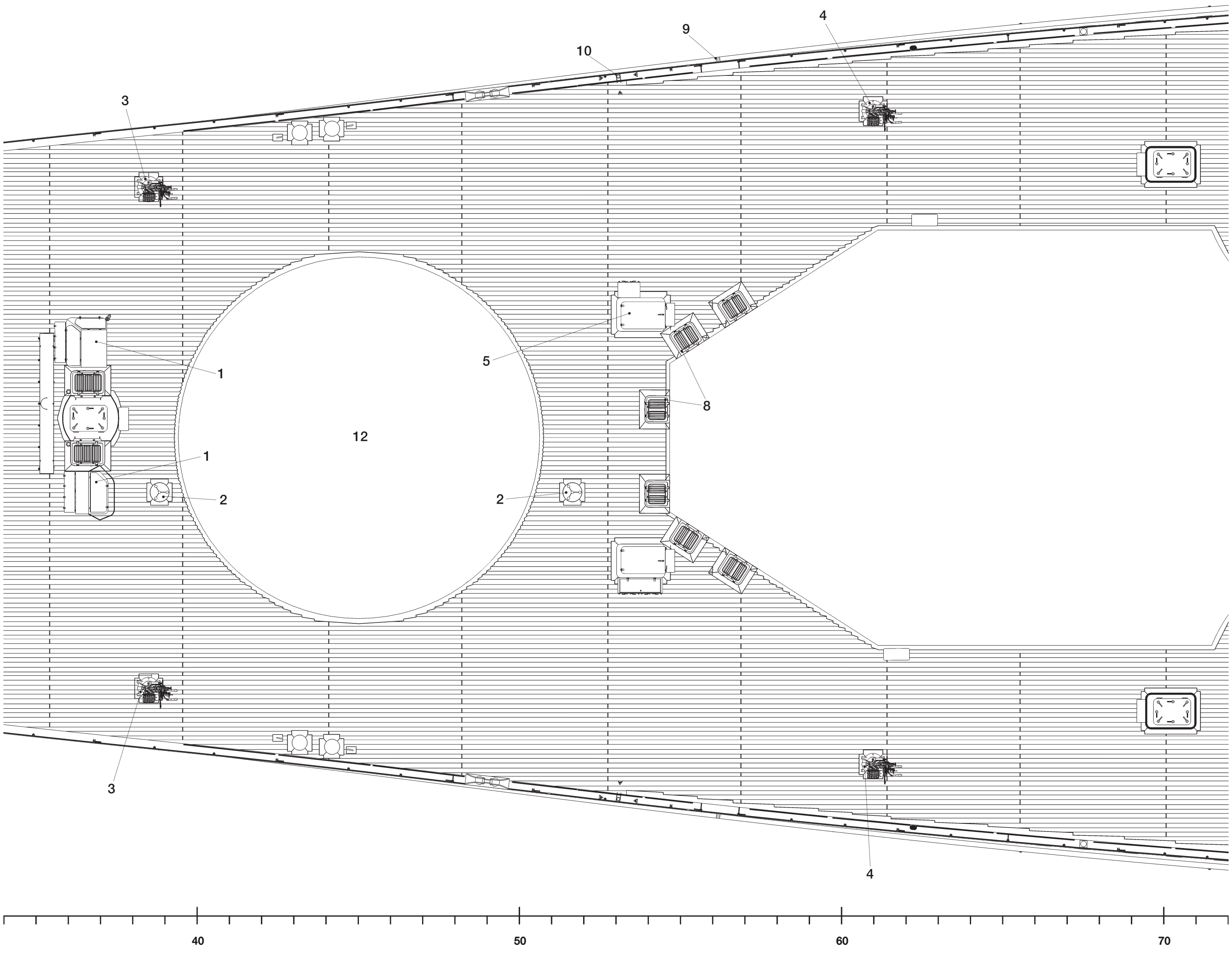

G5/2

VENTS AT FRAME 37, ORIGINAL FORM (1/100 SCALE)

G5/7 RIGHT PROFILE
G5/8 FRONT VIEW
G5/9 PLAN

VENTS AT FRAME 37, AFTER MODIFICATION AROUND MID-1941 (1/100 SCALE)

G5/10 BACK VIEW
G5/11 PLAN

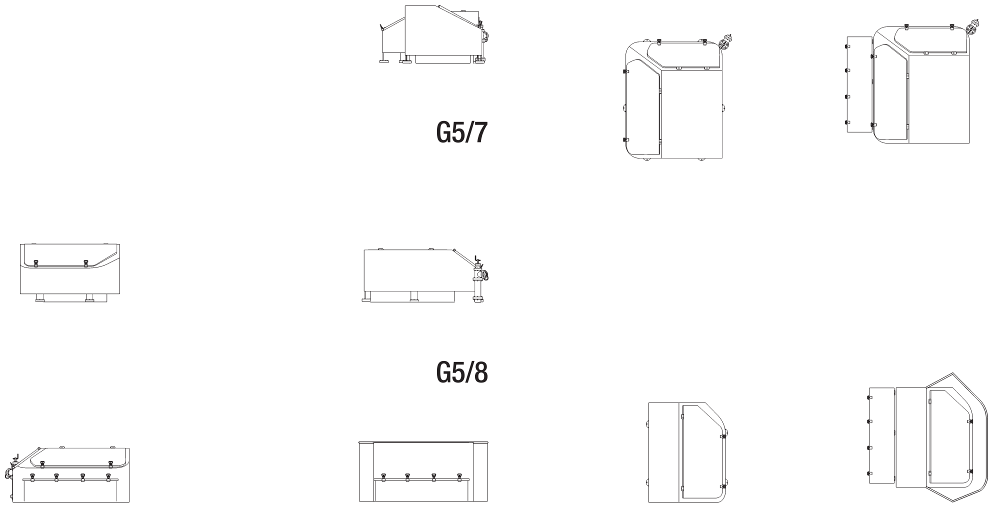

G5/7

G5/8

G5/10 G5/9 G5/11

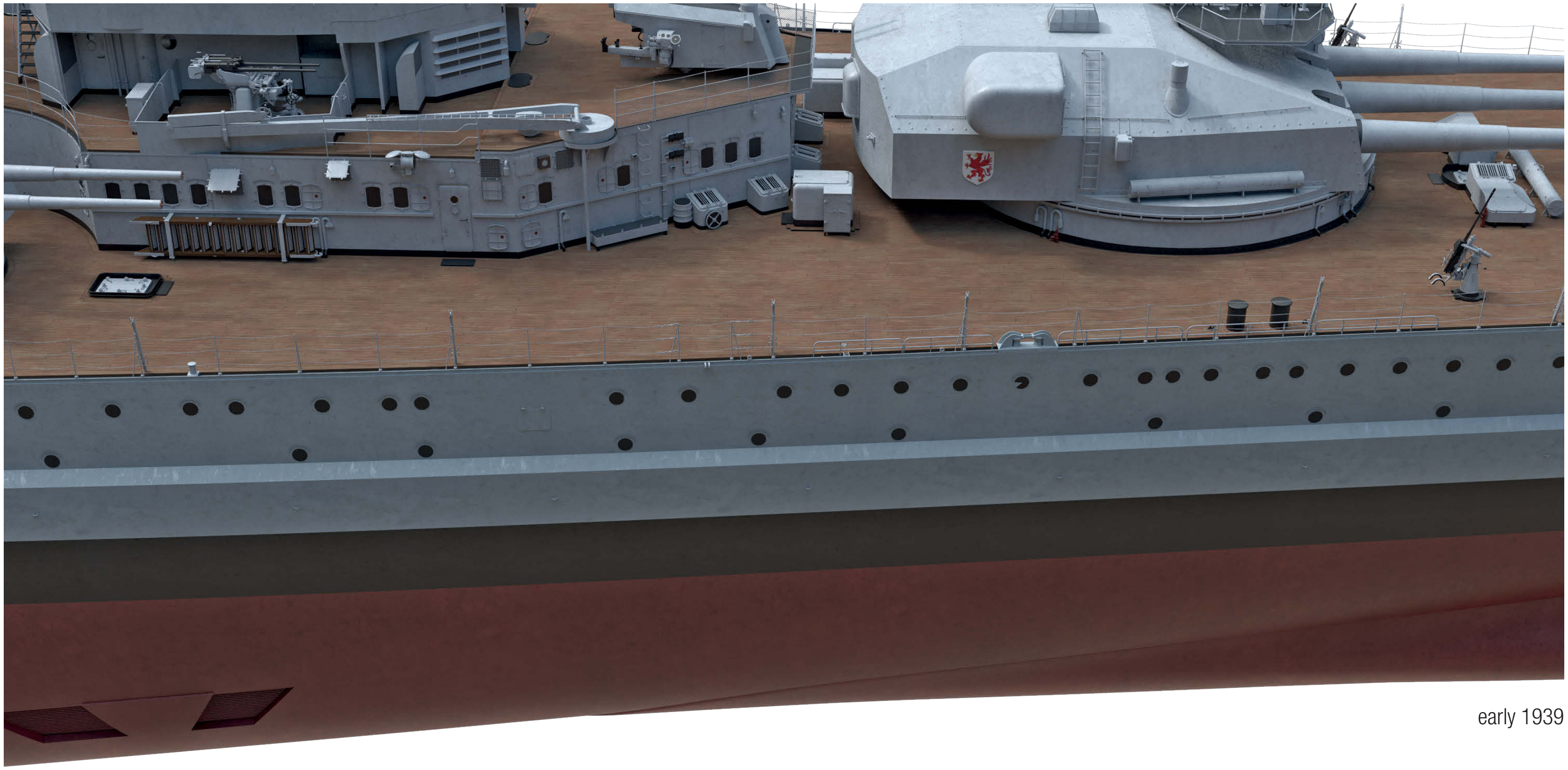

early 1939

HULL AND DECK FITTINGS, FRAMES 0–34, EARLY 1939 (1/200 SCALE)

G6/1 LEFT PROFILE (FRAGMENT)

G6/2 BACK VIEW (FRAGMENT)

G6/1–2 HULL AND DECK FITTINGS, FRAMES 0–34, EARLY 1939

1. Stern anchor (port side only)
2. Aft boat boom (original position, port side only)
3. White painted welded draught marks
4. White painted draught marks (painted over in mid-1939)
5. Propeller guard (rigged)
6. Ship's nameplate (removed in September 1939)
7. *Reichsadler* crest (removed in March 1940)
8. Stern roller fairlead (original form)
9. Ensign staff (not present after mid-1939)

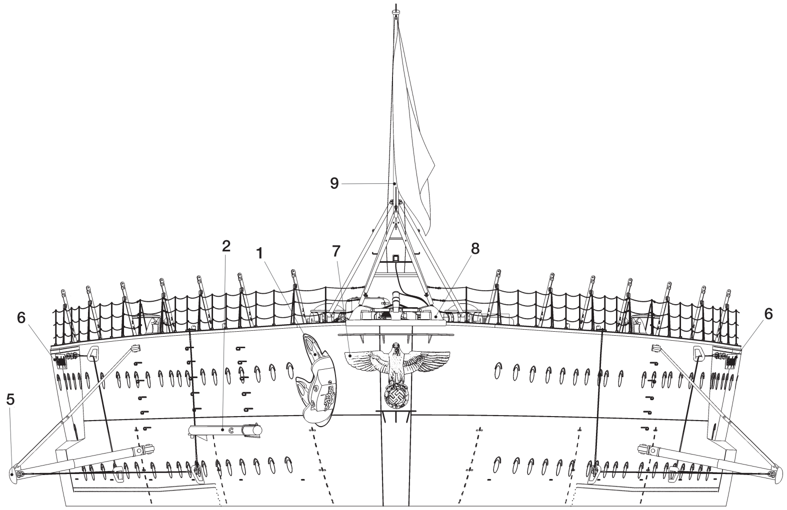

G6/2

SHIP'S NAMEPLATE (1/50 SCALE)

G6/3 PROFILE

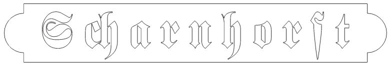

G6/3

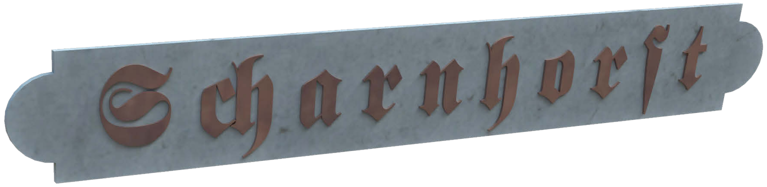

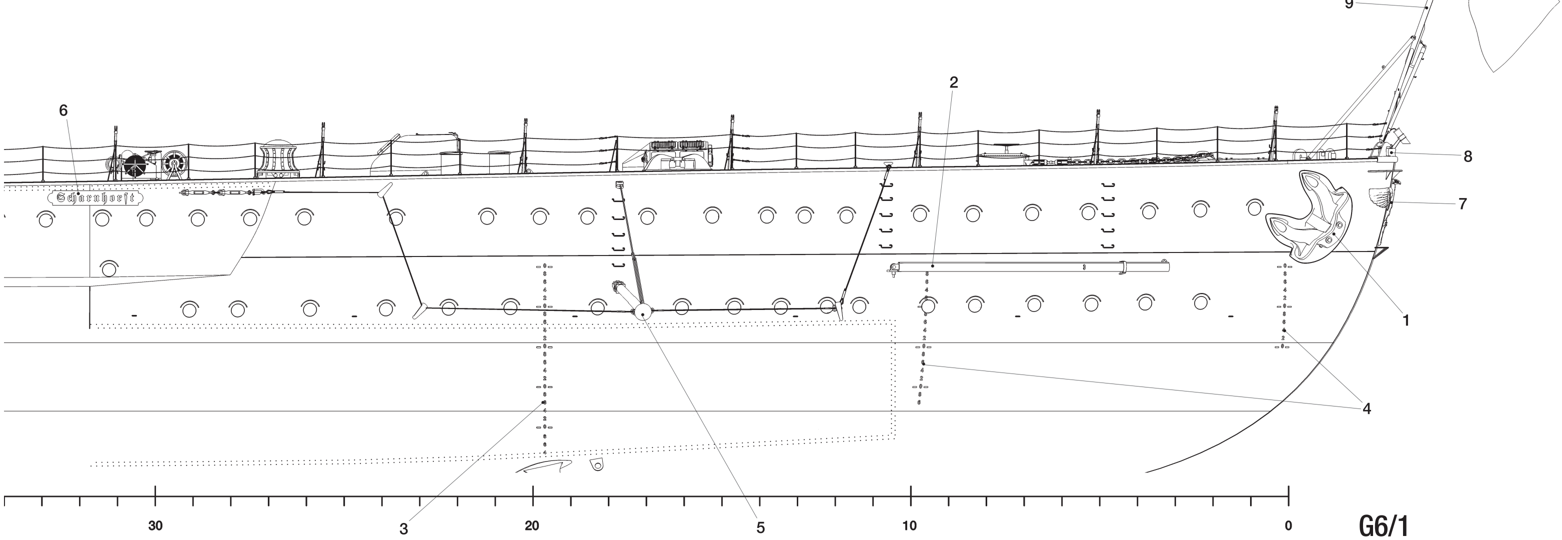

G6/1

REICHSADLER CREST (1/50 SCALE)

G6/4 FRONT VIEW

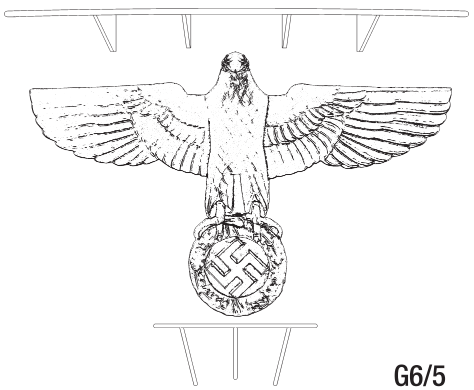

early 1939

G6/5

early 1939

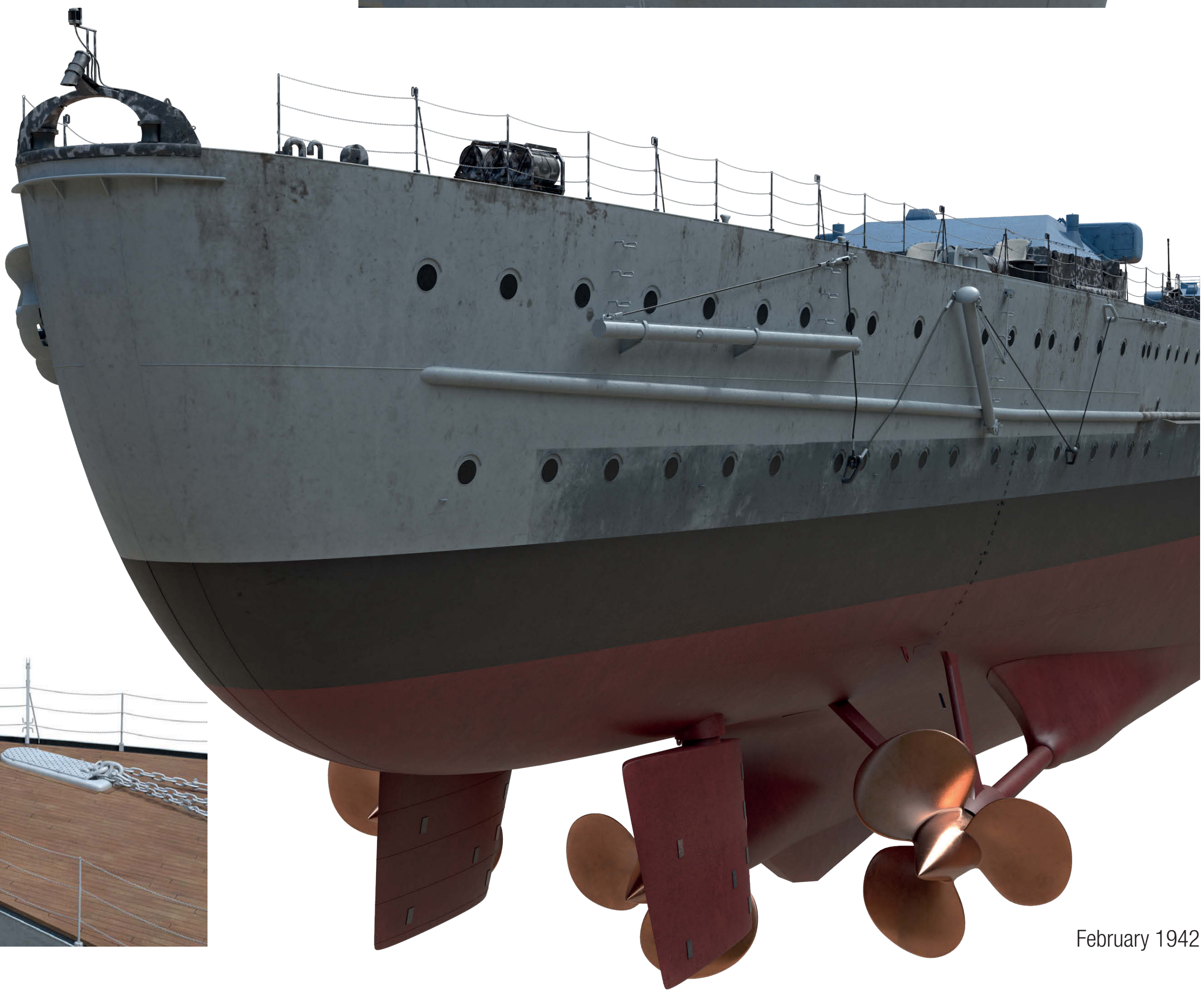

February 1942

ROLLER FAIRLEAD WITH WAKE LIGHT, ORIGINAL FORM (1/50 SCALE)

G6/5 RIGHT PROFILE
G6/6 BACK VIEW
G6/7 PLAN

HULL AND DECK FITTINGS, FRAMES 0–34, AFTER MID-1939 (1/200 SCALE)

G6/8 RIGHT PROFILE
G6/9 PLAN
G6/10 BACK VIEW

G6/8–10 HULL AND DECK FITTINGS, FRAMES 0–34, AFTER MID-1939

1 Skylight
2 White painted welded draught marks
3 Vent (modified around mid-1941)
4 Anchor cable
5 Cable stopper
6 Anchor wire rope holder
7 Deck hatch hut
8 Bollards
9 Stern roller fairlead, new form (replaced the original in mid-1939)
10 *Fliegersichtzeichen* (air recognition mark) – black swastika on white circle and red banner (painted after outbreak of the war, kept visible when within Luftwaffe's aircraft range; covered with tarpaulin or painted over during operations in distant waters)
11 Capstan
12 Depth charge rack (present from January 1941 till mid-1942)
13 Propeller guard (folded)
14 Aft boat boom (relocated in mid-1939)
15 Smoke generation compartment hatch
16 Smoke generation container hatch
17 Stern armor riveting
18 Boot topping borders
19 MES (*Magnetischer Eigenschutz*) – degaussing cable (added in mid-1940)
20 Stern anchor
21 Rudder
22 Starboard propeller shaft
23 Starboard propeller strut
24 Starboard propeller (right-handed – clockwise rotating)
25 Middle propeller (left-handed – anticlockwise rotating)
26 Port propeller (left-handed – anticlockwise rotating)
27 Zinc strips

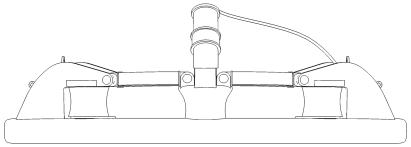
G6/6

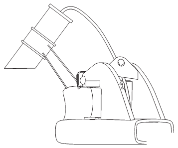
G6/5

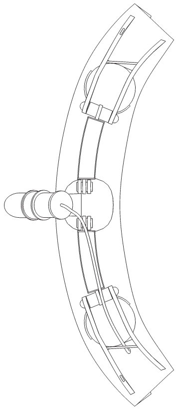
G6/7

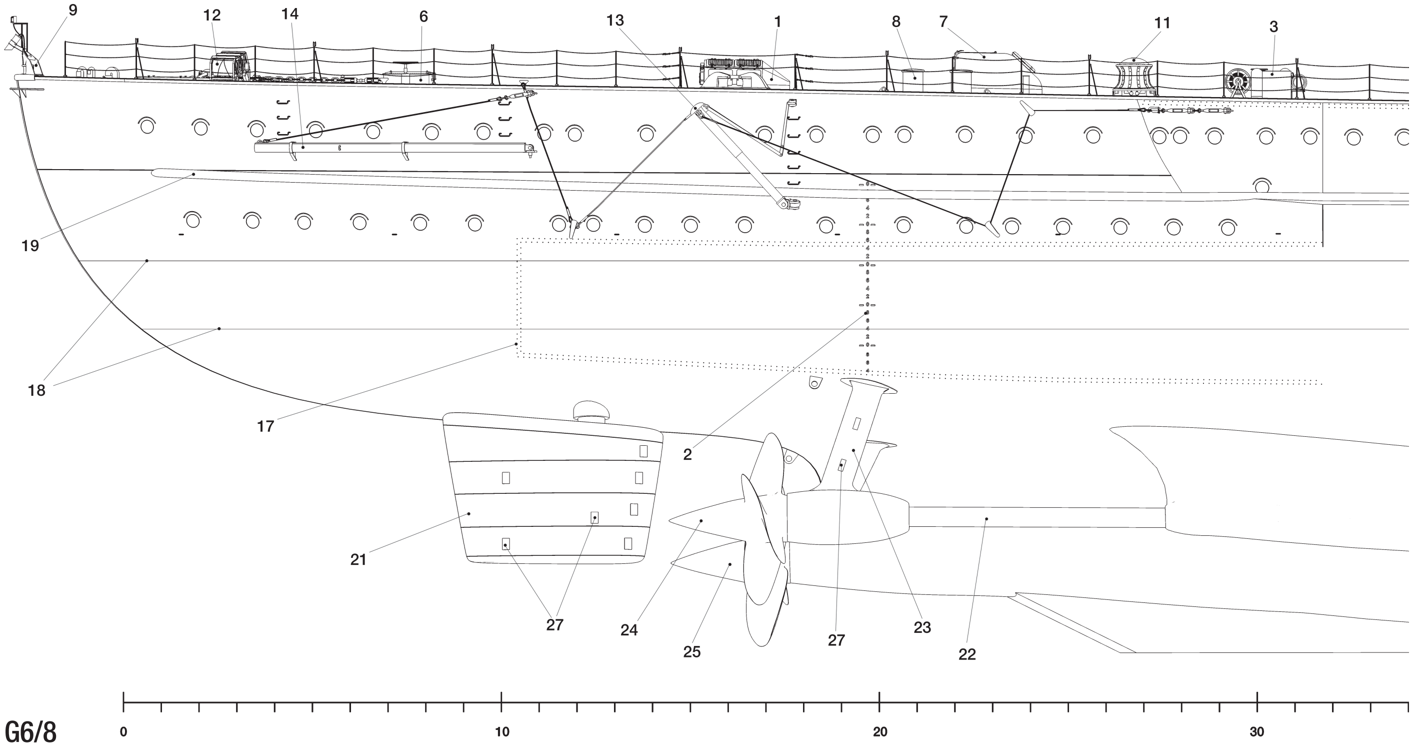

G6/8

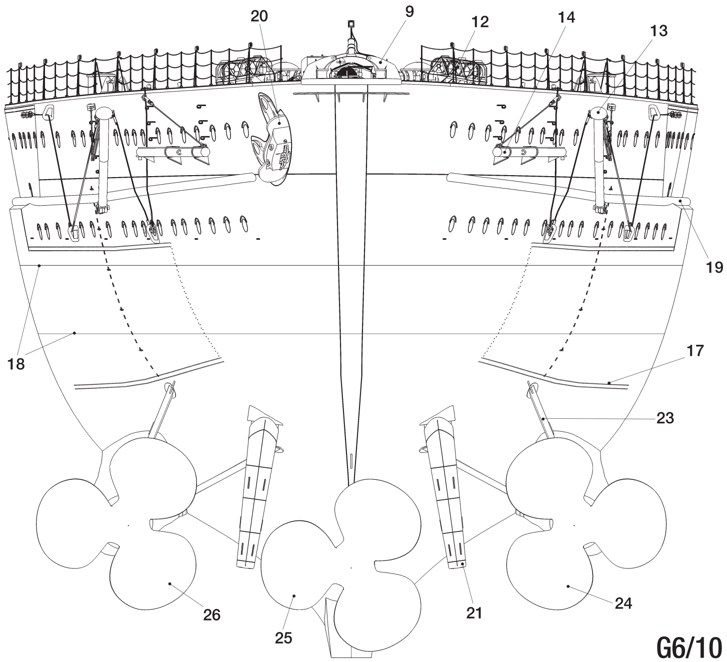

G6/10

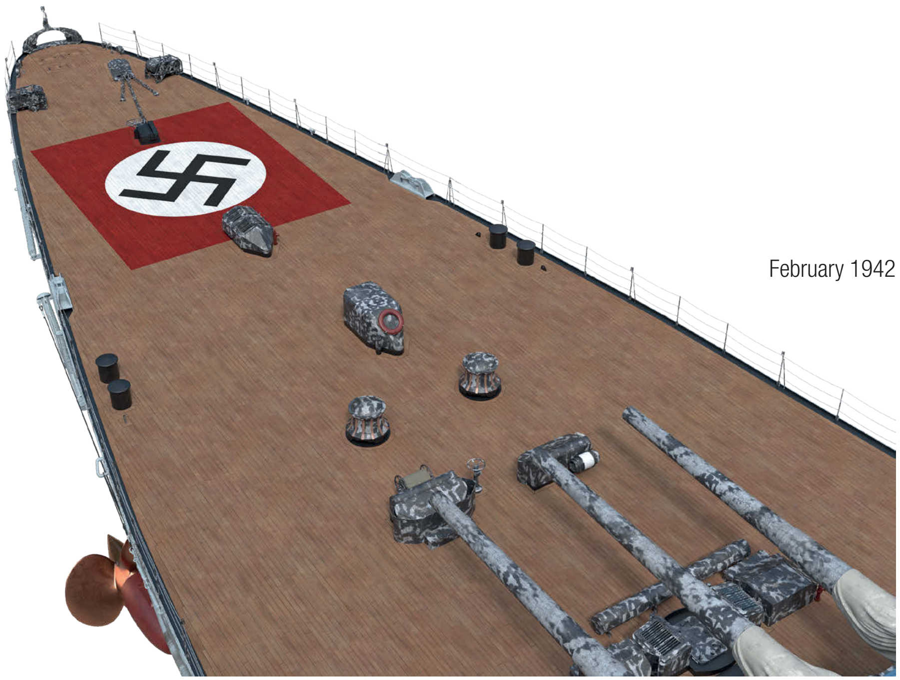

February 1942

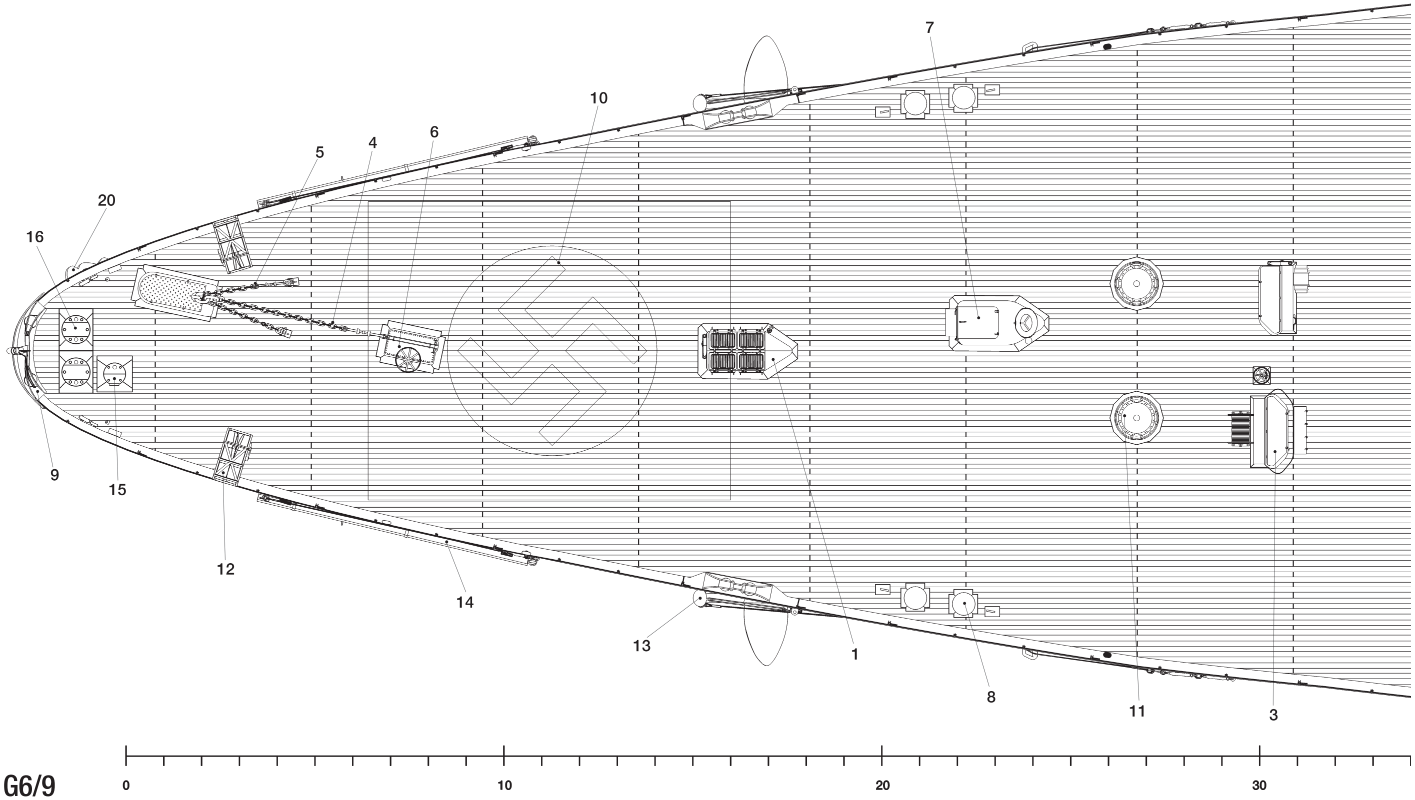

G6/9

VENTS AT FRAME 30, ORIGINAL FORM (1/100 SCALE)

G6/11 RIGHT PROFILE
G6/12 FRONT VIEW
G6/13 PLAN

VENTS AT FRAME 30, AFTER MODIFICATION AROUND MID-1941 (1/100 SCALE)

G6/14 FRONT VIEW
G6/15 PLAN

STERN CAPSTAN (1/50 SCALE)

G6/16 PROFILE
G6/17 PLAN

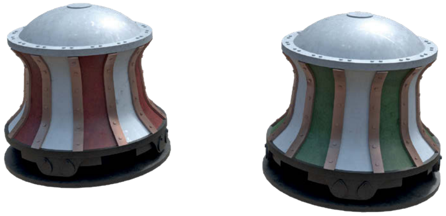

DECK HATCH HUT AT FRAME 23 (1/100 SCALE)

G6/18 RIGHT PROFILE
G6/19 BACK VIEW
G6/20 PLAN

ANCHOR WIRE ROPE HOLDER (1/50 SCALE)

G6/21 RIGHT PROFILE
G6/22 FRONT VIEW
G6/23 PLAN

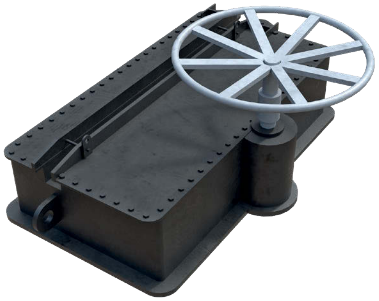

STERN ROLLER FAIRLEAD WITH WAKE LIGHT AND STERN LIGHT, AFTER MID-1939 (1/50 SCALE)

G6/24 RIGHT PROFILE
G6/25 BACK VIEW
G6/26 PLAN

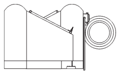
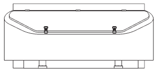
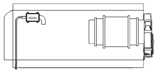
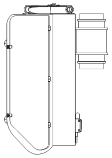

G6/11

G6/12

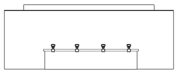
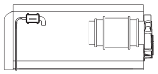
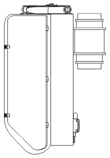

G6/14

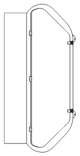

G6/13

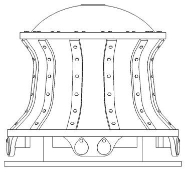

G6/16

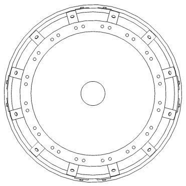

G6/17

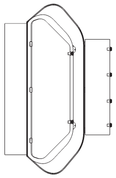

G6/15

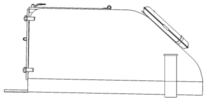

G6/18

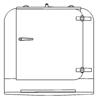

G6/19

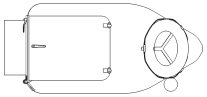

G6/20

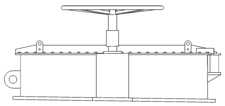

G6/21

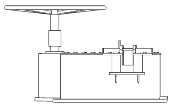

G6/22

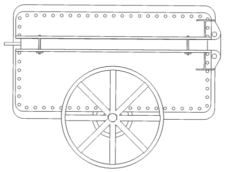

G6/23

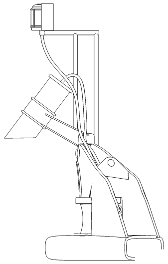

G6/24

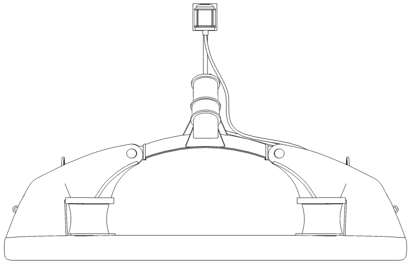

G6/25

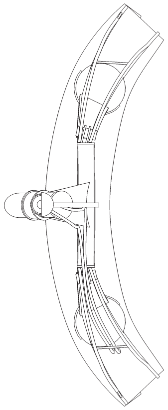

G6/26

early 1939

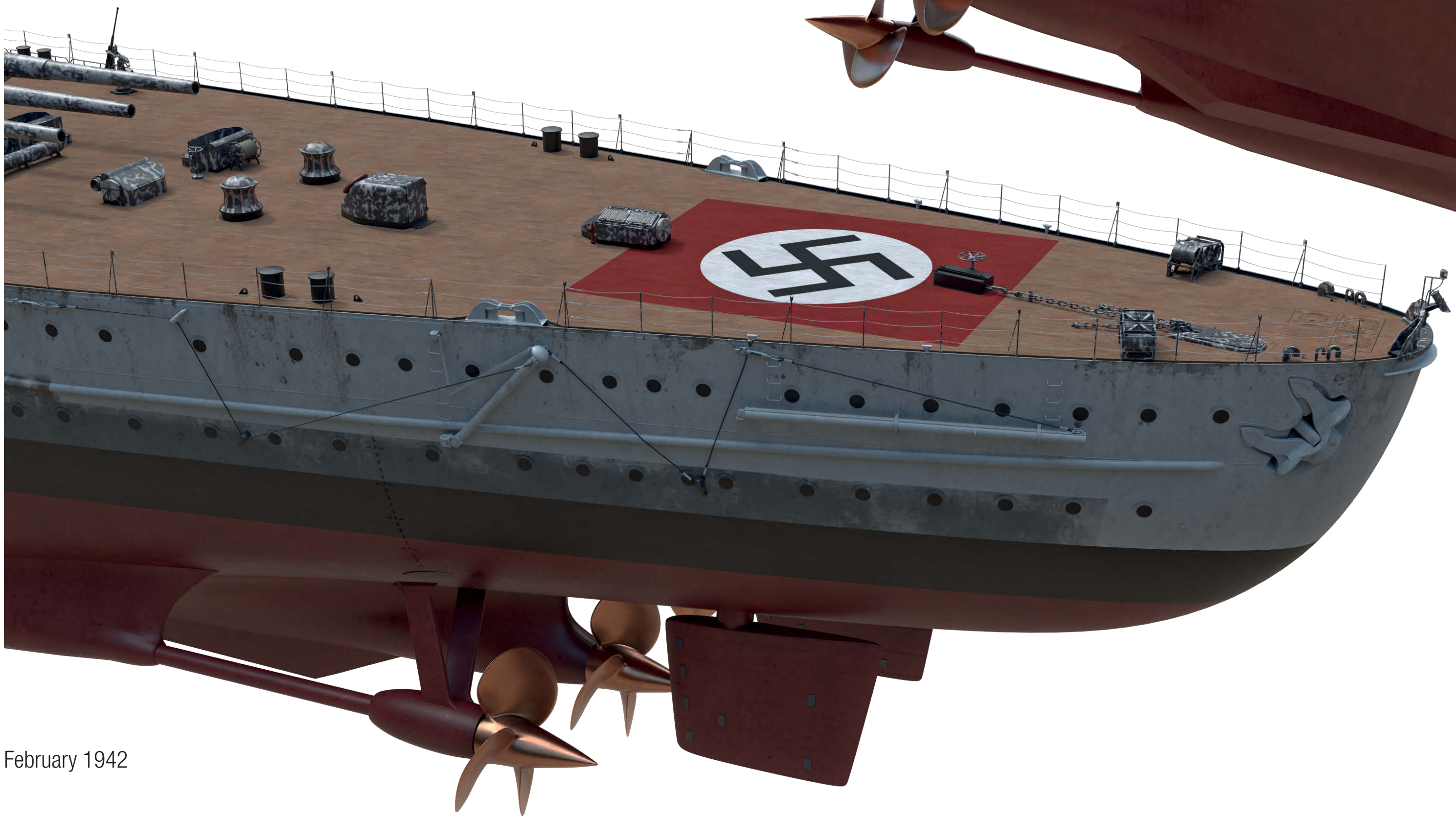

February 1942

TYPICAL WALL VENT (1/25 SCALE)

G7/1 PROFILE AND FRONT VIEW

PARAVANE (1/25 SCALE)

G7/2 RIGHT PROFILE

G7/3 FRONT VIEW

G7/4 BACK VIEW

G7/5 PLAN

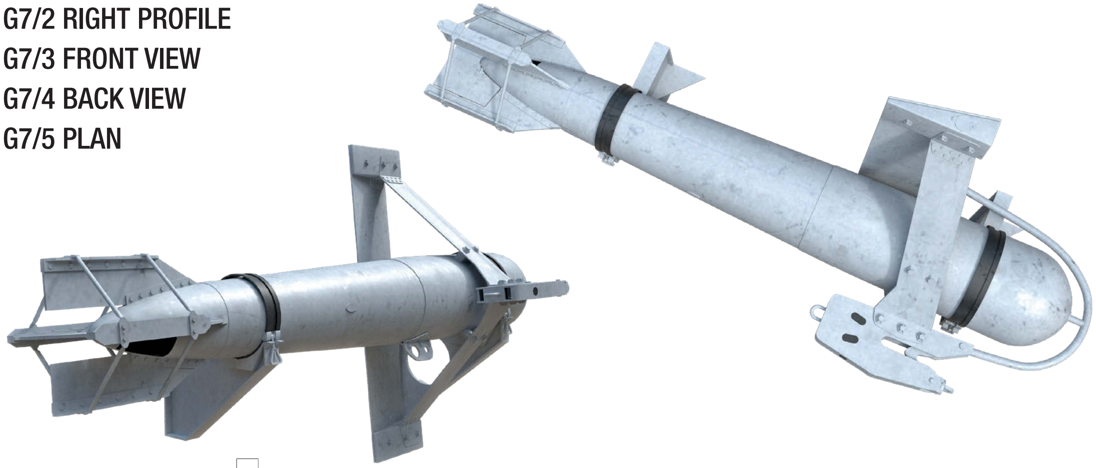

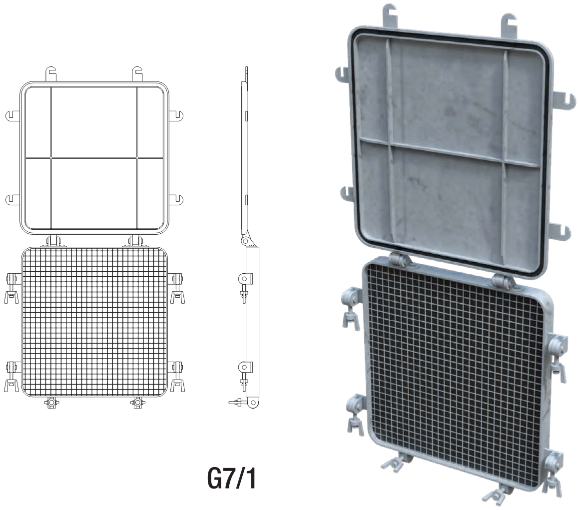

G7/1

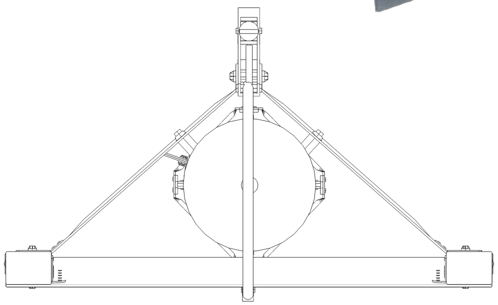

G7/3

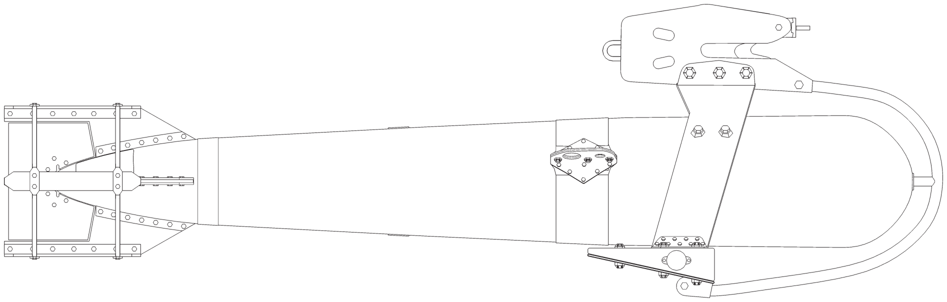

G7/2

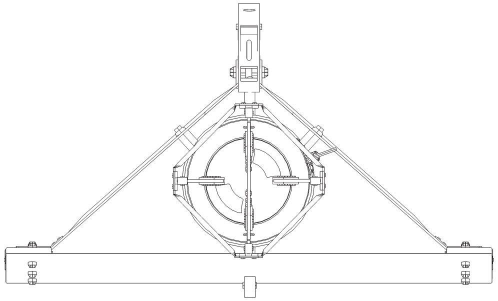

G7/4

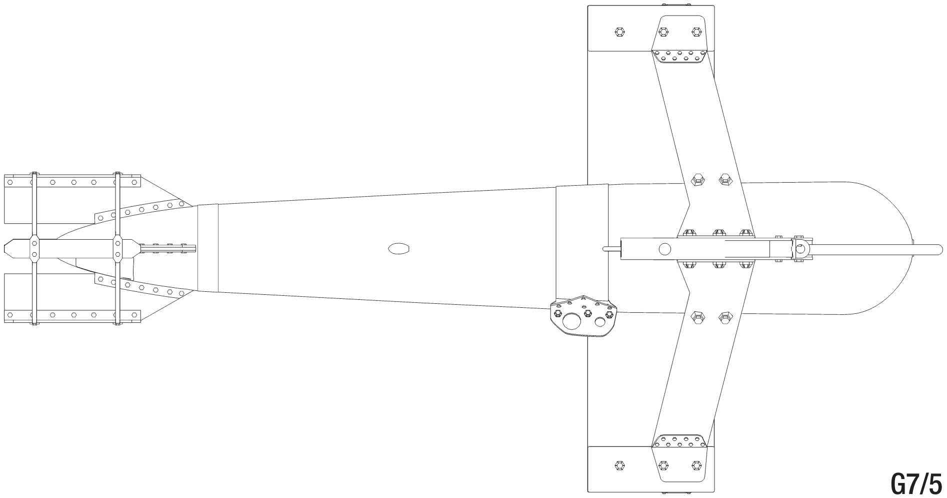

G7/5

TYPICAL WATERTIGHT DOORS (1/50 SCALE)

G7/6 DOOR TYPE 1
G7/7 DOOR TYPE 2

TYPICAL SIDE SCUTTLES (1/25 SCALE)

G7/8 PROFILES AND FRONT VIEWS

LIFE RING (1/25 SCALE)

G7/9 PROFILE AND FRONT VIEW

TYPICAL LADDERS (1/50 SCALE)

G7/10 LADDER TYPE 1
G7/11 LADDER TYPE 2
G7/12 LADDER TYPE 3

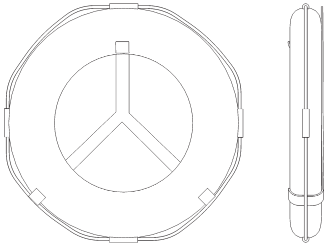

G7/9

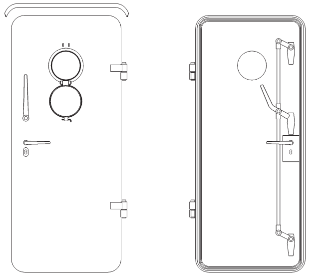

G7/6

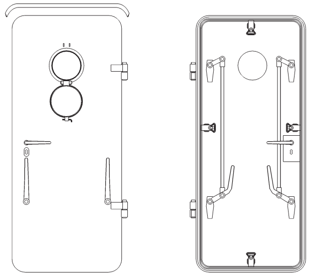

G7/7

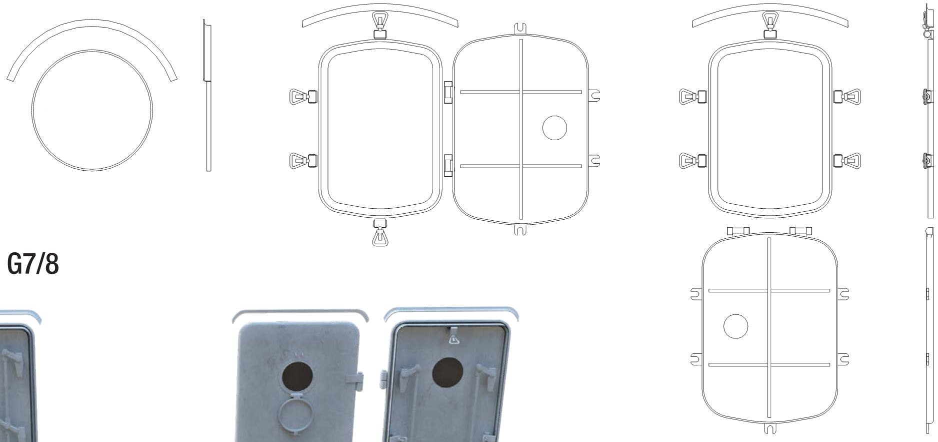

G7/8

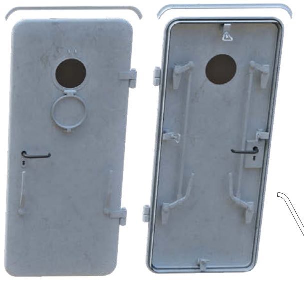

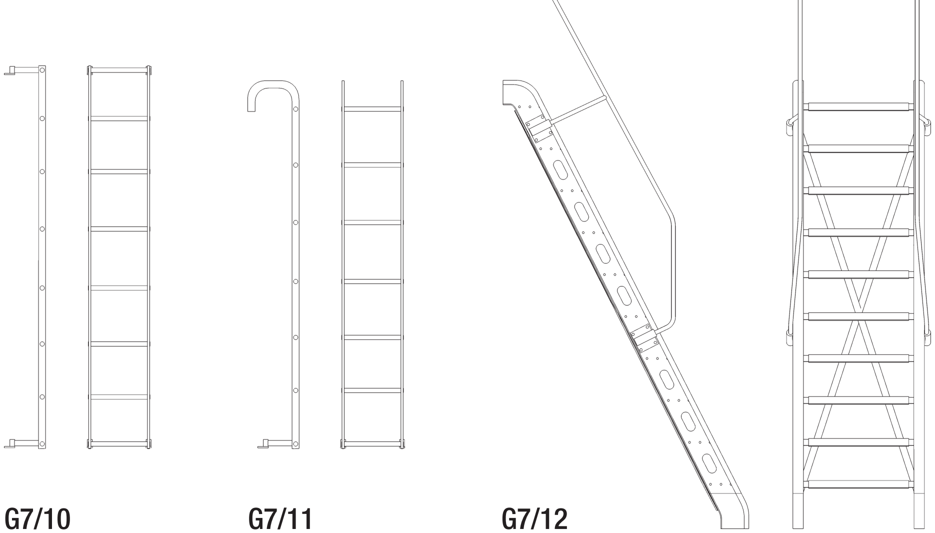

G7/10

G7/11

G7/12

TYPICAL LANTERN (1/25 SCALE)
G7/13 PROFILE

COMPASS REPEATER (1/25 SCALE)
G7/14 PROFILE, FRONT VIEW AND PLAN

WIRE ANTENNA INSULATOR (1/12.5 SCALE)
G7/15 PROFILE

SIGNAL LAMP (1/25 SCALE)
G7/16 RIGHT PROFILE
G7/17 FRONT VIEW
G7/18 BACK VIEW
G7/19 PLAN

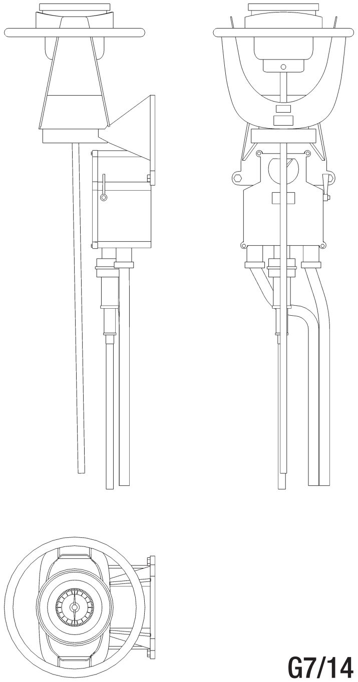

G7/14

G7/13

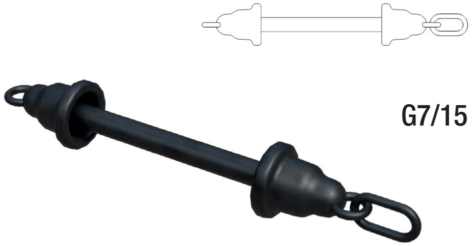

G7/15

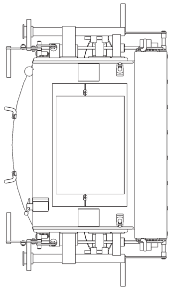

G7/19

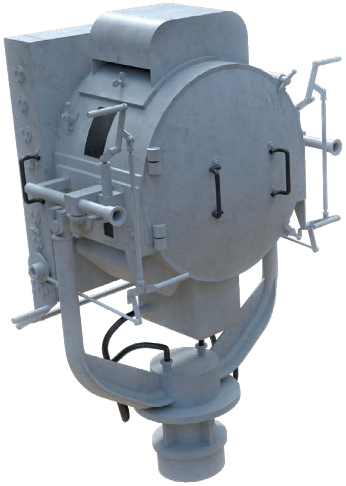

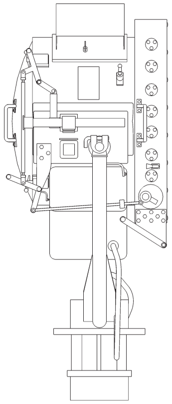

G7/16

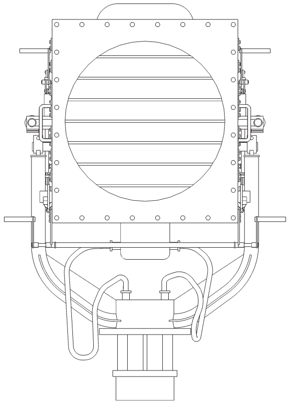

G7/17

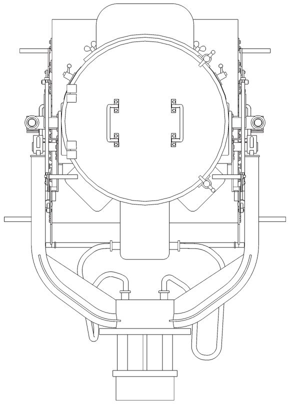

G7/18

ARADO AR 196 A FLOATPLANE (1/75 SCALE)

H1/1 RIGHT PROFILE, A-3 VARIANT

H1/2 LEFT PROFILE, A-3 VARIANT

H1/3 FUSELAGE SECTIONS

H1/1–13 ARADO AR 196 A FLOATPLANE

1 20mm MG FF (not present in the A-1 variant)
2 7.92mm MG 17 (not present in the A-1 variant)
3 7.92mm MG 15 (stowed position)
4 50kg bomb rack
5 Propeller spinner (not present in the A-1 and A-2 variants)

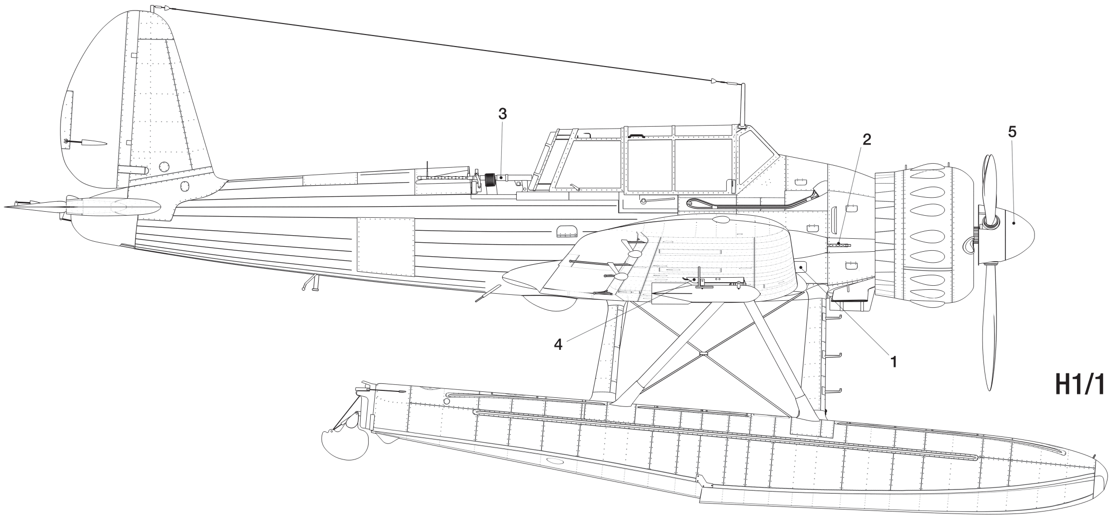

H1/1

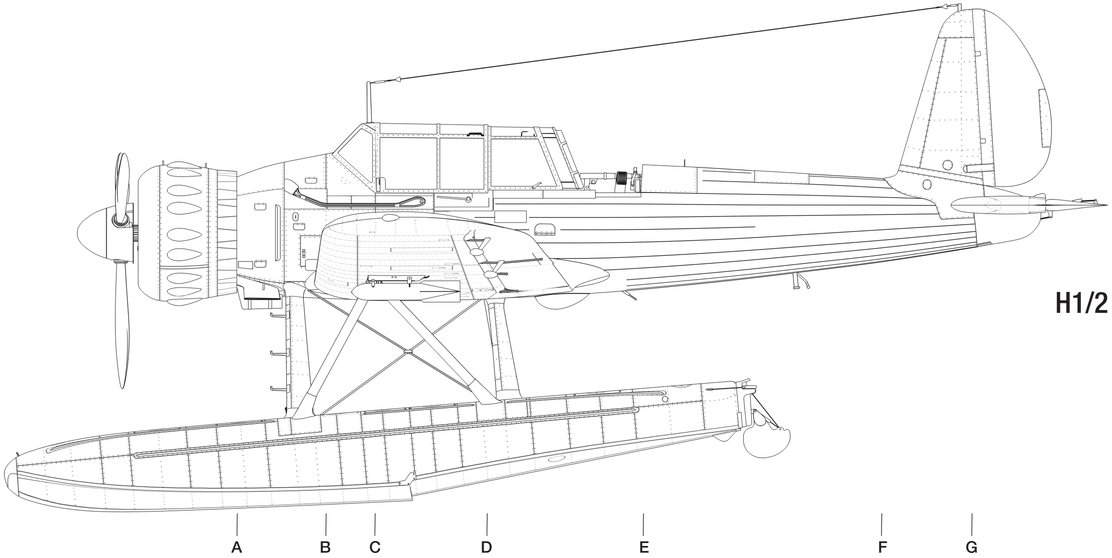

H1/2

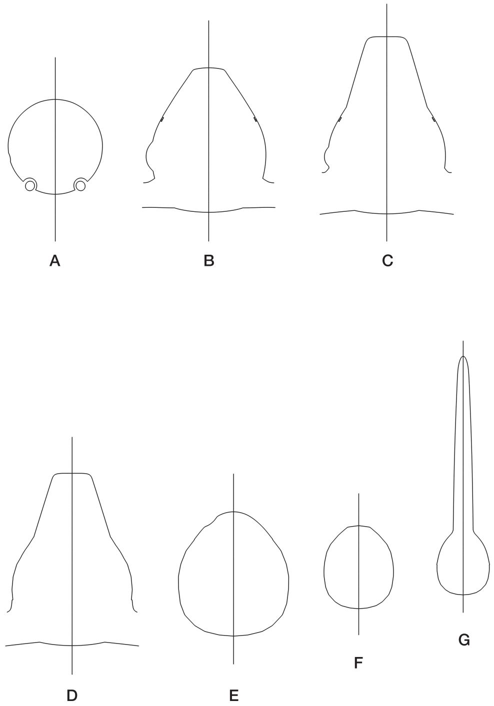

H1/3

Board aircraft of *Scharnhorst*		
Time period	Fuselage markings	Aircraft variant
Mid-1939	T3+LH	Ar 196 A-1
November 1939, sinking of HMS *Rawalpindi*	T3+DH T3+EH T3+FH	Ar 196 A-1 Ar 196 A-1 Ar 196 A-1
February 1940, Operation *Nordmark*	T3+HH T3+NH	Ar 196 A-2 Ar 196 A-2
April 1940, Operation *Weserübung*	T3+KH T3+HH T3+AH	Ar 196 A-2 Ar 196 A-2 Ar 196 A-2

Board aircraft of *Scharnhorst* (cont.)		
June 1940, Operation *Juno*	T3+SH T3+BK	Ar 196 A-2 Ar 196 A-2
March 1941, Operation *Berlin*	T3+HH T3+DH	Ar 196 A-2 Ar 196 A-2
Summer 1941, at Brest	T3+GH	Ar 196 A-3
Spring 1943, in Norway	T3+EH	Ar 196 A-3
September 1943, Operation *Sizilien*	T3+IK T3+KH T3+EK	Ar 196 A-3 Ar 196 A-3 Ar 196 A-5

H1/4 FRONT VIEW, A-3 VARIANT
H1/5 BACK VIEW, A-3 VARIANT (FRAGMENT)

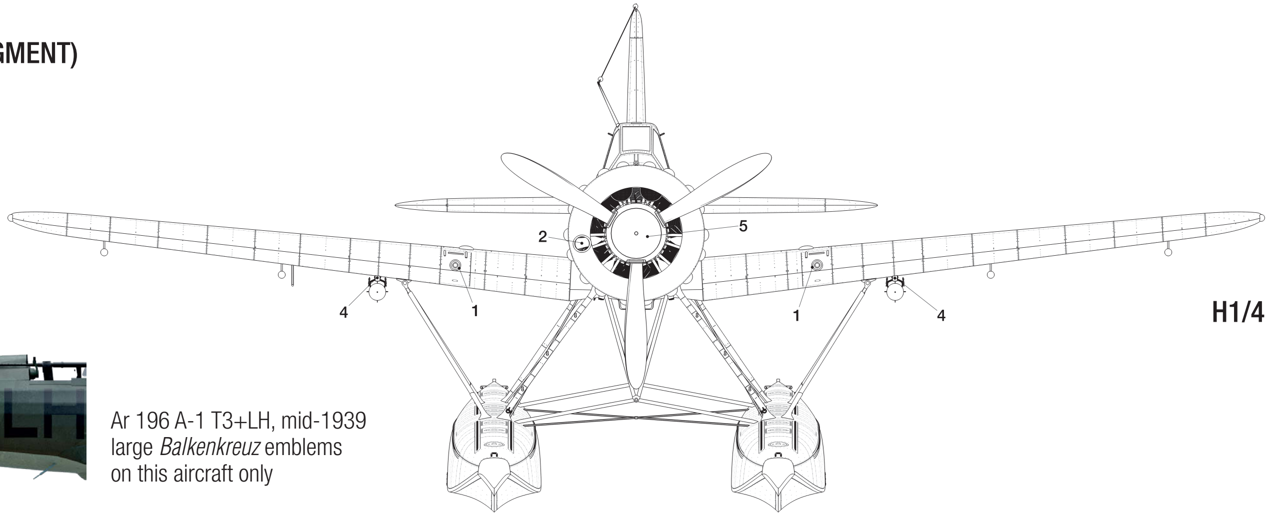

H1/4

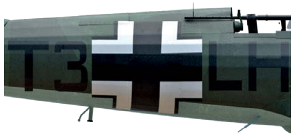

Ar 196 A-1 T3+LH, mid-1939
large *Balkenkreuz* emblems
on this aircraft only

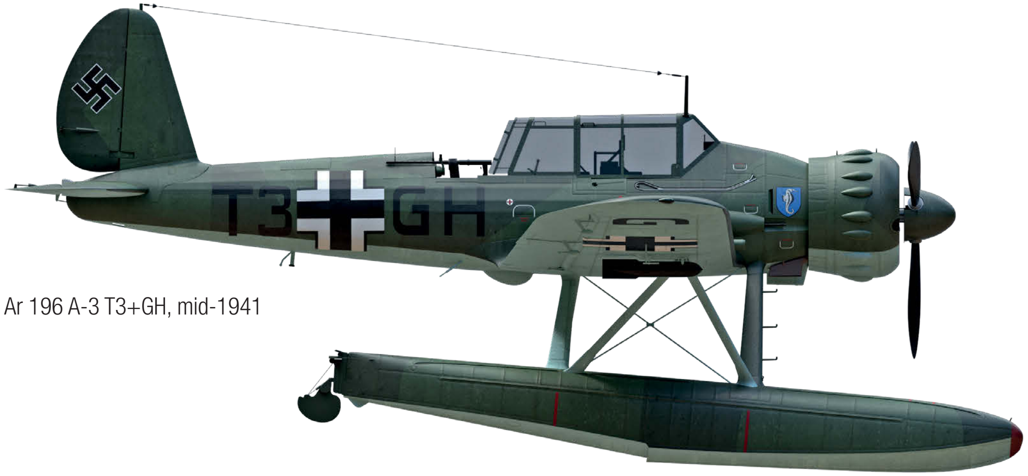

Ar 196 A-3 T3+GH, mid-1941

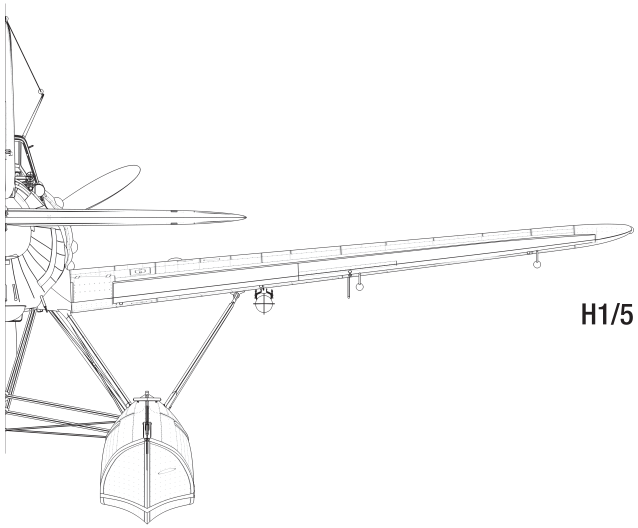

H1/5

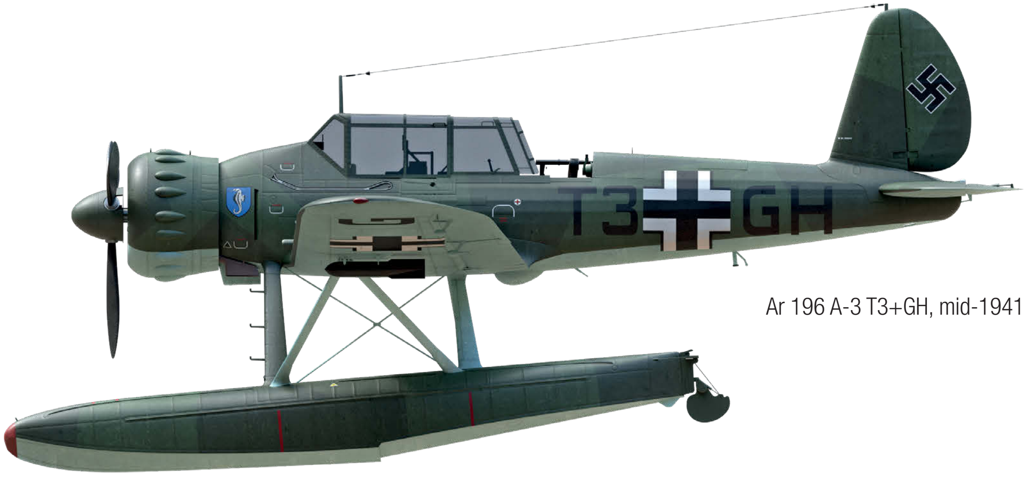

Ar 196 A-3 T3+GH, mid-1941

ARADO AR 196 A FLOATPLANE (1/75 SCALE)

H1/6 PLAN, A-3 VARIANT
H1/7 BOTTOM VIEW, A-3 VARIANT (FRAGMENT)

H1/7

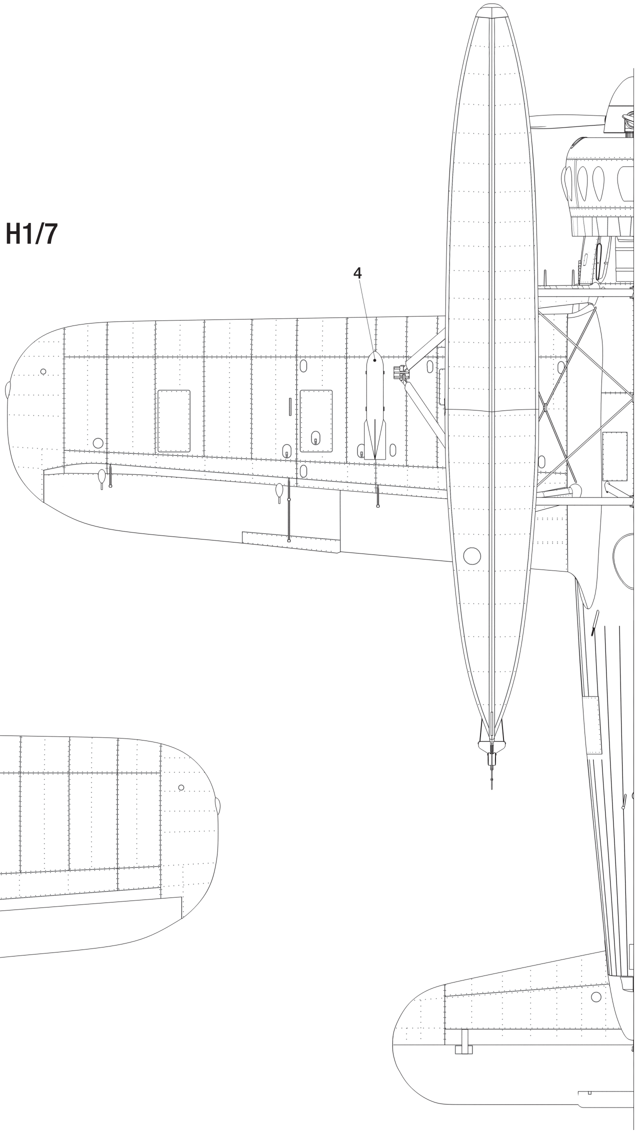

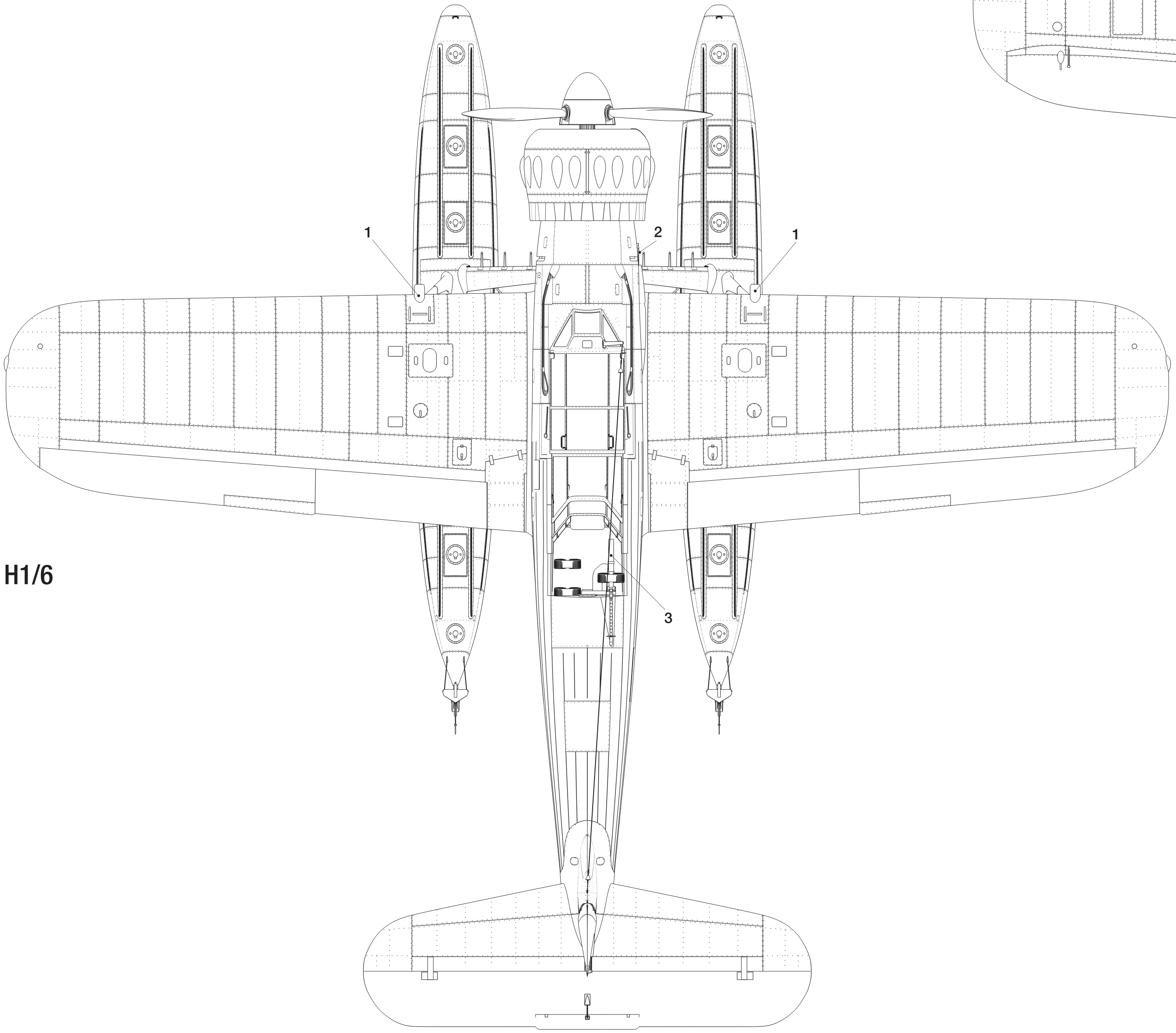

H1/6

Ar 196 A-3 T3+GH, mid-1941

Ar 196 A-1 T3+LH, mid-1939
large *Balkenkreuz* emblems
on this aircraft only

Ar 196 A-1 T3+LH, mid-1939
large *Balkenkreuz* emblems
on this aircraft only

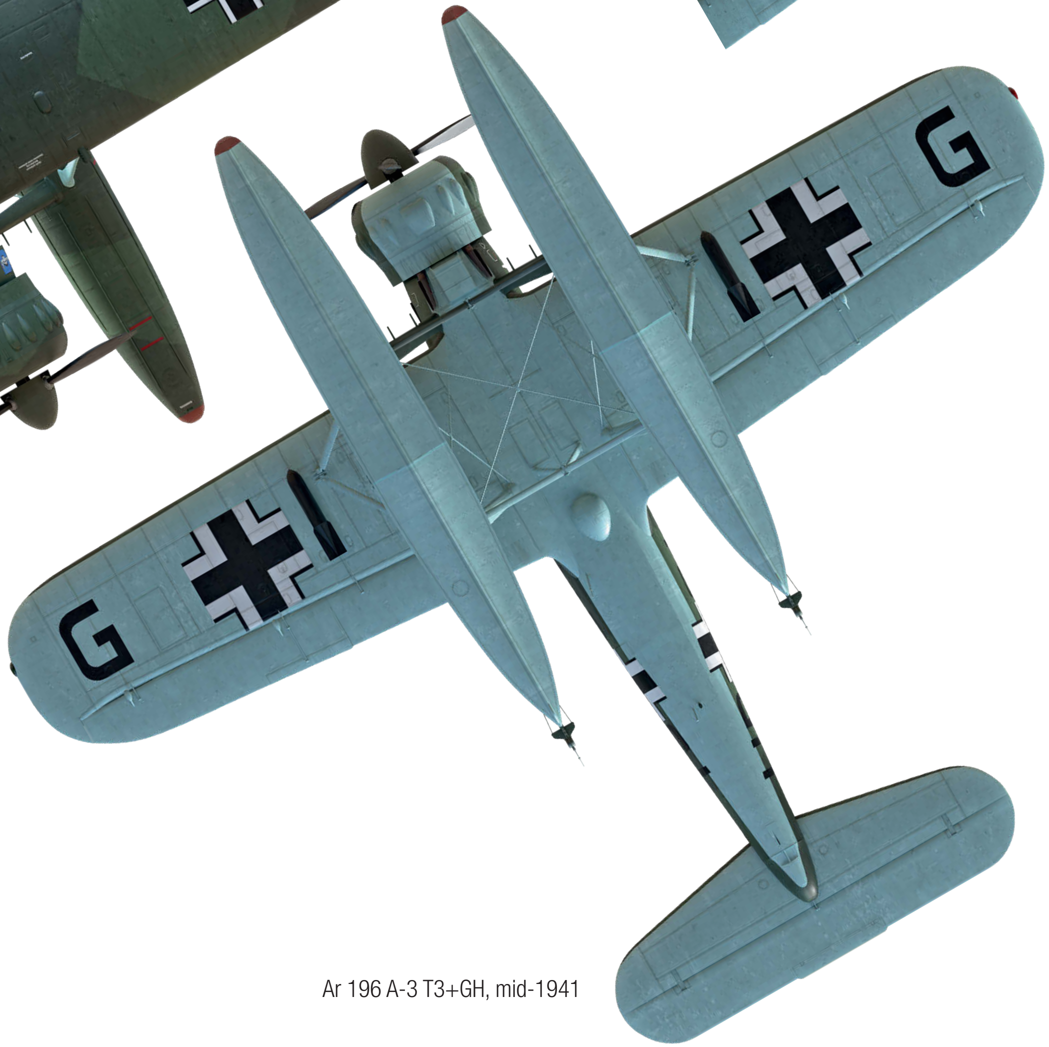
Ar 196 A-3 T3+GH, mid-1941

ARADO AR 196 A FLOATPLANE (1/75 SCALE)

H1/8 RIGHT PROFILE, A-1 VARIANT (FRAGMENT)
H1/9 FRONT VIEW, A-1 VARIANT (FRAGMENT)
H1/10 PLAN, A-1 VARIANT (FRAGMENT)

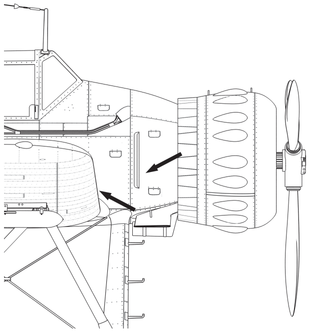

H1/8

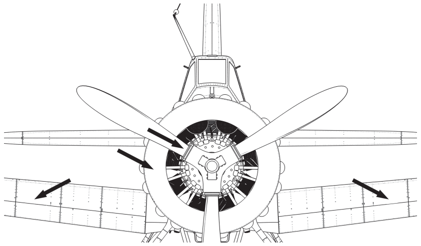

H1/9

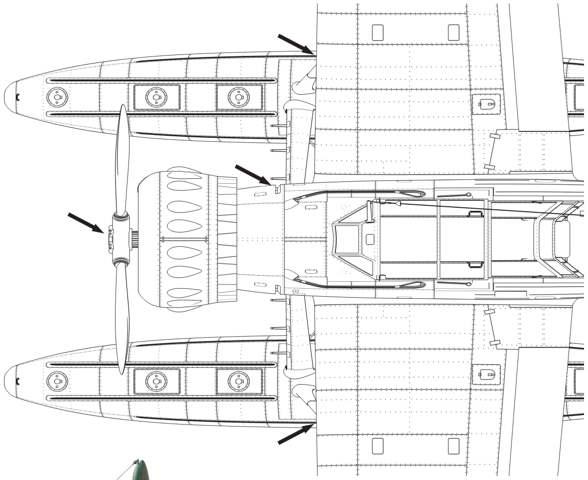

H1/10

Ar 196 A-1 T3+LH, mid-1939
large *Balkenkreuz* emblems
on this aircraft only

Ar 196 A-2 T3+HH, March 1941

H1/11 LEFT PROFILE WITH FOLDED WINGS, A-2 VARIANT
H1/12 FRONT VIEW WITH FOLDED WINGS, A-2 VARIANT (FRAGMENT)
H1/13 PLAN WITH FOLDED WINGS, A-2 VARIANT (FRAGMENT)

Ar 196 A-3 T3+GH, mid-1941

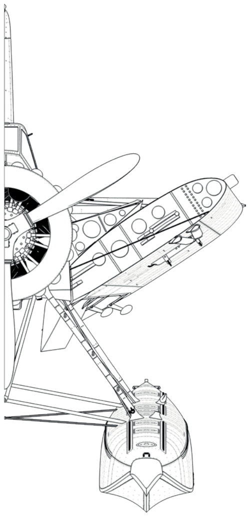

H1/12

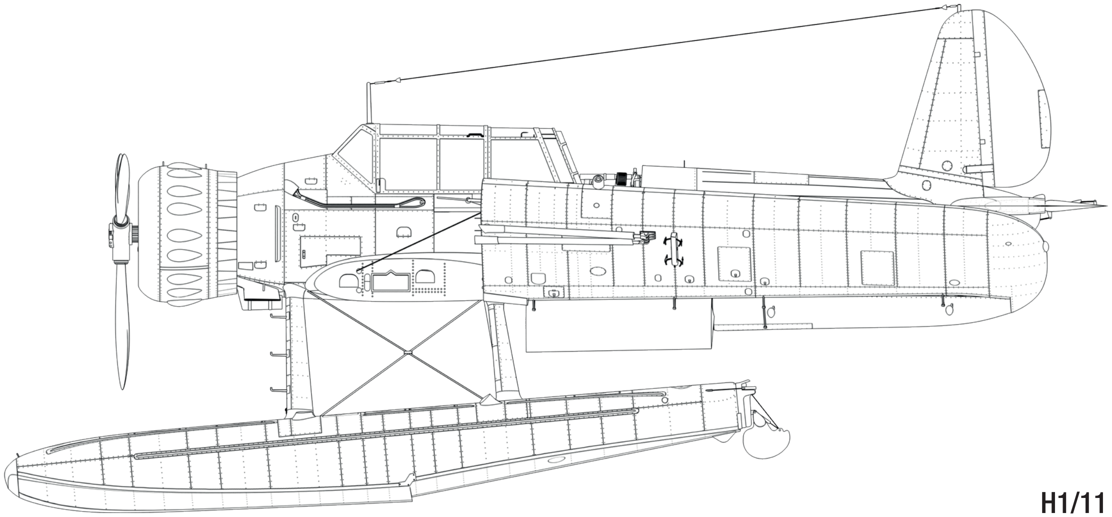

H1/11

Ar 196 A-3 T3+GH, mid-1941

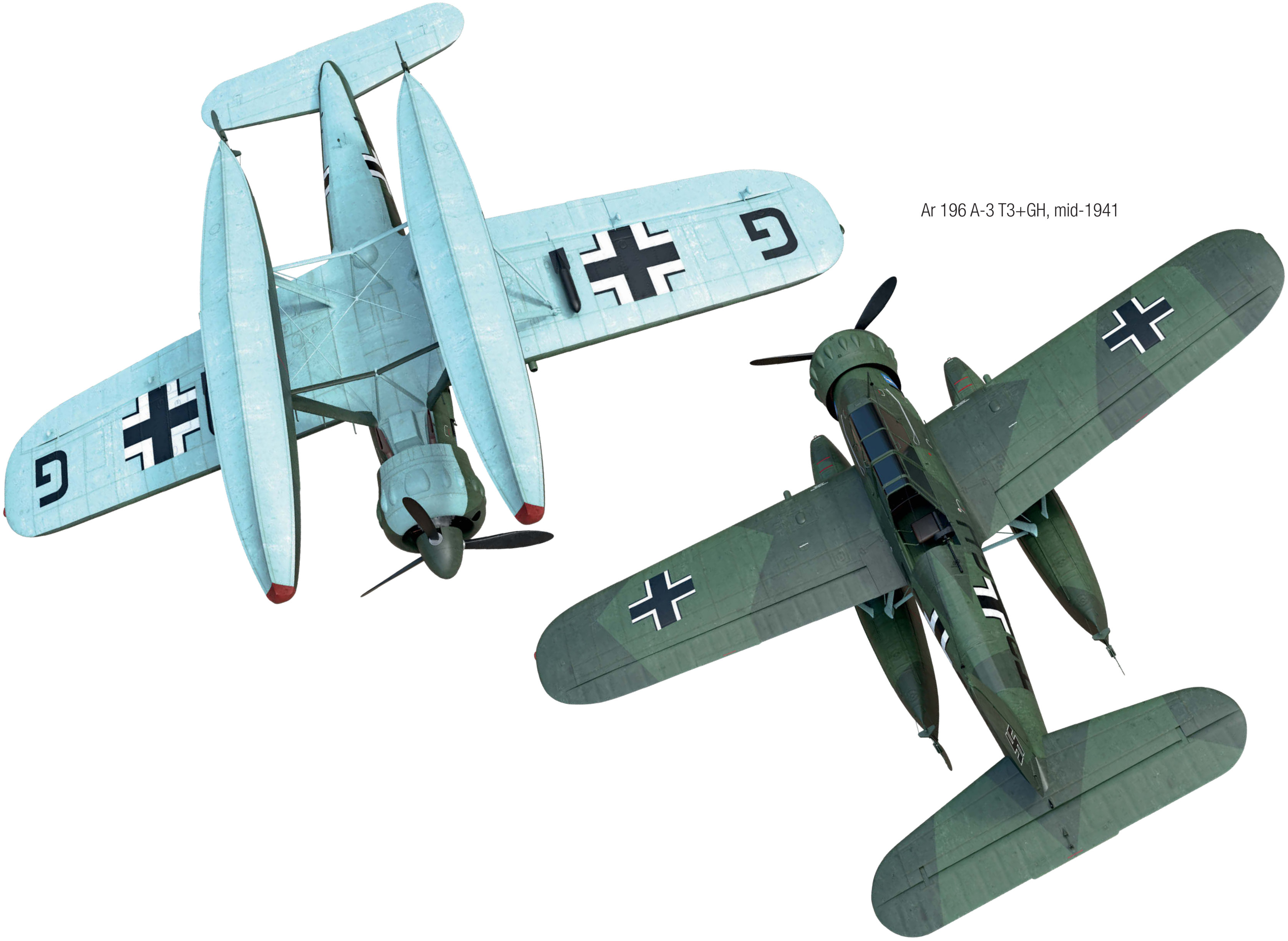

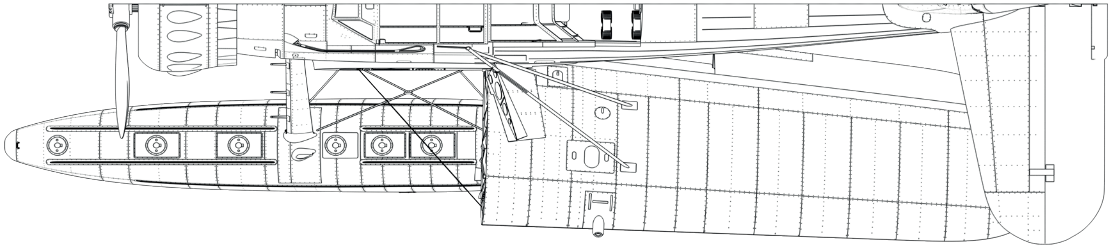

H1/13

AIRCRAFT CATAPULT (1/125 SCALE)

H1/14 RIGHT PROFILE
H1/15 LEFT PROFILE
H1/16 FRONT VIEW

H1/14–18 AIRCRAFT CATAPULT

1. Service platform
2. Catapult control panel
3. Floatplane stowage cradle
4. Takeoff trolley
5. Compressed air tank
6. Rotary base

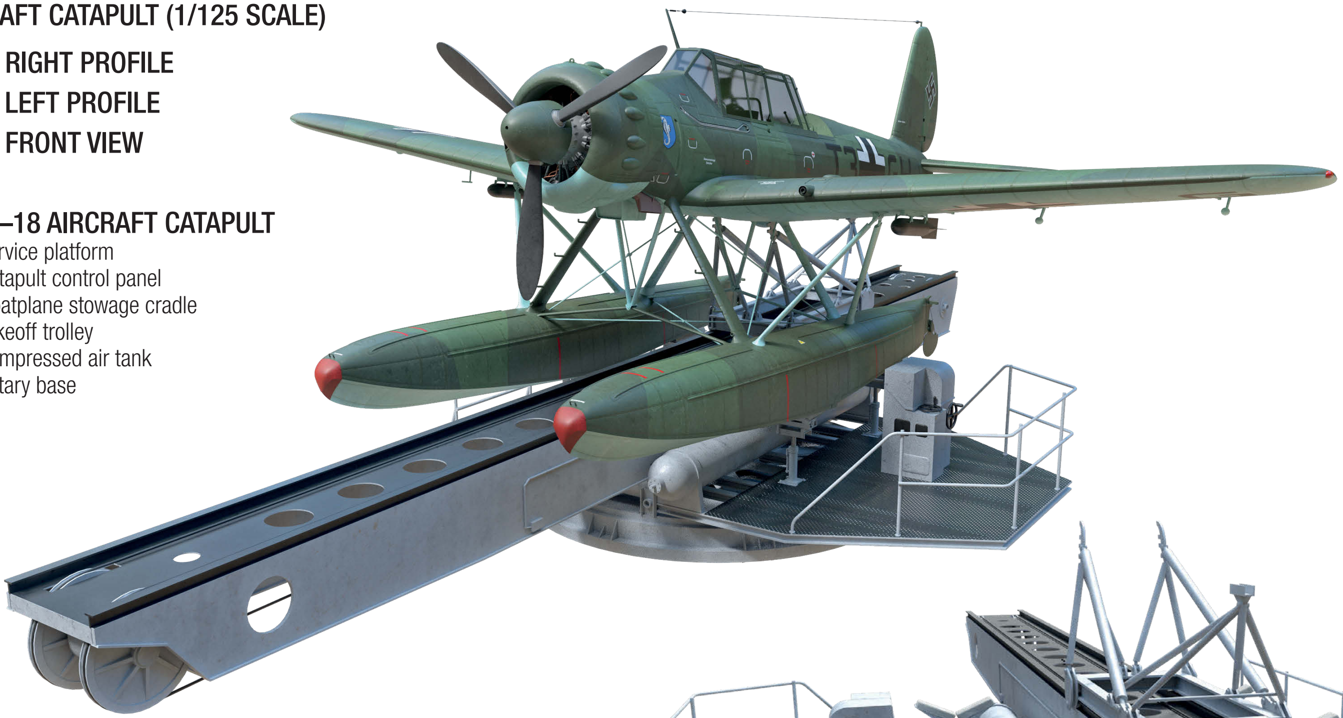

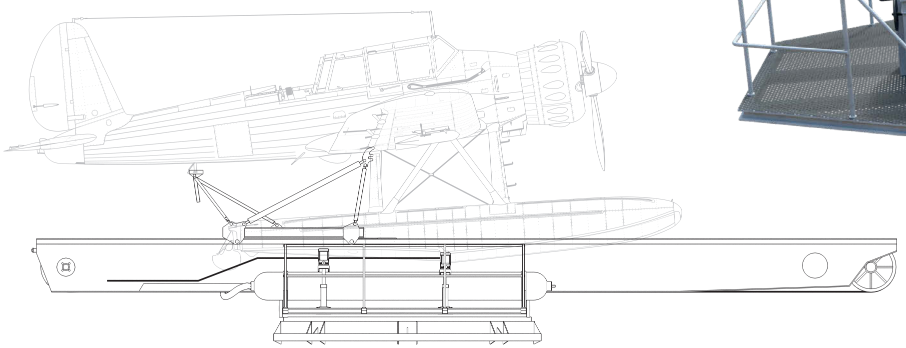

H1/14

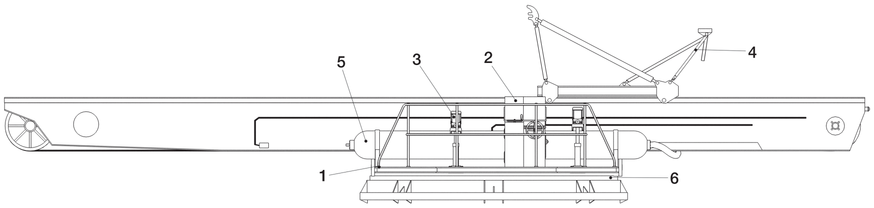

H1/15

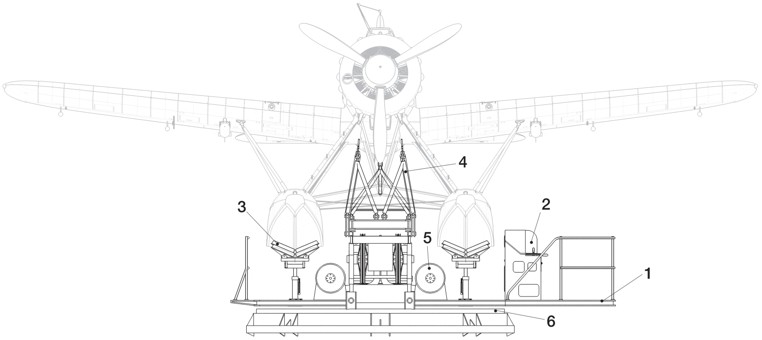

H1/16

H1/17 BACK VIEW
H1/18 PLAN

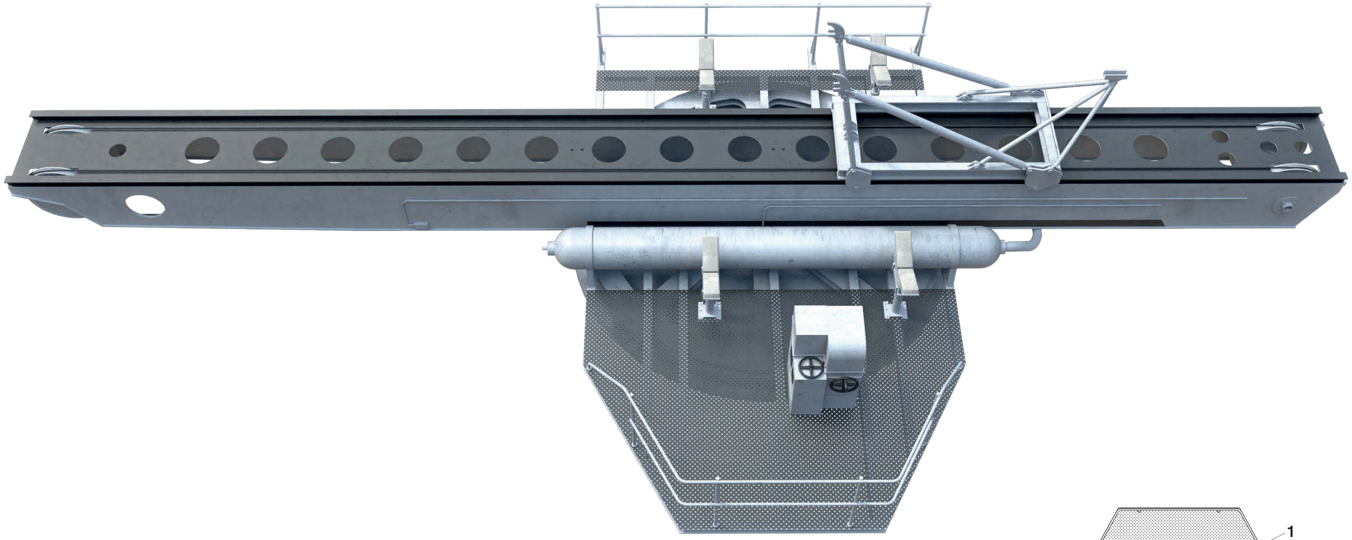

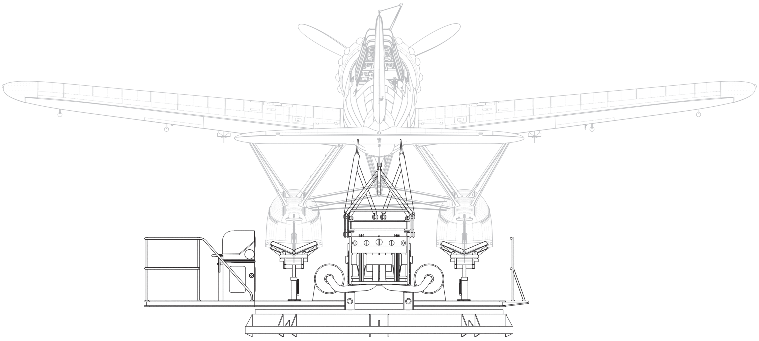

H1/17

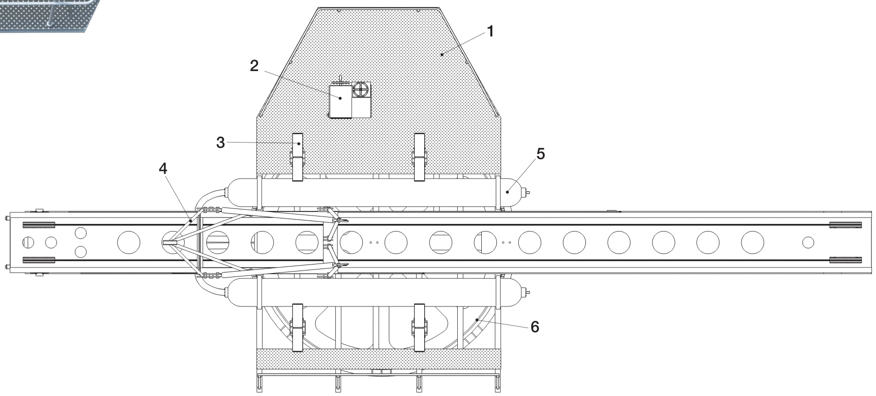

H1/18

ADMIRAL'S BOAT – *ADMIRALSBOOT* (1/75 SCALE)

I1/1 PROFILE
I1/2 PLAN
I1/3 FRONT VIEW
I1/4 BACK VIEW
I1/5 BODY PLAN

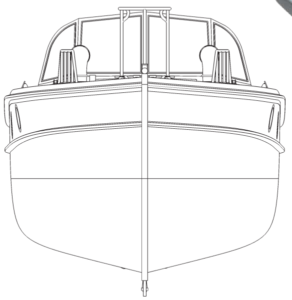

I1/3

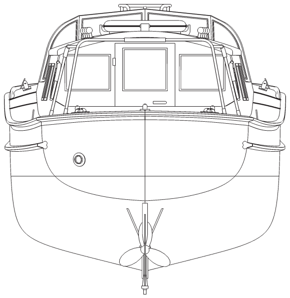

I1/4

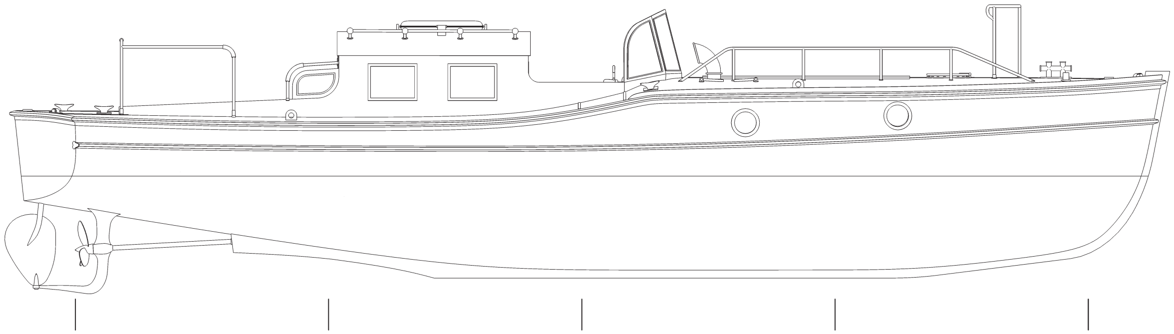

I1/1

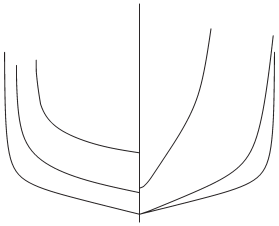

I1/5

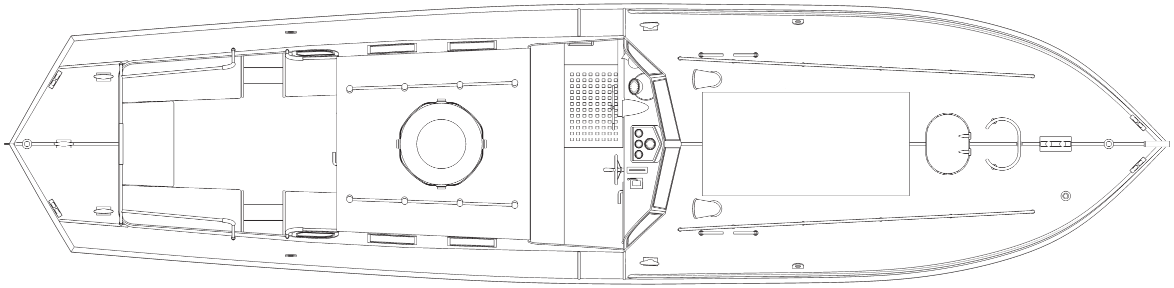

I1/2

TRANSPORTATION BOAT – *VERKEHRSBOOT* (1/75 SCALE)

I2/1 PROFILE

I2/2 PLAN

I2/3 PLAN WITH CANVAS COVER OMITTED FOR CLARITY (FRAGMENT)

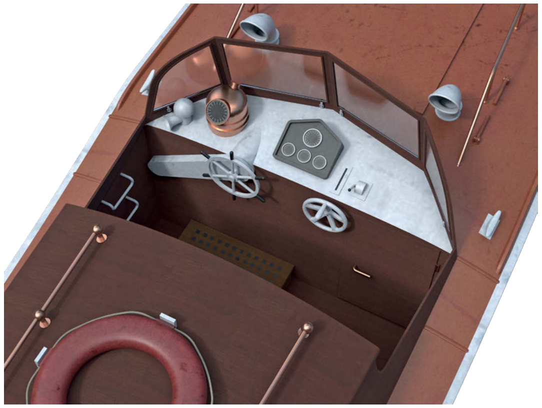

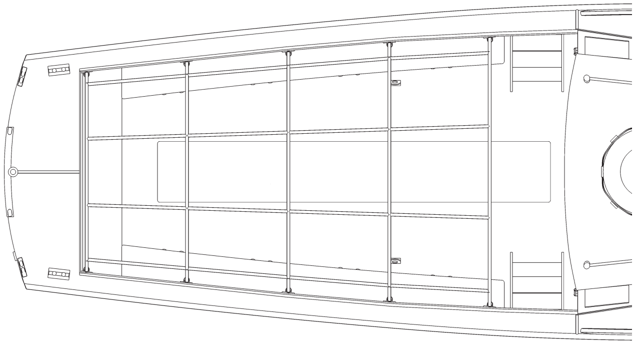

I2/3

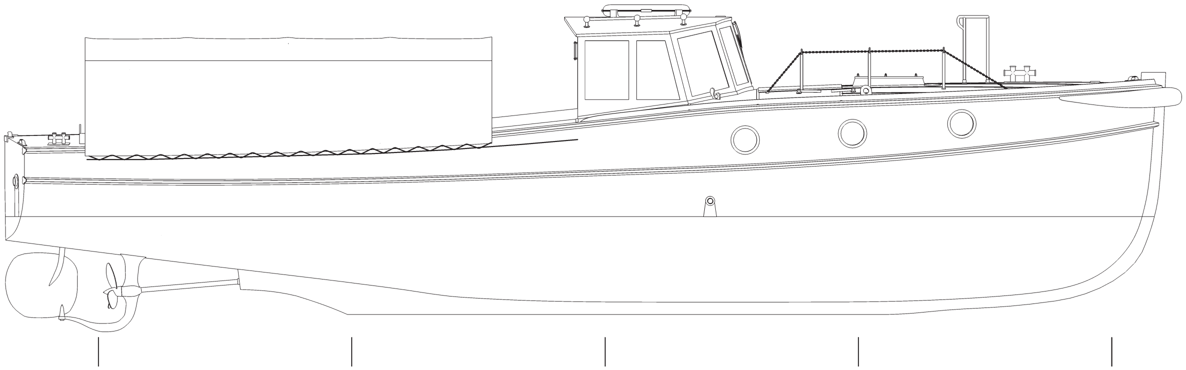

I2/1

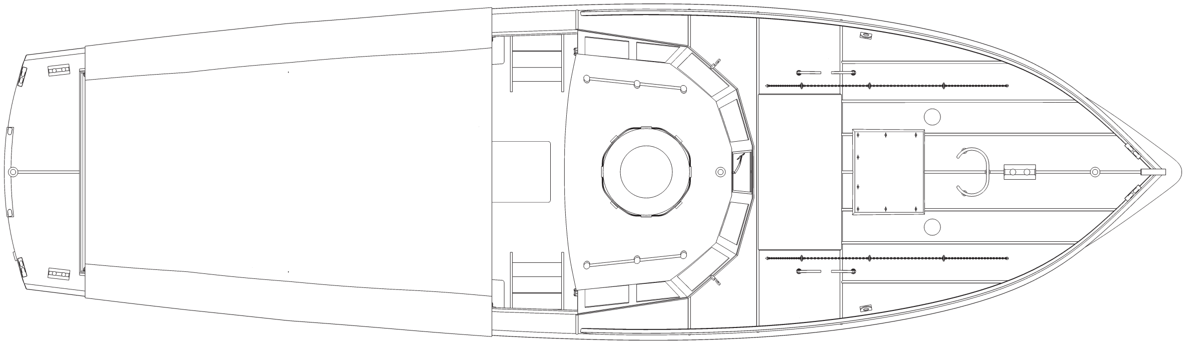

I2/2

TRANSPORTATION BOAT – *VERKEHRSBOOT* (1/75 SCALE)

I2/4 FRONT VIEW
I2/5 BACK VIEW
I2/6 BACK VIEW WITH CANVAS COVER OMITTED FOR CLARITY
I2/7 BODY PLAN

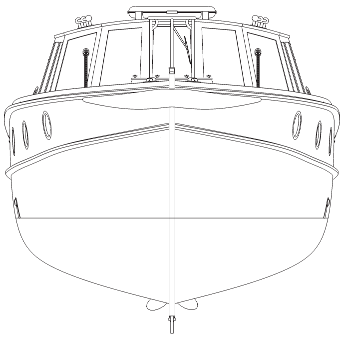

I2/4

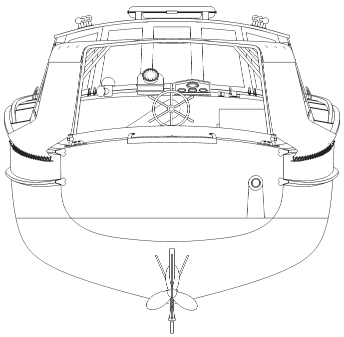

I2/5

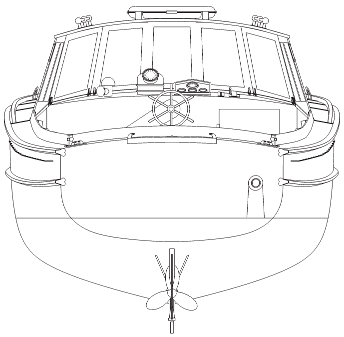

I2/6

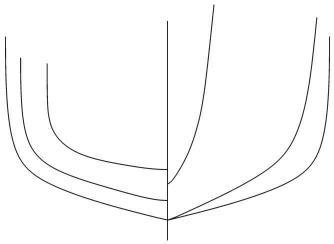

I2/7

MOTOR PINNACE – *MOTORPINASSE* (1/75 SCALE)

I3/1 PROFILE

I3/2 PLAN

I3/3 FRONT VIEW

I3/4 BACK VIEW

I3/5 BODY PLAN

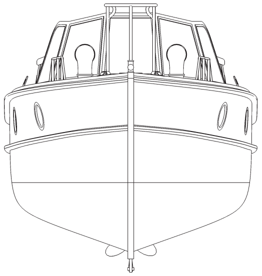

I3/3

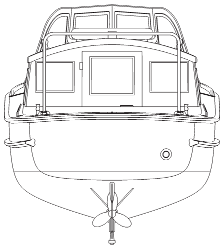

I3/4

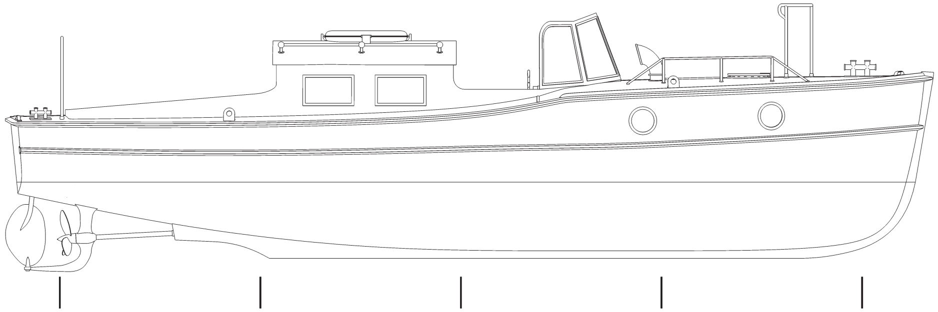

I3/1

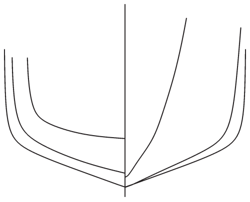

I3/5

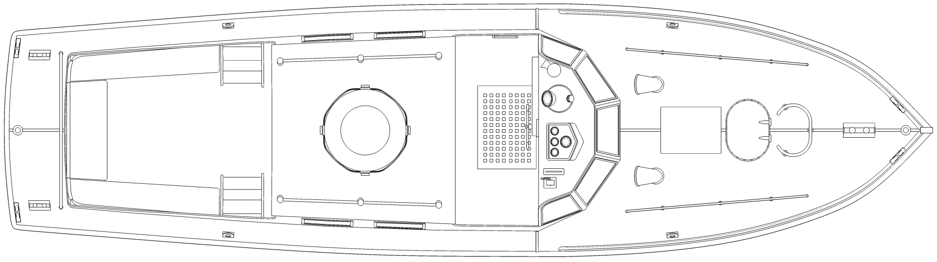

I3/2

MOTOR YAWL – *MOTORJOLLE* (1/75 SCALE)

I4/1 PROFILE
I4/2 PLAN
I4/3 FRONT VIEW
I4/4 BACK VIEW
I4/5 BODY PLAN

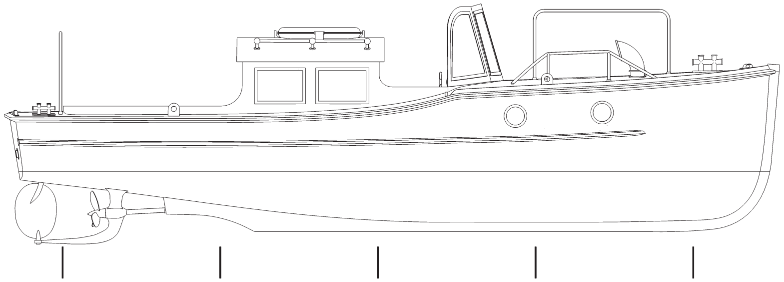

I4/1

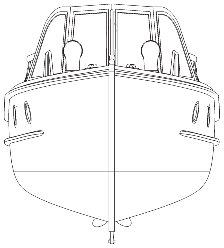

I4/3

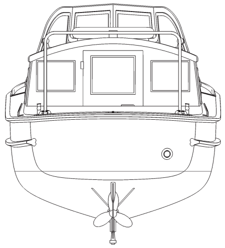

I4/4

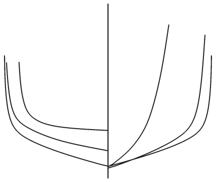

I4/5

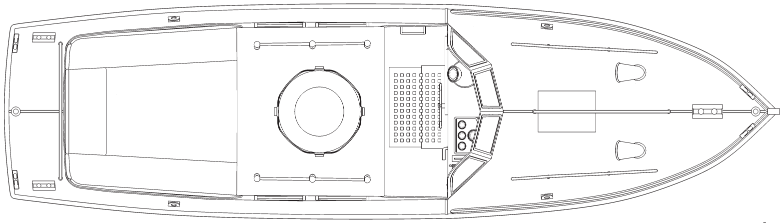

I4/2

ROW CUTTER, 2ND CLASS – *KUTTER KLASSE II* (1/75 SCALE)

I5/1 PROFILE

1 Ship's crest (removed from all cutters in September 1939)

I5/2 INTERNAL PROFILE
I5/3 PLAN
I5/4 FRONT VIEW
I5/5 BACK VIEW
I5/6 BODY PLAN
I5/7 BOAT CRADLE

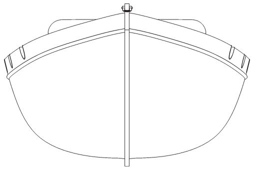

I5/4

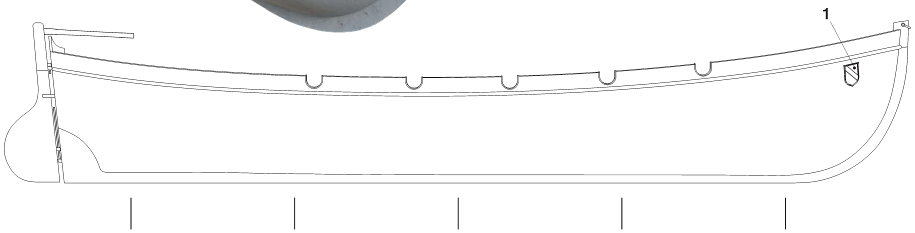

I5/1

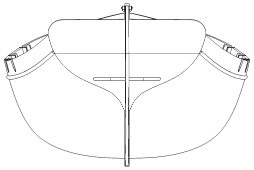

I5/5

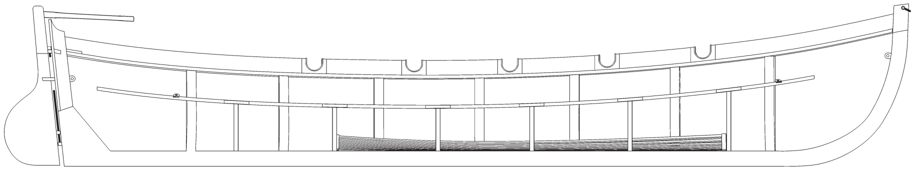

I5/2

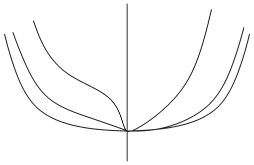

I5/6

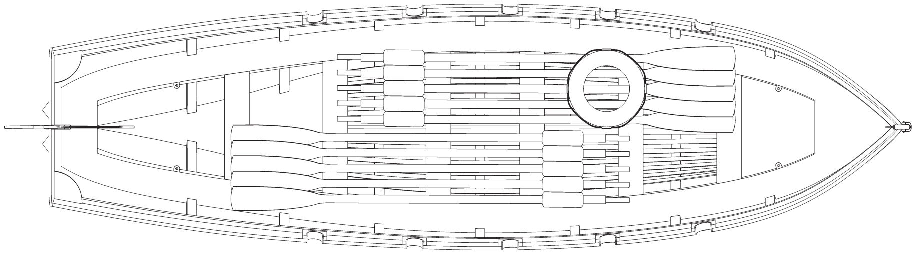

I5/3

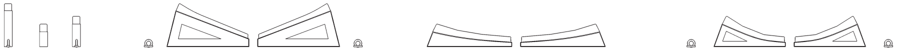

I5/7

ROW YAWL, 1ST CLASS – *JOLLE KLASSE I* (1/75 SCALE)

I6/1 PROFILE
I6/2 INTERNAL PROFILE
I6/3 PLAN
I6/4 FRONT VIEW
I6/5 BACK VIEW
I6/6 BODY PLAN
I6/7 BOAT CRADLE

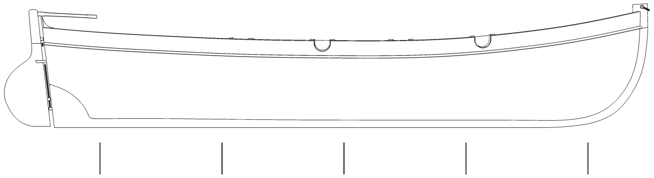

I6/1

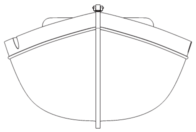

I6/4

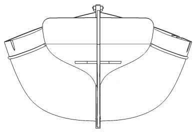

I6/5

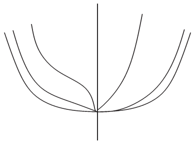

I6/6

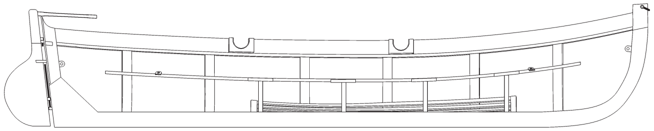

I6/2

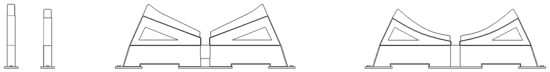

I6/7

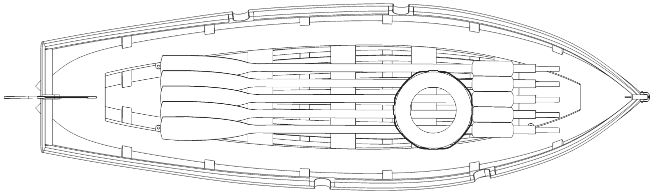

I6/3

ROW DINGHY – *DINGI* (1/75 SCALE)

I7/1 PROFILE
I7/2 INTERNAL PROFILE
I7/3 PLAN
I7/4 FRONT VIEW
I7/5 BACK VIEW
I7/6 BODY PLAN
I7/7 BOAT CRADLE

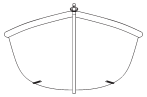

I7/4

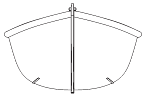

I7/5

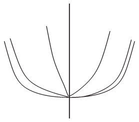

I7/6

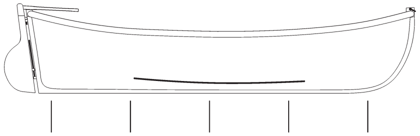

I7/1

I7/7

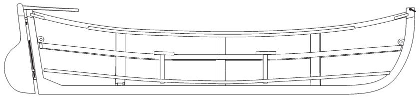

I7/2

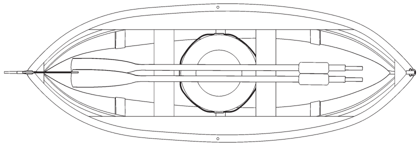

I7/3

LIFE RAFT TYPE 1 (1/75 SCALE)

I8/1 PROFILE
I8/2 PLAN
I8/3 BOTTOM VIEW

I8/1

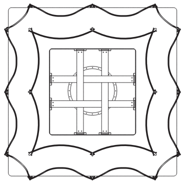

I8/2

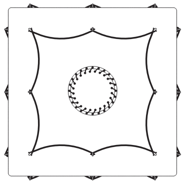

I8/3

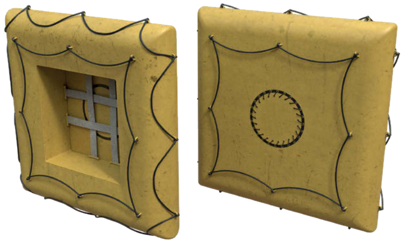

LIFE RAFT TYPE 2 (1/75 SCALE)

I8/4 PROFILE
I8/5 FRONT VIEW
I8/6 PLAN

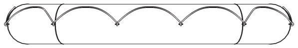

I8/4

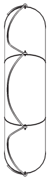

I8/5

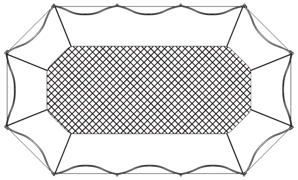

I8/6

BIBLIOGRAPHY

Asmussen, John & Leon, Eric, *German Naval Camouflage, Volume One, 1939–1941*, Seaforth Publishing, Barnsley (2012), 978-1-84832-142-7

Asmussen, John & Leon, Eric, *German Naval Camouflage, Volume Two, 1942–1945*, Seaforth Publishing, Barnsley (2014), 978-1-84832-223-3

Backer, Steve, *ShipCraft 20, Scharnhorst and Gneisenau*, Seaforth Publishing, Barnsley (2012), 978-1-84832-152-6

Bonomi, Antonio & Virtuani, Alberto, *Storia Militare Briefing n. 15, Gli incrociatori da battaglia Scharnhorst e Gneisenau*, (2019)

Breyer, Siegfried, *Marine Arsenal Band 24, Die Schlachtschiffe der Scharnhorst-Klasse*, Podzun-Pallas-Verlag, Friedberg (1993), 3-7909-0491-0

Breyer, Siegfried, *Marine Arsenal Band 3, Schlachtschiff Scharnhorst*, Podzun-Pallas-Verlag, Friedberg (1987), 3-7909-0315-9

Federowicz, Przemysław, *Pancerniki Typu Scharnhorst*, Wydawnictwo Okręty Wojenne, Tarnowskie Góry (2008), 978-83-61069-02-7

Goss, Chris & Rauchbach, Bernd, *Luftwaffe Seaplanes 1939–1945, An Illustrated History*, Crécy Publishing, Manchester (2002), 0-947554-93-9

Koop, Gerhard & Schmolke, Klaus-Peter, *Battleship Scharnhorst*, Conway Maritime Press, London (1998), 0-85177-772-4

Murawski Marek J., *Działania bojowe niemieckich samolotów pokładowych w II wojnie światowej, Wojsko i Technika - Historia, numer specjalny 6/2018*, Wydawnictwo ZBiAM, Warszawa (2018), ISSN 2450-3495

Schmalenbach, Paul, *Warship Profile 33, German Battlecruisers Scharnhorst and Gneisenau*, Profile Publications, Windsor (1973)

Skwiot, Mirosław, *German Naval Artillery*, vol. I, AJ-Press, Gdańsk (2004), 83-7237-149-0

Skwiot, Mirosław, *German Naval Artillery*, vol. II, AJ-Press, Gdańsk (2005), 83-7237-170-9

Skwiot, Mirosław, *German Naval Artillery*, vol. III, AJ-Press, Gdańsk (2007), 978-83-7237-193-5

Skwiot, Mirosław, *German Naval Artillery*, vol. IV, AJ-Press, Gdańsk (2010), 978-83-7237-217-8

Skwiot, Mirosław, *Pancerniki typu Bismarck cz. 5. Bismarck, Tirpitz*, AJ-Press, Gdańsk (2003), 83-7237-078-8

Shoker, Randall S., *Battleship Scharnhorst: The Crew Photo Album*, Oxford Museum Press, Oxford, Ohio (2000), 978-1-930127-00-6

Trojca, Halina & Trojca, Waldemar, *Pancerniki Scharnhorst, Gneisenau*, Wydawnictwo Militaria, Warszawa (1994), 83-86209-07-0

Wiper, Steve, *Warship Pictorial #36. Kriegsmarine Scharnhorst*, Classic Warships Publishing, Tucson, AZ (2011), 978-0-9823583-7-5

Wiper, Steve, *Warship Pictorial #39. German Battleships 1939–1945*, Classic Warships Publishing, Tucson, AZ (2012), 978-0-9857149-1-8

WEBSITES

http://scharnhorst-class.dk – Scharnhorst & Gneisenau

http://navweaps.com – Naval Weapons, Naval Technology and Naval Reunions